M L K Recreation Center Moisture Intrusion

PERMANENT STORM WATER BMP CATEGORY:

- ☐ PRIORITY DEVELOPMENT PROJECT
- ■ STANDARD DEVELOPMENT PROJECT
- ☐ PDP EXEMPT
- ☐ NOT SUBJECT TO PERMANENT STORM WATER REQUIRMENTS

CONTRACTOR'S RESPONSIBILITIES

1. PURSUANT TO SECTION 4216 OF THE CALIFORNIA GOVERNMENT CODE, AT LEAST 2 WORKING DAYS PRIOR TO EXCAVATION, YOU MUST CONTACT THE REGIONAL NOTIFICATION CENTER (E.G., UNDERGROUND SERVICE ALERT OF SOUTHERN CALIFORNIA) AND OBTAIN AN INQUIRY IDENTIFICATION NUMBER.
2. NOTIFY SDG&E AT LEAST 10 WORKING DAYS PRIOR TO EXCAVATING WITHIN 10' OF SDG&E UNDERGROUND HIGH VOLTAGE TRANSMISSION POWER LINES. (I.E., 69 KV & HIGHER)

CONSTRUCTION STORM WATER PROTECTION NOTES

1. TOTAL SITE DISTURBANCE AREA (ACRES) 0.11 AC
   HYDROLOGIC UNIT/ WATERSHED PUEBLO SAN DIEGO/SAN DIEGO BAY
   HYDROLOGIC SUBAREA NAME & NO. EL TOYAN – 908.31
2. THE CONTRACTOR SHALL COMPLY WITH THE REQUIREMENTS OF THE
   - ☒ WPCP
     THE PROJECT IS SUBJECT TO MUNICIPAL STORM WATER PERMIT NO. R9–2013–0001 AS AMENDED BY R9–2015–0001 AND R9–2015–0100
   - ☐ SWPPP
     THE PROJECT IS SUBJECT TO MUNICIPAL STORM WATER PERMIT NO. R9–2013–0001 AS AMENDED BY R9–2015–0001 AND R9–2015–0100 AND CONSTRUCTION GENERAL PERMIT ORDER 2009–0009–DWQ AS AMENDED BY ORDER 2010–0014–DWQ AND 2012–0006–DWQ
     TRADITIONAL: RISK LEVEL ☐1 ☐ 2☐3
     LUP: RISK TYPE ☐1 ☐ 2 ☐ 3
3. CONSTRUCTION SITE PRIORITY
   ☐ ASBS ☐ HIGH ☐ MEDIUM ☒ LOW

MONUMENTATION/SURVEY NOTES

THIS MAP WAS CREATED FROM A PARCEL LAYER AND DOES NOT DEPICT THE ACTUAL LOCATION OF THE PROPERTY LINES. NO BOUNDARY ANALYSIS WAS PERFORMED. THE SURVEY MONUMENTS HAVE BEEN LOCATED BY SURVEY GRADE MEASUREMENTS, AND ARE SHOWN FOR INFORMATIONAL PURPOSES ONLY. THE CITY OF SAN DIEGO LAND SURVEYORS SHALL REPLACE SUCH MONUMENTS WITH APPROPRIATE MONUMENTS. WHEN SETTING SURVEY MONUMENTS USED FOR RE–ESTABLISHMENT OF THE DISTURBED CONTROLLING SURVEY MONUMENTS AS REQUIRED BY SECTIONS 6730.2 AND 8771 OF THE BUSINESS AND PROFESSIONS CODE OF THE STATE OF CALIFORNIA, A CORNER RECORD OR RECORD OF SURVEY, AS APPROPRIATE, SHALL BE FILED WITH THE COUNTY SURVEYOR. IF ANY HORIZONTAL OR VERTICAL CONTROL IS TO BE DISTURBED OR DESTROYED, THE CITY OF SAN DIEGO FIELD SURVEY SECTION SHALL BE NOTIFIED IN WRITING AT LEAST 7 DAYS PRIOR TO CONSTRUCTION. THE CONTRACTOR SHALL BE RESPONSIBLE FOR THE COST OF REPLACING ANY HORIZONTAL CONTROL AND VERTICAL CONTROL BENCHMARKS DESTROYED BY THE CONSTRUCTION IF THE CITY OF SAN DIEGO SURVEY SECTION IS NOT NOTIFIED PRIOR TO CONSTRUCTION. THE FILING OF A CORNER RECORD OR RECORD OF SURVEY, AS APPROPRIATE SHALL BE FILED WITH COUNTY SURVEYOR.A COPY OF THE FILED DOCUMENT SHALL BE FURNISHED TO THE CITY OF SAN DIEGO SURVEY SECTION.

ABBREVIATIONS

Ø	DIAMETER
&	AND
℄	CENTERLINE
#	POUND OR NUMBER
A.B.	ANCHOR BOLT
ABV.	ABOVE
ACOUST.	ACOUSTICAL
A.C.	ASHPALT CONCRETE
ADJ.	ADJUSTABLE
A.F.F.	ABOVE FINISH FLOOR
A.F.G.	ABOVE FINISH GRADE
ALUM.	ALUMINUM
A.G.	ANTI-GRAFFITI
ARCH.	ARCHITECTURAL
BD.	BOARD
BLDG.	BUILDING
BLKG.	BLOCKING
BM.	BEAM
BMP	BEST MANAGEMENT PRACTICES
B.O.B.	BOTTOM OF BEAM
BOT.	BOTTOM
BTWN.	BETWEEN
CAB.	CABINET
C.B.	CATCH BASIN
C.F.O.I.	CONTRACTOR FURNISHED OWNER INSTALLED
C.I.P.	CAST IN PLACE
CJ	COLD JOINT
C.J.	CONTROL JOINT
C.L.	CHAIN LINK
CLG.	CEILING
CLR.	CLEAR
CMU	CONCRETE MASONRY
C.O.	CLEAN OUT
COL.	COLUMN
COMP.	COMPOSITION
CONC.	CONCRETE
CONN.	CONNECTION
CONSTR.	CONSTRUCTION
CONT.	CONTINUOUS
CORR.	CORRIDOOR
C.O.T.	CENTER OF TRUSS
C.T.	CERAMIC TILE
DBL.	DOUBLE
DEMO.	DEMOLITION
DF.	DOUGLAS FIR
D.F.	DRINKING FOUNTAIN
D.F.C.I.	DISTRICT FURNISHED, CONTRACTOR INSTALLED
DG	DECOMPOSED GRANITE
DIA.	DIAMETER
DIAG.	DIAGONAL
DIM.	DIMENSION
DISP.	DISPENSER
DN.	DOWN
DR.	DOOR
D.S.	DOWN SPOUT
DWG	DRAWING
E	EXISTING
EA	EACH
EJ	EXPANSION JOINT
ELECT.	ELECTRICAL
ELEV.	ELEVATION
ENCL.	ENCLOSURE
EQ.	EQUAL
EQUIP.	EQUIPMENT
EXIST.	EXISTING
EXP.	EXPANSION
EXT.	EXTERIOR
F.B.	FIRE BLANKET
F.D.	FLOOR DRAIN
FDN.	FOUNDATION
F.E.	FIRE EXTINGUISHER
F.E.C.	FIRE EXTINGUISHER CABINET
F.F.	FINISH FLOOR
F.F.E.	FINISH FLOOR ELEVATION
FIN.	FINISH
FLASHG	FLASHING
FLR.	FLOOR
F.O.C.	FACE OF CONCRETE
F.O.F.	FACE OF FINISH
F.O.M.	FACE OF MASONRY
F.O.S.	FACE OF STUD
FRAMG	FRAMING
FRP	FIBERGLASS REINFORCED PANELS
FT.	FOOT OR FEET
FTG.	FOOTING
F.V.	FIELD VERIFY
GA.	GAUGE
GALV.	GALVANIZED
G.I.	GALVANIZED IRON
GL.	GLASS
GLB.	GLU-LAM BEAM
GOVNT	GOVERNMENT
GYP. BD.	GYPSUM BOARD
H.D.	HOLD DOWN
HDWR.	HARDWARE
HDR.	HEADER
HGR.	HANGER
HORIZ.	HORIZONTAL
H.P.	HIGH POINT
H.M.	HOLLOW METAL
HR.	HOUR
HT.	HEIGHT
INSUL.	INSULATION
INT.	INTERIOR
JT.	JOINT
JST.	JOIST
LAM.	LAMINATE
LAV.	LAVATORY
LT.	LIGHT
L.P.	LOW POINT
MFR.	MANUFACTURER
MATRL	MATERIAL
MAX.	MAXIMUM
M.B.	MACHINE BOLT
MECH.	MECHANICAL
MIN.	MINIMUM
MIN	MINUTE
MISC.	MISCELLANEOUS
M.O.	MASONRY OPENING
M.R.	MOISTURE RESISTANT
MTL.	METAL
N	NEW
N.I.C.	NOT IN CONTRACT
NO. OR #	NUMBER
N.T.S.	NOT TO SCALE
O	OVER
O.C.	ON CENTER
O.F.C.I.	OWNER FURNINSHED, CONTRACTOR INSTALLED
O.F.O.I.	OWNER FURNISHED, OWNER INSTALLED
O.H.	OPPOSITE HAND
OPNG	OPENING
OPP.	OPPOSITE
PB	PULL BOX
PERF.	PERFORATED
P.H.	PANIC HARDWARE
PL.	PLATE OR PLASTIC
PLAST.	PLASTER
PLYWD.	PLYWOOD
PR.	PAIR
PROJ.	PROJECTION
P.T.D.F.	PRESSURE TREATED DOUGLAS FIR
R OR RAD	RADIUS
RC	RELATIVE COMPACTION
R.D.	ROOF DRAIN
RECS.	RECOMMENDATIONS
REFL.	REFLECTED
REFRIG.	REFRIGERATOR
REINF.	REINFORCED OR REINFORCEMENT
REQ.	REQUIRED OR REQUIREMENTS
RET.	RETAINING
RF.	ROOF
RM.	ROOM
ROOFG	ROOFING
S.C.	SOLID CORE
SCHED.	SCHEDULE
SDRSD	SAN DIEGO REGIONAL STANDARD DRAWINGS
SEC.	SECTION
SHTG	SHEATHING
SHT.	SHEET
SIM.	SIMILAR
SJ	SAWCUT JOINT
S.M.S	SHEET METAL SCREWS
SQ.	SQUARE
S.S.	STAINLESS STEEL
STD.	STANDARD
STL.	STEEL
STOR.	STORAGE
STRUCT.	STRUCTURAL
SUSP.	SUSPENDED
T.A.	TOILET ACCESSORY
TB	TOP OF BOX
T&B	TOP & BOTTOM
TEL.	TELEPHONE
TEMP.	TEMPERED
TG	TOP OF GATE
TJ	TOOLED JOINT
T.O.	TOP OF
T.O.B.	TOP OF BEAM
T.O.M.	TOP OF MASONRY
T.O.P.	TOP OF PARAPET
TS	TUBE STEEL
T.W.	TOP OF WALL
TYP.	TYPICAL
U.N.O.	UNLESS NOTED OTHERWISE
U.O.N.	UNLESS OTHERWISE NOTED
V.A.T.	VINYL ASPHALT TILE
V.C.T.	VINYL COMPOSITION TILE
VERT.	VERTICAL
V.G.D.F.	VERTICAL GRAIN DOUGLAS FIR
W	WITH
W.C.	WATERCLOSET
WD.	WOOD
W.J.	WEAKENED JOINT
W.P.	WATERPROOF
W.P.B.	WATERPROOF BARRIER
W.P.M.	WATERPROOF MEMBRANE
W.R.	WATER RESISTANT
WT.	WEIGHT
W.W.F.	WELDED WIRE FABRIC

SHEET INDEX

SHEET NO.	DISCIPLINE CODE	TITLE
1	G–1.0	TITLE SHEET
2	G–0.1	GENERAL NOTES
3	G–0.2	ACCESSIBILITY NOTES
4	C–1	GENERAL NOTES
5	C–2	NOTES
6	C–3	EXISTING TOPOGRAPHY PLAN
7	C–4	DEMOLITION PLAN
8	C–5	DEMOLITION PLAN
9	C–6	SITE AND PAVING PLAN
10	C–7	SITE AND PAVING PLAN
11	C–8	GRADING/DRAINAGE PLAN
12	C–9	GRADING/DRAINAGE PLAN
13	C–10	UTILITY PLAN
14	C–11	UTILITY PLAN
15	C–12	CIVIL DETAILS
16	C–13	BMP MAP FOR STANDARD DEVELOPMENT PROJECTS
17	C–14	NOT USED
18	C–15	NOT USED
19	C–16	STORM DRAIN PROFILE LINE
20	AS–1.1	NEW SITE PLAN
21	A–1.1	EXISTING DEMOLITION FLOOR PLAN
22	A–1.2	NEW FLOOR PLAN
23	A–1.3	ENLARGED RESTROOM PLANS & INT. ELEV.
24	A–2.0	BUILDING SECTIONS AND DOOR SCHEDULE
25	AD–1.0	DETAILS
26	AD–2.0	TYPICAL ACCESSIBILITY DETAILS
27	AD–3.0	TYPICAL SIGNAGE DETAILS
28	S–1.0	GENERAL NOTES/SPECIAL INSPECTIONS
29	S–2.0	FLOOR PLAN
30	S–3.0	ELEVATIONS/DETAILS
31	E–0.01	SYMBOLS AND GENERAL NOTES
32	E–3.01	ELECTRICAL FLOOR PLANS
33	P–3.0	ENLARGED RESTROOM PLUMBING PLAN

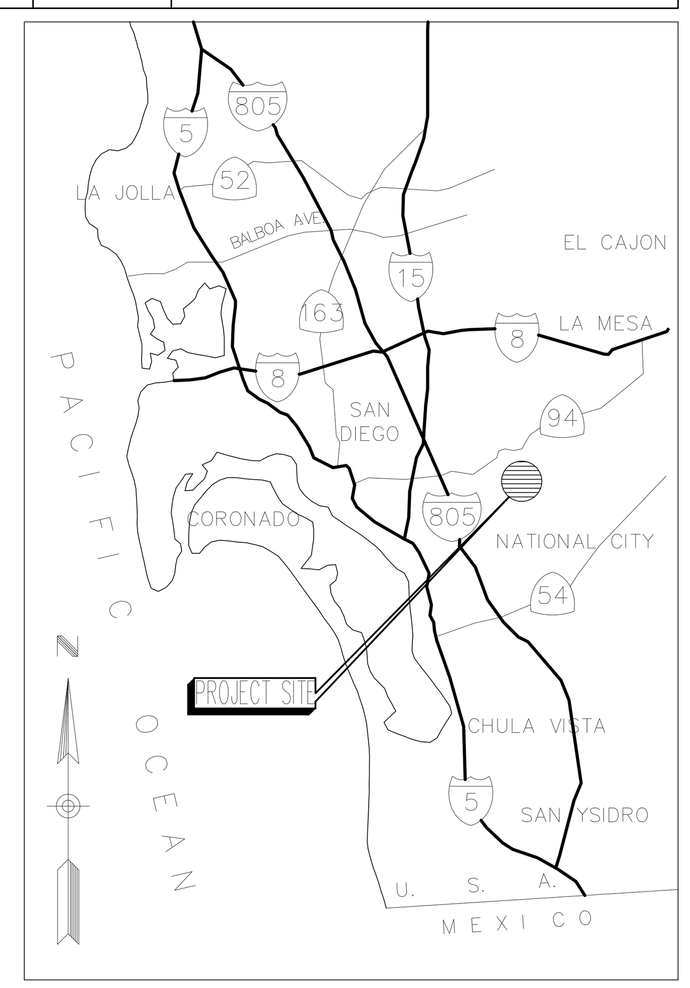

VICINITY MAP
NOT TO SCALE

LEGAL DESCRIPTION:

PORTION OF LOT C OF ENCANTO MAP NO. 749
IN THE CITY OF SAN DIEGO, COUNTY OF SAN DIEGO

SITE ADDRESS

6401 SKYLINE DRIVE
SAN DIEGO, CA 92114

ASSESSOR'S NUMBER

549–420–17

PROJECT DATA

EXISTING USE: COMMUNITY RECREATION CENTER
PROPOSED USE: NO CHANGE
OCCUPANCY: B–2,A–2.1, A–3
CONSTRUCTION TYPE: TYPE VA, NON–SPRINKLERED
GROSS AREA: 14,443 SF
STORIES: 1
YEAR OF CONSTRUCTION: 1987
REFERENCE DRAWINGS: AS–BUILT DWGS – 21582–2–D & 21582–42–D

FIELD DATA

SEE CIVIL SHEET C–1

OWNER

CITY OF SAN DIEGO
525 B STREET, SUITE 750
SAN DIEGO, CA 92101
PHONE NUMBER 619–533–5132
PROJECT MANAGER: RAWSAN SALHA

PROJECT TEAM

ARCHITECT
ROESLING NAKAMURA ARCHITECTS, INC.
ATTN: RALPH ROESLING
363 FIFTH AVENUE, SUITE 202
SAN DIEGO, CA. 92101
T. (619) 233–1023

CIVIL ENGINEER
BDS ENGINEERING, INC.
ATTN: TOM JONES, P.E.
5575 LAKE PARK WAY, SUITE 114
LA MESA, CA. 91942
T. (619) 582–4992

STRUCTURAL ENGINEER
MARTIN & LIBBY STRUCTURAL ENGINEERS
ATTN: JEAN LIBBY, SE.
4452 GLACIER AVE.
SAN DIEGO, CA. 92120
T. (619) 280–9307

MECHANICAL
MA ENGINEERS
ATTN: VINCENT VEGAS
5160 CARROLL CANYON RD., SUITE 200
SAN DIEGO, CA. 92121
T. (858) 200–0030

PLUMBING ENGINEER
MA ENGINEERS
ATTN: RICHARD HERNANDEZ
5160 CARROLL CANYON RD., SUITE 200
SAN DIEGO, CA. 92121
T. (858) 200–0030

ELECTRICAL ENGINEER
BSE ENGINEERING, INC.
ATTN: ALAN BROWN
1060 TREENA STREET, SUITE 100
SAN DIEGO, CA. 92131
T. (858) 279–2000

WORK TO BE DONE

PROJECT CONSISTS OF MITIGATION OF MOISTURE AND WATER INTRUSION IN RACQUETBALL COURTS, MULTI–USE SPACE AND OFFICES. WORK WILL INVOLVE IMPROVEMENTS TO BELOW GRADE STORM DRAIN SYSTEM, RE–GRADING AND REPLACEMENT OF CONCRETE WALKWAYS TO REDIRECT SURFACE WATER AWAY FROM STRUCTURE, REPAIR/ REPLACEMENT OF DAMAGED WOOD STRUCTURE DAMAGED BY WATER INTRUSION, INSTALLATION OF BELOW GRADE WATERPROOFING TO CMU RETAINING WALL, REPLACEMENT OF EXTERIOR FLASHING AND CLADDING TO PROVIDE WEATHER TIGHT CONDITION, REPAIR/REPLACEMENT ROOF DRAINAGE SYSTEM, REPAIR / REPLACEMENT OF INTERIOR FINISHES.

IN ADDITION TO MITIGATION OF WATER INTRUSION RELATED ITEMS LISTED ABOVE, THE FOLLOWING AREAS WILL BE MODIFIED TO MEET THE 2010 ADA STANDARD CODE.
- ACCESSIBLE PATH OF TRAVEL FROM ACCESSIBLE PARKING TO THE PRIMARY ENTRANCE
- PUBLIC TOILET FACILITIES, DRINKING FOUNTAINS AND ASSOCIATED ACCESS SIGNAGE.
- ACCESSIBLE SIGNAGE REQUIRED FOR ACCESS IMPROVEMENTS LISTED ABOVE.

REFERENCE 2021 CITY STANDARD DRAWINGS/2021 GREEN BOOK & WHITE BOOK

APPLICABLE STANDARDS

CONSTRUCTION SHALL COMPLY WITH THE FOLLOWING PARTS OF THE TITLE 24 OF THE CALIFORNIA CODE OF REGULATIONS (CCR):
2016 BUILDING STANDARDS ADMINISTRATIVE CODE PART 1, TITLE 24 C.C.R.
2016 CALIFORNIA BUILDING CODE (CBC), PART 2, TITLE 24 C.C.R.;
2016 CALIFORNIA ELECTRICAL CODE (CEC) PART 3, TITLE 24 C.C.R.;
2016 CALIFORNIA MECHANICAL CODE (CMC), PART 4, TITLE 24 C.C.R.;
2016 CALIFORNIA PLUMBING CODE (CPC), PART 5, TITLE 24 C.C.R.;
2016 CALIFORNIA ENERGY CODE (CPC), PART 6, TITLE 24 C.C.R.;
2016 CALIFORNIA FIRE CODE (CFC), PART 9, TITLE 24 C.C.R.;
2016 CALIFORNIA REFERENCED STANDARDS CODE, PART 12, TITLE 24 C.C.R.
2016 TITLE 19, C.C.R, PUBLIC SAFETY, STATE FIRE MARSHAL REGULATIONS
2006 NFPA 253 CRITICAL RADIANT FLUX OF FLOOR COVERING SYSTEMS
2008 NFPA 2001 CLEAN AGENT FIRE EXTINGUISHING SYSTEMS
2016 CALIFORNIA GREEN BUILDING STANDARDS CODE
REFERENCE CODE SECTION FOR NFPA STANDARDS – CBC (SFM) 3504.1
AMERICAN WITH DISABILITIES ACT (ADA), TITLE II, ADA STANDARDS FOR ACCESSIBLE DESIGN

LEGEND

- PROPERTY LINE
- 78 — NEW OR FINISHED CONTOURS
- 71 — EXISTING CONTOURS
- INDICATES SLOPE → SLOPING SURFACE
- 2 / A4 — DETAIL NUMBER / SHEET DETAIL APPEARS ON
- C / A4 — SECTION NUMBER / SHEET SECTION APPEARS ON
- 26 — DOOR NUMBER
- 26 — WINDOW NUMBER
- CONCRETE
- SOIL
- CONCRETE MASONRY UNIT
- PLYWOOD
- STEEL
- WOOD BLOCKING
- WOOD CONTINUOUS MEMBER
- GYP. BD.
- PLASTER OR STUCCO
- WORK POINT, CONNECTION POINT DATUM POINT OR CONTROL POINT
- 1 — INTERIOR ELEVATION
- A2–4.0 (1, 2, 3, 4) — SHEET ELEVATION APPEARS ON
- 1029 — ROOM NUMBER
- NEW CONSTRUCTION
- EXISTING TO REMAIN
- FINISH MATERIAL TO ALIGN
- 12 — KEY NOTE
- 101A — DOOR NUMBER REFERENCE
- 1 — WINDOW NUMBER REFERENCE
- 4A — WALL TYPE REFERENCE
- A — SIGN TYPE REFERENCE
- ALIGN FINISHES
- DOT DIMENSION INDICATES CENTERLINE
- TICK MARK DIMENSION INDICATES F.O. STUD OR F.O. STRUCTURAL
- ARROW DIMENSION INDICATES FACE OF FINISH

DECLARATION OF RESPONSIBLE CHARGE

* I HEREBY DECLARE THAT I AM THE ARCHITECT OF RECORD FOR THIS PROJECT THAT I HAVE EXERCISED RESPONSIBLE CHARGE OVER THE DESIGN OF THE PROJECT AS DEFINED IN SECTION 6703 OF THE BUSINESS AND PROFESSIONS CODE AND THAT THE DESIGN IS CONSISTENT WITH CURRENT STANDARDS. I UNDERSTAND THAT THE CHECK OF PROJECT DRAWINGS AND SPECIFICATIONS BY THE CITY OF SAN DIEGO IS CONFINED TO A REVIEW ONLY AND DOES NOT RELIEVE ME, THE ARCHITECT OF RECORD, OF MY RESPONSIBILITIES FOR PROJECT DESIGN.

RALPH J. ROESLING (ARCHITECT'S NAME) 07-29-2021 DATE

AS–BUILT INFORMATION	
MATERIALS	MANUFACTURER
–	–
–	–
–	–
–	–

CONSULTANT

SPEC. NO. 1945

G-1.0

PLANS FOR THE CONSTRUCTION OF
MLK Recreation Center Moisture Intrusion

TITLE SHEET

CITY OF SAN DIEGO, CALIFORNIA
PUBLIC WORKS DEPARTMENT
SHEET 1 OF 33 SHEETS

WBS B 19001

CONSTRUCTION CHANGE / ADDENDUM			
CHANGE	DATE	AFFECTED OR ADDED SHEET NUMBERS	APPROVAL NO.

WARNING
0 1
IF THIS BAR DOES NOT MEASURE 1" THEN DRAWING IS NOT TO SCALE.

The City of SAN DIEGO
Engineering & Capital Projects

ROESLING NAKAMURA TERADA ARCHITECTS
ROESLING NAKAMURA TERADA ARCHITECTS INC
363 Fifth Avenue
San Diego, California 92101
P619.233.1023
www.rntarchitects.com

LICENSED ARCHITECT
RALPH J. ROESLING
NO. C 10987
REN. 2-28-21
STATE OF CALIFORNIA
07-29-2021

APPROVED:
FOR CITY ENGINEER DATE
ELIZABETH SCHROTH–NICHOLS C–80228
DEPUTY CITY ENGINEER RCE#

DESCRIPTION	BY	APPROVED	DATE	FILMED
ORIGINAL	RNT			

SUBMITTED BY: DELFA GENOVA, PROJECT MANAGER
CHECKED BY: REZA RASHIDIAN, PROJECT ENGINEER

194–1749 CCS27 COORDINATE
1834–6309 CCS83 COORDINATE

CONTRACTOR ______ DATE STARTED ______
INSPECTOR ______ DATE COMPLETED ______

40821–1–D

MLK Recreation Center Moisture Intrusion

GENERAL NOTES

1. THE PROJECT SPECIFICATIONS ISSUED AS PART OF THESE CONSTRUCTION DOCUMENTS ARE AN INTEGRAL PART OF THE CONTRACT DOCUMENTS.

2. THE CONTRACTOR SHALL BE RESPONSIBLE FOR MAINTAINING THAT ALL WORKMANSHIP, MATERIALS AND CONSTRUCTION SHALL BE IN COMPLIANCE WITH THE APPLICABLE CODES AND FEDERAL REQUIREMENTS AND REGULATIONS.

3. THE CONTRACTOR SHALL VISIT THE SITE AND VERIFY ALL DIMENSIONS PRIOR TO SUBMITTING A BID. THE CONTRACTOR IS ALSO RESPONSIBLE FOR OBTAINING ALL REQUIRED PERMITS.

4. THE CONTRACTOR SHALL VERIFY ALL EXISTING CONDITIONS, GRADES, ELEVATIONS AND DIMENSIONS BEFORE STARTING WORK. THE ARCHITECT SHALL BE NOTIFIED IMMEDIATELY OF ANY DISCREPANCIES OR INCONSISTENCIES.

5. THE CONTRACTOR SHALL DETERMINE THE LOCATION OF ALL EXISTING UTILITY SERVICES IN THE AREA TO BE EXCAVATED PRIOR TO THE BEGINNING OF EXCAVATION. THE CONTRACTOR SHALL PROTECT ALL UTILITY LINES, SERVICE LINES TO REMAIN WHICH ARE ENCOUNTERED DURING CONSTRUCTION.

6. THE CONTRACTOR SHALL BE RESPONSIBLE FOR THE ENFORCEMENT OF FEDERAL AND STATE OF CALIFORNIA OCCUPATIONAL SAFETY AND HEALTH ADMINISTRATION REQUIREMENTS AND REGULATIONS.

7. DO NOT SCALE ANY DRAWINGS IN THIS SET.

8. ALL DIMENSIONS SHALL TAKE PRECEDENCE OVER SCALE SHOWN ON PLANS, SECTIONS AND DETAILS. SPECIFIC NOTES AND DETAILS SHALL TAKE PRECEDENCE OVER GENERAL NOTES AND TYPICAL DETAILS.

9. SPECIFICATIONS SHALL TAKE PRECEDENCE OVER THE MATERIAL NOTES AND DRAWINGS.

10. ALL OMISSIONS AND CONFLICTS BETWEEN THE VARIOUS ELEMENTS OF THE WORKING DRAWINGS AND/OR SPECIFICATIONS SHALL BE BROUGHT TO THE ATTENTION OF THE ARCHITECT IMMEDIATELY BEFORE PROCEEDING WITH ANY WORK SO INVOLVED. NO CHANGES ARE TO BE MADE UNLESS THE ARCHITECT AND THE OWNER ARE NOTIFIED IN WRITING AND APPROVE SUCH A CHANGE ACCORDING TO THE CONTRACT.

11. THE ARCHITECT IS NOT RESPONSIBLE FOR ASBESTOS ABATEMENT OR ANY OTHER HAZARDOUS MATERIALS.

12. PROVIDE BACKING AT ALL INDICATED FIXTURES, TOILET ACCESSORIES, SIGNS, HANDRAILS, ETC. LOCATIONS.

13. DURING CONSTRUCTION PERIOD, MATERIALS OF CONSTRUCTION SHALL BE SPREAD OUT IF PLACED ON FRAMED FLOORS OR ROOF. THE LOAD SHALL NOT EXCEED THE DESIGN LIVE LOADS FOR EACH PARTICULAR LEVEL.

14. TRADE NAMES AND MANUFACTURERS REFERRED TO ARE FOR QUALITY STANDARDS ONLY. SUBSTITUTIONS WILL BE PERMITTED AS APPROVED BY THE OWNER, AND THE ARCHITECT ONLY UPON SUBMITTALS, AND FOR A LIMITED PERIOD.

15. ITEMS SHOWN AS N.I.C. ON PLANS MAY REQUIRE SEPARATE SUBMITTALS, APPROVALS AND PERMITS. INSTALLING CONTRACTOR(S) IS RESPONSIBLE FOR OBTAINING PERMITS FOR SUCH ITEMS.

16. CONTRACTOR SHALL VERIFY MIN. 2% SITE DRAINAGE TO DRAINAGE INLETS. EXCEPTION: CROSS SLOPE OF ACCESSIBLE PATH OF TRAVEL SHALL BE 2% MAX.

17. CONTRACTOR SHALL VERIFY ALL FLOOR FINISH MATERIALS WILL BE FLUSH WITH ADJACENT WALKING SURFACES, PRIOR TO INSTALLATION.

18. CONTRACTOR SHALL ENSURE ALL FINISH MATERIALS BE FLUSH WHERE NEW FINISH SURFACE MATERIAL JOIN EXISTING TO PROVIDE SMOOTH TRANSITION.

19. SAFETY GLAZING IN HAZARDOUS LOCATIONS SUCH AS GLASS DOORS, GLAZING ADJACENT TO SUCH DOORS AND GLAZING ADJACENT TO WALKWAY SURFACES TO COMPLY WITH SECTIONS 2406 AND 2406.4.6 C.B.C., APPLICABLE EDITION.

20. GRADING PLANS, DRAINAGE IMPROVEMENTS, ROAD AND ACCESS REQUIREMENTS AND ENVIRONMENTAL HEALTH CONSIDERATIONS SHALL COMPLY WITH ALL LOCAL ORDINANCES.

21. ALL WORK SHALL CONFORM TO TITLE 24, CALIFORNIA CODE OF REGULATIONS (CCR).

22. TACTILE EXIT SIGNS SHALL BE REQUIRED PER CBC 11B-703.2

23. CLASS I, II AND III- A LIQUIDS SHALL NOT BE PLACED OR STORED IN ANY OF GROUP "A" OCCUPANCY (CBC SECTION 307.8).

24. NO HAZARDOUS MATERIALS THAT EXCEED THE QUANTITIES LISTED IN UBC TABLES 3D & 3E WILL BE STORED AND OR USED WITHIN BUILDINGS.

25. IF A PORTABLE AUDIO SYSTEM IS USED, PORTABLE LISTENING DEVICES MUST BE PROVIDED PER CBC, SECTION 11B-219.

27. PATH OF TRAVEL (P.O.T.) AS INDICATED IS A BARRIER FREE ACCESS WITHOUT ANY ABRUPT VERTICAL CHANGES EXCEEDING 1/2" AT 1:2 MAXIMUM SLOPE, EXCEPT THAT LEVEL CHANGES DO NOT EXCEED 1/4" VERTICAL. MAX. CROSS-SLOPE 1.5% TYPICAL. THE CONTRACTOR SHALL VERIFY THAT ALL BARRIERS ON THE INDICATED PATH OF TRAVEL HAVE BEEN REMOVED.

28. IN AREAS WHERE SHEATHING IS REMOVED AND TERMITE DAMAGE AND/OR DRY ROT ARE UNCOVERED, REPLACE IN KIND5

29. IN AREAS WHERE SHEATHING IS REMOVED AND MOLD IS UNCOVERED, CONTRACTOR SHALL ENGAGE CERTIFIED ABATEMENT CONTRACTOR TO REMOVE MOLD.

FIRE PROTECTION NOTES

1. FIRE DEPARTMENT FINAL INSPECTION RECOMMENDED. SCHEDULE ALL INSPECTIONS 24 HOURS IN ADVANCE.

2. ALL EXIT DOORS SHALL BE OPENABLE FROM THE INSIDE WITHOUT THE USE OF A KEY OR ANY SPECIAL KNOWLEDGE OR EFFORT. NO DEAD BOLTS, NO SLIDING BOLTS, ETC.

3. FIRE ALARM SYSTEM SHALL BE OPERABLE AT ALL TIMES. MANUAL PULL STATIONS SHALL BE LOCATED AS REQUIRED. CBC SECTION 907.4.2

4. INTERIOR FINISHES SHALL COMPLY WITH THE REQUIREMENTS OF CH. 8, CBC 2016 EDITION.

5. ALL DECORATIVE MATERIALS SHALL BE MAINTAINED IN A FLAME-RETARDANT CONDITION. (C.C.R. T-19, SEC. 1.14, 3.08, 3.21, AND C.F.C. SEC. 1103.3.3).

6.THE CONSTRUCTION,REMODEL,OR DEMO. OF A BLDG. SHALL COMPLY WITH CFC ARTICLE 87.

7. FIRE HYDRANTS SHALL COMPLY WITH FIRE DEPARTMENT REQUIREMENTS FOR ON-SITE FIRE HYDRANTS.

8. WHEN SERVING MORE THAN 100 SPRINKLER HEADS, AUTOMATIC SPRINKLER SYSTEM SHALL BE SUPERVISED BY AN APPROVED CENTRAL, PROPRIETARY OR REMOTE, STATION SERVICE, OR SHALL BE PROVIDED WITH A LOCAL ALARM WHICH WILL GIVE AN AUDIBLE SIGNAL AT A CONSTANTLY ATTENDED LOCATION PER SECTION 903.4.

9. CONTRACTOR SHALL PROVIDE PROPER FIRE TRUCK ACCESS AND FIRE EXITS DURING CONSTRUCTION AT ALL TIMES.

10. PENETRATIONS OF FIRE RESISTIVE WALLS, FLOOR-CEILINGS AND ROOF CEILINGS SHALL BE PROTECTED AS REQUIRED IN CBC SECTIONS 714 AND 715.

11. AUDIBLE AND VISUAL ALARMS WILL COMPLY WITH THE PROVISIONS OF NFPA 72G.

12. WALL AND CEILING MATERIALS SHALL NOT EXCEED THE FLAME SPREAD CLASSIFICATIONS IN CBC TABLE 803-11.

13.FOAM PLASTICS SHALL NOT BE USED AS INTERIOR FINISH EXCEPT AS PROVIDED IN SEC. 2604.

14. MANUAL FIRE ALARM BOXES ARE NOT REQUIRED FOR GROUP-A OCCUPANCIES WHERE THE BUILDING SPRINKLER SYSTEM INSTALLED IN ACCORDANCE WITH SECTION 903.3.1.1 AND THE OCCUPANT NOTIFICATION APPLIANCES WILL ACTIVATE THROUGHOUT THE NOTIFICATION ZONES UPON SPRINKLER WATERFLOW. (CBC 907.2.1)

15. PER SECTION 1009.8, WHEN SPRINKLER OR FIRE ALARMS ARE PROVIDED, THEY SHALL COMPLY WITH THE CBC, CHAPTER 35.

16. APPROVED NOTIFICATION APPLIANCES FOR THE HEARING IMPAIRED SHALL BE INSTALLED IN ACCORDANCE WITH THE PROVISIONS OF NFPA 72G IN THE FOLLOWING AREAS: RESTROOMS, MULTIPURPOSE ROOMS, OCCUPIED ROOMS WHERE AMBIENT NOISE IMPAIRS HEARING OF THE FIRE ALARM, LOBBIES, MEETING ROOMS, AND ANY OTHER AREA FOR COMMON USE. SECTION 3501.1, AMENDMENT TO SECTION 6-4.5.

17. DURING CONSTRUCTION, AT LEAST ONE EXTINGUISHER SHALL BE PROVIDED ON EACH FLOOR LEVEL AT EACH STAIRWAY, IN ALL STORAGE AND CONSTRUCTION SHEDS, IN LOCATIONS WHERE FLAMMABLE OR COMBUSTIBLE LIQUIDS ARE STORED OR USED, AND WHERE OTHER SPECIAL HAZARDS ARE PRESENT PER CFC 1415.1

18. BUILDINGS UNDERGOING CONSTRUCTION, ALTERATION, OR DEMOLITION SHALL CONFORM TO CFC CHAPTER 14. WELDING, CUTTING, AND OTHER HOT WORK SHALL BE IN CONFORMANCE WITH CDC CHAPTER 26.

19. ADDRESS IDENTIFICATION SHALL BE PROVIDED FOR ALL NEW AND EXISTING BUILDINGS IN A LOCATION THAT IS PLAINLY VISIBLE AND LEGIBLE FROM THE STREET OR ROAD FRONTING THE PROPERTY. WHERE ACCESS IS BY WAY OF PRIVATE ROAD AND THE BUILDING ADDRESS CANNOT BE VIEWED FROM THE PUBLIC WAY, AN APPROVED SIGN OR MEANS SHALL BE USED TO IDENTIFY THE STRUCTURE.

20. WALL, FLOOR AND CEILING FINISHES AND MATERIALS SHALL NOT EXCEED THE INTERIOR FINISH CLASSIFICATIONS IN CBC TABLE 803.3AND SHALL MEET THE FLAME PROPAGATION PERFORMANCE CRITERIA OF THE CALIFORNIA CODE OF REGULATIONS, TITLE 19, DIVISION 1. DECORATIVE MATERIALS SHALL BE PROPERLY TREATED BY A PRODUCT OR PROCESS APPROVED BY THE STATE FIRE MARSHAL WITH APPROPRIATE DOCUMENTATION PROVIDED TO THE CITY OF SAN DIEGO.

21. DUMPSTERS AND TRASH CONTAINERS EXCEEDING 1.5 CUBIC YARDS SHALL NOT BE STORED IN BUILDINGS OR PLACED WITHIN 5 FEET OF COMBUSTIBLE WALLS, OPENINGS OR COMBUSTIBLE ROOF EAVE LINES UNLESS PROTECTED BY AN APPROVED SPRINKLER SYSTEM OR LOCATED IN A TYPE I OR IIA STRUCTURE SEPARATED BY 10 FEET FROM OTHER STRUCTURES. CONTAINERS LARGER THAN 1 CUBIC YARD SHALL BE OF NON- OR LIMITED COMBUSTIBLE MATERIALS OR SIMILARLY PROTECTED OR SEPARATED.CFC 304.3

22. EXITS, EXIT SIGNS, FIRE ALARM PANELS, HOSE CABINETS, FIRE EXTINGUISHER LOCATIONS, AND STANDPIPE CONNECTIONS SHALL NOT BE CONCEALED BY CURTAINS, MIRRORS OR OTHER DECORATIVE MATERIAL.

23. OPEN FLAMES, FIRE, AND BURNING ON PREMISES IS PROHIBITED EXCEPT AS SPECIFICALLY PERMITTED BY THE CITY OF SAN DIEGO AND CFC 308.

24. THE EGRESS PATH SHALL REMAIN FREE AND CLEAR OF ALL OBSTRUCTIONS AT ALL TIMES. NO STORAGE IS PERMITTED IN ANY EGRESS PATHS.

25. AN AUTOMATIC FIRE EXTINGUISHING SYSTEM SHALL BE PROVIDED TO PROTECT COMMERCIAL TYPE FOOD HEATING EQUIPMENT THAT PRODUCES GREASE-LADEN VAPORS AND SHALL COMPLY WITH 2016 CFC, CMC AND 2016 NFPA 17A. REVIEW AND APPROVAL OF A HOOD AND DUCT EXTINGUISHING SYSTEM PLAN IS REQUIRED BEFORE INSTALLATION OR USE OF COOKING EQUIPMENT.

CAL. GREEN BUILDING STAND.

1. IN ORDER TO COMPLY WITH ALL MANDATORY REQUIREMENTS OF THE CALIFORNIA GREEN BUILDING STANDARDS CODE, THE PROJECT MUST MEET ALL MANDATORY REQUIREMENTS OF THE CALIFORNIA GREEN BUILDING STANDARDS CODE.

2. 100% OF TREES, STUMPS, ROCKS AND ASSOCIATED VEGETATION AND SOILS RESULTING PRIMARILY FROM LAND CLEARING SHALL BE REUSED OR RECYCLED. A LETTER FROM THE CONTRACTOR WITH VERIFICATIONS NEEDS TO BE SUBMITTED TO THE INSPECTOR SHOWING COMPLIANCE.

3. PREVENT IRRIGATION SPRAY ON STRUCTURES.

4. ADHESIVES, SEALANTS, CAULKS. ADHESIVES AND SEALANTS USED ON THE PROJECT SHALL MEET THE REQUIREMENTS OF THE FOLLOWING STANDARDS. (SECTION 5..504.4.1 OF CAL GREEN) ADHESIVES, ADHESIVE BONDING PRIMERS, ADHESIVE PRIMERS, SEALANTS, SEALANT PRIMERS AND CAULKS SHALL COMPLY WITH LOCAL OR REGIONAL AIR POLLUTION CONTROL OR AIR QUALITY MANAGEMENT DISTRICT RULES WHERE APPLICABLE, OR SCAQMD RULE 1168 VOC LIMITS, AS SHOWN IN TABLES 5.504.4.1 AND 5.504.4.2 OF CAL GREEN.

5. A LETTER FROM THE CONTRACTOR OR BUILDING OWNER CERTIFYING WHAT MATERIAL HAS BEEN USED AND ITS COMPLIANCE WITH THE CODE MUST BE SUMBITTED TO THE BUILDING INSPECTOR.

6. AEROSOL ADHESIVES, AND SMALLER SIZE UNIT SIZES OF ADHESIVES, AND SEALANT OR CAULKING COMPOUNDS (IN UNITS OF PRODUCT, LESS PACKAGING, WHICH DO NOT WEIGH MORE THAN ONE POUND AND DO NOT CONSIST OF MORE THAN 16 FLUID OUNCES) SHALL COMPLY WITH STATEWIDE VOC STANDARDS AND OTHER REQURIEMENTS, INCLUDING PROHIBITIONS ON USE OF CERTAIN TOXIC COMPOUNDS, OF CALIFORNIA CODE OF REGULATIONS, TITLE 17, COMMENCING WITH SECTION 94507.

7. ARCHITECTURAL PAINTS AND COATINGS SHALL COMPLY WITH TABLE 5.504.4.2 UNLESS MORE STRINGENT LOCAL LIMITS APPLY.

8. AEROSOL PAINTS AND COATINGS SHALL MEET THE PRODUCT-WEIGHTED MIR LIMITS FOR ROC IN SECTION 94522(A)(3) AND OTHER REQUIREMENTS, INCLUDING PROHIBITIONS ON USE OF CERTAIN TOXIC COMPOUNDS AND OZONE DEPLETING SUBSTANCES (CCR, TITLE 17, COMMENCING WITH SECTION 94507.

9. PROVIDE A LETTER FROM THE CONTRACTOR AND OR THE BUILDING OWNER CERTIFYING WHAT PAINT HAS BEEN USED AND ITS COMPLIANCE WITH THE CODE MUST BE SUBMITTED TO THE BUILDING INSPECTOR.

10. ALL CARPET INSTALLED IN THE BUILDING INTERIOR SHALL MEET THE REQUIREMENTS OF THE CARPET AND RUG INSTITUTE GREEN LABEL PROGRAM. ALL CARPET ADHESIVE SHALL MEET THE REQUIREMENTS OF TABLE 804.4.1. A LETTER FROM THE INSTALLER CERTIFYING COMPLIANCE MUST BE SUBMITTED TO THE BUILDING INSPECTOR.

11. HARDWOOD PLYWOOD, PARTICLEBOARD, AND MEDIUM DENSITY FIBERBOARD COMPOSITE WOOD PRODUCTS USED ON THE INTERIOR OR EXTERIOR OF THE BUILDING SHALL MEET THE REQUIREMENTS FOR FORMALDEHYDE AS SPECIFIED IN TABLE 5.504.4

12. DOCUMENTATION SHALL BE PROVIDED VERIFYING THAT RESILIENT FLOORING MATERIALS MEET THE POLLUTANT EMISSION LIMITS.

13. SMOKING PROHIBITED WITHIN 25 FEET OF BUILDING ENTRIES, OUTDOOR AIR INTAKES AND OPERABLE WINDOWS WHERE OUTDOOR AREAS ARE PROVIDED FOR SMOKING, AND IN BUILDINGS.

MLK Recreation Center Moisture Intrusion

G-0.1

AS-BUILT INFORMATION

MATERIALS	MANUFACTURER
–	–
–	–
–	–
–	–

PLANS FOR THE CONSTRUCTION OF
MLK Recreation Center Moisture Intrusion

GENERAL NOTES

CONSULTANT

SPEC. NO. 1945

CITY OF SAN DIEGO, CALIFORNIA
ENGINEERING & CAPITAL PROJECTS DEPARTMENT
SHEET 2 OF 33 SHEETS

WBS B 19001

CONSTRUCTION CHANGE / ADDENDUM

CHANGE	DATE	AFFECTED OR ADDED SHEET NUMBERS	APPROVAL NO.

WARNING
0 1
IF THIS BAR DOES NOT MEASURE 1" THEN DRAWING IS NOT TO SCALE.

The City of SAN DIEGO Engineering & Capital Projects

ROESLING NAKAMURA TERADA ARCHITECTS

ROESLING NAKAMURA TERADA ARCHITECTS INC
363 Fifth Avenue
San Diego, California 92101
P619.233.1023
www.nrtarchitects.com

LICENSED ARCHITECT RALPH J. ROESLING NO. C 10987 REN. 2-28-23 STATE OF CALIFORNIA
07-29-2021

APPROVED:
FOR CITY ENGINEER — DATE
ELIZABETH SCHROTH-NICHOLS — C-80228
DEPUTY CITY ENGINEER — RCE#

DESCRIPTION	BY	APPROVED	DATE	FILMED
ORIGINAL	RNT			

CONTRACTOR — DATE STARTED
INSPECTOR — DATE COMPLETED

SUBMITTED BY:
DELFA GENOVA
PROJECT MANAGER
CHECKED BY:
REZA RASHIDIAN
PROJECT ENGINEER

194-1749
CCS27 COORDINATE

1834-6309
CCS83 COORDINATE

40821-2-D

NON-COMPLYING ELEMENTS BEING MADE ACCESSIBLE UNDER THIS PERMIT

WALKS AND SIDEWALKS

1. UPGRADE EXISTING CONCRETE WALKWAY IN FRONT OF BUILDING TO SERVE AS ACCESSIBLE ROUTE
2. AN ACCESSIBLE ROUTE SHALL BE PROVIDED TO THE COURTYARD, HANDBALL COURTS AND RESTROOMS.
3. RE-STRIPE ALL TREADS AT EXISTING STAIRWAY.
4. TOILET COMPARTMENT FOR BOTH MEN AND WOMEN RESTROOMS - RELOCATE ACCESSIBLE STALL DOOR IN LINE WITH STALL PARTITION WALL.
5. ACCESSIBLE WALL MOUNTED SIGN TO BE INSTALLED AT BOTH MEN AND WOMEN RESTROOMS.
6. DOOR STOPPER AT BOTH MEN AND WOMEN RESTROOM DOORS.
7. TOILET HEIGHTS IN ACCESSIBLE STALL FOR BOTH MEN AND WOMEN TO BE ADJUSTED TO MAXIMUM 19" MEASURED FROM FINISH FLOOR TO TOP OF SEAT.
8. REPLACE EXITING LAVATORY VANITY TOPS IN BOTH MEN AND WOMAN WITH HEIGHT REQUIREMENTS OF 34" TO TOP OF LEADING EDGE AND 29" KNEE CLEARANCE.
9. REMOVE AND REPLACE EXISTING HAND DRYERS IN BOTH MEN AND WOMEN RESTROOMS.
10. INSTALL GRAB BARS AT EACH SIDE OF URINAL.
11. INSTALL PROTECTIVE RAILINGS ON BOTH SIDES OF EXISTING DRINKING FOUNTAINS.
12. INSTALL ADDITIONAL DIRECTIONAL SIGNS TO ENTRANCE OF RECREATION CENTER.
13. RE-STRIPE EXISTING ACCESSIBLE PARKING SPACES.

ACCESSIBILITY NOTES

WALKS AND SIDEWALKS

1. CONTINUOUS SURFACE: WALKS AND SIDEWALKS SUBJECT TO THESE REGULATIONS SHALL HAVE A CONTINUOUS COMMON SURFACE, NOT INTERRUPTED BY STEPS OR BY ABRUPT CHANGES IN LEVEL EXCEEDING 1/2 INCH AND SHALL BE A MINIMUM OF 48 INCHES IN WIDTH. 1/2" CHANGE IN ELEVATION SHALL BE BEVELED 1:2 WITH 1/4" MAXIMUM VERTICAL. SURFACES SHALL BE SLIP-RESISTANT AS FOLLOWS: (SECTIONS 11B-302 AND 11B-303)

1.1 SLOPES LESS THAN 6 PERCENT: SURFACES WITH A SLOPE OF LESS THAN 6 PERCENT GRADIENT SHALL BE AT LEAST AS SLIP-RESISTANT AS DESCRIBED FOR A MEDIUM SALTED (MEDIUM BROOM) FINISH.

1.2 NOT USED.

1.3 SURFACE CROSS-SLOPES: SURFACE CROSS-SLOPES SHALL NOT EXCEED 1.5% (CITY OF SAN DIEGO).

2. GRATINGS: WALKS, SIDEWALKS AND PEDESTRIAN WAYS SHALL BE FREE OF GRATINGS WHENEVER POSSIBLE. FOR GRATINGS LOCATED IN THE SURFACE OF ANY OF THESE AREAS, GRID OPENINGS IN GRATINGS SHALL BE LIMITED TO 1/2 INCH (13 MM) IN THE DIRECTION OF TRAFFIC FLOW. (SECTION 11B-302.3)

3. CHANGES IN LEVEL: ABRUPT CHANGES IN LEVEL ALONG ANY ACCESSIBLE ROUTE SHALL NOT EXCEED 1/2 INCH. WHEN CHANGES IN LEVEL DO OCCUR, THEY SHALL BE BEVELED WITH A SLOPE NO GREATER THAN 1 UNIT VERTICAL IN 2 UNITS HORIZONTAL, EXCEPT THAT LEVEL CHANGES NOT EXCEEDING 1/4 INCH MAY BE VERTICAL. WHEN CHANGES IN LEVELS GREATER THAN 1/2 INCH ARE NECESSARY THEY SHALL COMPLY WITH THE REQUIREMENTS FOR CURB RAMPS. (SECTION 11B-406)

4. WARNING CURBS: ABRUPT CHANGES IN LEVEL, EXCEPT BETWEEN A WALK OR SIDEWALK AND AN ADJACENT STREET OR DRIVEWAY, EXCEEDING 4 INCHES IN A VERTICAL DIMENSION, SUCH AS AT PLANTERS OR FOUNDATIONS LOCATED IN OR ADJACENT TO WALKS, SIDEWALKS OR OTHER PEDESTRIAN WAYS, SHALL BE IDENTIFIED BY CURBS PROJECTING AT LEAST 6 INCHES IN HEIGHT ABOVE THE WALK OR SIDEWALK SURFACE TO WARN THE BLIND OF A POTENTIAL DROP OFF. WHEN A GUARDRAIL OR HANDRAIL IS PROVIDED, NO CURB IS REQUIRED WHEN A GUIDE RAIL IS PROVIDED CENTERED 3 INCHES PLUS OR MINUS 1 INCH ABOVE THE SURFACE OF THE WALK OR SIDEWALK, THE WALK IS 5 PERCENT OR LESS GRADIENT OR NO ADJACENT HAZARD EXISTS. (SECTION 11B-303.5)

5. PROVIDE A 60" X 60" LEVEL AREA WHERE A DOOR (OR GATE) SWINGS TOWARD THE WALK IN THE ACCESSIBLE ROUTE OF TRAVEL. EXTEND WALK A MINIMUM 24" BEYOND THE STRIKE EDGE OF ANY DOOR (OR GATE) THAT SWINGS TOWARDS THE WALK.

6. WALKS WITH CONTINUOUS GRADIENTS SHALL BE PROVIDED WITH LEVEL AREAS A MINIMUM 5'-0" LONG AT INTERVALS OF 400'-0" MAXIMUM PER SECTION 11B-403.7.

PEDESTRIAN RAMPS

1. THE ALLOWABLE CROSS SLOPE AT PEDESTRIAN RAMPS SHALL BE 1/4 INCH PER FOOT (2%) MAXIMUM, PER SECTION 11B-405.3. PROVIDE 1.5% MAXIMUM (CITY OF SAN DIEGO)

2. RAMP SURFACES SHALL BE SLIP-RESISTANT.

3. RAMPS SHALL HAVE A MINIMUM WIDTH OF 48 INCHES, PER SECTION 11B-405.5. WHERE A RAMP SERVES A BUILDING HAVING AN OCCUPANT LOAD OF 300 OR MORE, THE MINIMUM CLEAR WIDTH SHALL BE 60 INCHES.

4. REQUIRED LANDINGS AT THE TOP AND BOTTOM OF RAMPS, PER SECTION 11B-405.7:
A. THE BOTTOM LANDING SHALL BE GREATER OR EQUAL TO 72" IN THE DIRECTION OF TRAVEL.
B. THE TOP LANDING SHALL BE A MINIMUM OF 60" X 60".
C. WHERE THE CHANGE IN ELEVATION IS GREATER THAN 30", PROVIDE INTERMEDIATE LANDING PER SECTION 11B-405.7. WHERE THERE IS A CHANGE OF DIRECTION IN EXCESS OF 30 DEGREES, PROVIDE A LANDING OF 72" MINIMUM IN THE DIRECTION OF RAMP RUN. PROVIDE A LANDING OF 60" IN THE DIRECTION OF RAMP RUN IN OTHER INTERMEDIATE LANDINGS

KITCHEN AND COMMON USE SINKS

1. EACH ACCESSIBLE SINK SHALL BE A MAXIMUM OF 6 1/2 INCHES DEEP. SINKS SHALL BE MOUNTED WITH THE COUNTER OR RIM NO HIGHER THAN 34" ABOVE THE FINISH FLOOR. KNEE CLEARANCES THAT IS AT LEAST 27 INCHES HIGH, 30 INCHES WIDE AND 19 INCHES DEEP SHALL BE PROVIDED UNDERNEATH SINKS.

2. HOT WATER AND DRAIN PIPES EXPOSED UNDER SINKS SHALL BE INSULATED OR OTHERWISE CONFIGURED SO AS TO PROTECT AGAINST CONTACT. THERE SHALL BE NO SHARP OR ABRASIVE SURFACES UNDER SINKS.

3. FAUCET CONTROLS AND OPERATING MECHANISIMS SHALL BE OPERABLE WITH ONE HAND AND SHALL NOT REQUIRE TIGHT GRASPING, PINCHING OR TWISTING OF THE WRIST. THE FORCE REQUIRED TO ACTIVATE CONTROLS SHALL NOT BE GREATER THAN 5 LBF. LEVER-OPERATED, PUSH-TYPE AND ELECTRONICALLY CONTROLLED MECHANISMS ARE EXAMPLES OF ACCEPTABLE DESIGNS. SELF CLOSING VALVES ARE ALLOWED IF THE FAUCET REMAINS OPEN FOR AT LEAST 10 SECONDS

DOOR NOTES

1. THE FORCE REQUIRED TO ACTIVATE OPERABLE PARTS OF ALL INTERIOR HINGED DOORS AND GATES, SLIDING OR FOLDING DOORS, AND EXTERIOR HINGED DOORS SHALL BE FIVE (5) POUNDS MAXIMUM. THE FORCE REQUIRED TO ACTIVATE OPERABLE PARTS OF REQUIRED FIRE DOOR SHALL NOT EXCEED 15 POUNDS. (CBC SECTION 11B-404.2.9)

2. HARDWARE ON DOORS AND GATES (HANDLES, PULLS, LATCHES, LOCKS AND OTHER OPERABLE PARTS) TO BE OPERABLE WITH ONE HAND WITHOUT REQUIRING TIGHT GRASPING, PINCHING, OR TWISTING OF THE WRIST. (CBC SECTION 11B-404.2.7, 11B-309.4)

BABY CHANGING STATION NOTES

1. OPERABLE PARTS SHALL BE OPERABLE WITH ONE HAND AND SHALL NOT REQUIRE TIGHT GRASPING, PINCHING, OR TWISTING OF THE WRIST. THE FORCE REQUIRED TO ACTIVATE OPERABLE PARTS SHALL BE 5 POUNDS (22.2 N) MAXIMUM. (CBC 11B-309.4)

MLK Recreation Center Moisture Intrusion

G-0.2

AS-BUILT INFORMATION

MATERIALS	MANUFACTURER
–	–
–	–
–	–
–	–

PLANS FOR THE CONSTRUCTION OF
MLK Recreation Center Moisture Intrusion

ACCESSIBILITY NOTES

CONSULTANT

SPEC. NO. 1945

CITY OF SAN DIEGO, CALIFORNIA
ENGINEERING & CAPITAL PROJECTS DEPARTMENT
SHEET 3 OF 33 SHEETS

WBS B 19001

CONSTRUCTION CHANGE / ADDENDUM

CHANGE	DATE	AFFECTED OR ADDED SHEET NUMBERS	APPROVAL NO.

WARNING
0 1
IF THIS BAR DOES NOT MEASURE 1" THEN DRAWING IS NOT TO SCALE.

The City of SAN DIEGO Engineering & Capital Projects

ROESLING NAKAMURA TERADA ARCHITECTS

ROESLING NAKAMURA TERADA ARCHITECTS INC
363 Fifth Avenue
San Diego, California 92101
P619.233.1023
www.mtarchitects.com

LICENSED ARCHITECT RALPH J. ROESLING NO. C 10247 REN. 2-29-23 STATE OF CALIFORNIA
07-29-2021

APPROVED:
FOR CITY ENGINEER
ELIZABETH SCHROTH-NICHOLS
DEPUTY CITY ENGINEER
DATE
C-80228
RCE#

DESCRIPTION	BY	APPROVED	DATE	FILMED
ORIGINAL	RNT			

CONTRACTOR
INSPECTOR
DATE STARTED
DATE COMPLETED

SUBMITTED BY: DELFA GENOVA, PROJECT MANAGER
CHECKED BY: REZA RASHIDIAN, PROJECT ENGINEER
194-1749 CCS27 COORDINATE
1834-6309 CCS83 COORDINATE
40821-3-D

MLK JR. RECREATION CENTER MOISTURE INTRUSION

ADDITIONAL NOTES TO CONTRACTOR

1. PROPERTY LINE TO BE MARKED-OUT BEFORE DEMOLITION TO AVOID ENCROACHING OR DAMAGE TO ADJACENT PROPERTY.
2. ANY EXISTING LANDSCAPE AND IRRIGATION DAMAGE WITHIN LIMIT OF WORK, WILL BE THE CONTRACTOR'S RESPONSIBILITY TO IMMEDIATELY REPAIR THE DAMAGE TO THE SATISFACTION OF THE CITY ENGINEER.
3. UTILITY BOXES IMPACTED BY THE DEMOLITION SHALL BE REPLACED WITH NEW BOXES.
4. EXISTING TREES OR LANDSCAPING TO REMAIN MUST BE PROTECTED AND MAINTAINED DURING CONSTRUCTION (HAND WATERING LANDSCAPING IF NECESSARY).
5. PROTECT IN PLACE EXISTING IMPROVEMENTS NOT TO BE DEMOLISHED. IF IT HAPPENS TO GET DAMAGED, IT SHALL BE REPLACED IN KIND OR BETTER PER SATISFACTION OF THE ENGINEER.

GROUND WATER DISCHARGE NOTES

1. ALL GROUND WATER EXTRACTION AND SIMILAR WASTE DISCHARGES TO SURFACE WATERS NOT TRIBUTARY TO THE SAN DIEGO BAY ARE PROHIBITED UNTIL IT CAN BE DEMONSTRATED THAT THE OWNER HAS APPLIED AND OBTAINED AUTHORIZATION FROM THE STATE OF CALIFORNIA VIA AN OFFICIAL "ENROLLMENT LETTER" FROM THE REGIONAL WATER QUALITY CONTROL BOARD IN ACCORDANCE WITH THE TERMS, PROVISIONS AND CONDITIONS OF STATE ORDER NO R9-2015-0013 NPDES CAG919003.

2. THE ESTIMATED MAXIMUM DISCHARGE RATES MUST NOT EXCEED THE LIMITS SET IN THE OFFICIAL "ENROLLMENT LETTER" FROM THE REGIONAL BOARD UNLESS PRIOR NOTIFICATION AND SUBSEQUENT AUTHORIZATION HAS BEEN OBTAINED, AND DISCHARGE OPERATIONS MODIFIED TO ACCOMMODATE THE INCREASED RATES.

3. ALL GROUND WATER EXTRACTIONS AND SIMILAR WASTE DISCHARGES TO SURFACE WATERS TRIBUTARY TO THE SAN DIEGO BAY ARE PROHIBITED UNTIL IT CAN BE DEMONSTRATED THAT THE OWNER HAS APPLIED AND OBTAINED AUTHORIZATION FROM THE STATE OF CALIFORNIA VIA AN OFFICIAL "ENROLLMENT LETTER" FROM THE REGIONAL WATER QUALITY CONTROL BOARD IN ACCORDANCE WITH THE TERMS, PROVISIONS AND CONDITIONS OF STATE ORDER NO R9-2015-0013 NPDES NO. CAG919003.

CURB RAMP NOTE

THE REQUIRED DETECTABLE WARNING (TRUNCATED DOMES) ON CURB RAMPS ARE TO COMPLY WITH THE CITY STANDARDS (SDG-130) AND SPECIFICATIONS. A 12" X 12" (MIN.) SAMPLE OF THE DETECTABLE WARNING, THE PRODUCTS' TEST REPORT AND A COPY OF THE MANUFACTURER'S INSTALLATION INSTRUCTION MUST BE SUBMITTED TO THE DESIGNATED CITY RESIDENT ENGINEER FOR REVIEW PRIOR TO INSTALLATION. FAILURE TO COMPLY WITH THE STANDARDS, SPECIFICATIONS AND SAMPLE SUMBMITTAL REVIEW PROCESS WILL RESULT IN THE REMOVAL OR REPLACEMENT OF THE DETECTABLE WARNING AND/OR CURB RAMP(S) AT CONTRACTOR AND/OR OWNER'S EXPENSE.

DECLARATION OF RESPONSIBLE CHARGE

I HEREBY DECLARE THAT I AM THE ENGINEER OF WORK FOR THIS PROJECT, THAT I HAVE EXERCISED RESPONSIBLE CHARGE OVER THE DESIGN OF THE PROJECT AS DEFINED IN SECTION 6703 OF THE BUSINESS AND PROFESSIONS CODE, AND THAT THE DESIGN IS CONSISTENT WITH CURRENT STANDARDS.

I UNDERSTAND THAT THE CHECK OF PROJECT DRAWINGS AND SPECIFICATIONS BY THE CITY OF SAN DIEGO IS CONFINED TO A REVIEW ONLY AND DOES NOT RELIEVE ME, AS ENGINEER OF WORK, OF MY RESPONSIBILITIES FOR PROJECT DESIGN.

THOMAS A. JONES R.C.E. NO. 34867 EXP. 09-30-21 — DATE: 07-29-2021

BDS ENGINEERING, INC.
5575 LAKE PARK WAY, SUITE 114
LA MESA, CA 91942
TELEPHONE: 619-582-4992
FAX: 619-582-7428
EMAIL: bdsce@bdsengineering.com

TOPOGRAPHY SOURCE

TOPO SOURCE: BDS ENGINEERING, INC.
5575 LAKE PARK WAY, STE. 114
LA MESA, CA 91942
TOPO SOURCE METHOD: FIELD SURVEY
TOPO SOURCE DATE: 07-27-2018

GRADING QUANTITIES

GRADED AREA	0.11 ACRES	MAX. CUT DEPTH 0.0 FT
CUT QUANTITIES	0.0 CYD	MAX CUT SLOPE RATIO (2:1MAX)
FILL QUANTITIES	0.0 CYD	MAX. FILL DEPTH 0.0 FT
IMPORT/EXPORT	0.0 CYD	MAX FILL SLOPE RATIO (2:1MAX)

THIS PROJECT PROPOSES TO EXPORT 0.0 CUBIC YARDS OF MATERIAL FROM THIS SITE. ALL EXPORT MATERIAL SHALL BE DISCHARGED TO A LEGAL DISPOSAL SITE. THE APPROVAL OF THIS PROJECT DOES NOT ALLOW PROCESSING AND SALE OF THE MATERIAL. ALL SUCH ACTIVITIES REQUIRE A SEPARATE CONDITIONAL USE PERMIT.

BENCHMARK

ELEVATIONS SHOWN HEREON ARE IN TERMS OF THE NORTH GEODETIC VERTICAL DATUM OF 1929 (NGVD29) BASED LOCALLY UPON THE FOLLOWING CITY OF SAN DIEGO BENCHMARK.

CITY OF SAN DIEGO STANDARD BRASS PLUG
SW CORNER LAS FLORES TERRACE & CHURCHWARD STREET
EL=261.761 DATUM = M.S.L. PER CITY OF SAN DIEGO BENCH MARK BOOK.

SURVEY CONTROL / BASIS OF BEARINGS

HORIZONTAL AND VERTICAL CONTROL FOR THIS PROJECT ARE AS FOLLOWS:

CP #1001 SCRIBED X N-1835854.03 E-6312200.54
CP #1002 SCRIBED X N-1835607.42 E-6312195.84

"THE BASIS OF COORDINATES FOR THIS SURVEY IS THE NORTH AMERICAN DATUM OF 1983 (NAD83) CALIFORNIA STATE PLANE COORDINATE SYSTEM OF 1983 (CCS83) ZONE 6 (EPOCH 1991.35) BASED LOCALLY UPON THE FOLLOWING CONTROL POINTS PER RECORD OF SURVEY MAP NO. 14492."

STATION	NORTHING	EASTING
178	1836907.58	6308455.06
249	1839929.12	6315805.81

GRID BEARING BETWEEN 178 AND 249 = N 67°39'17" E.

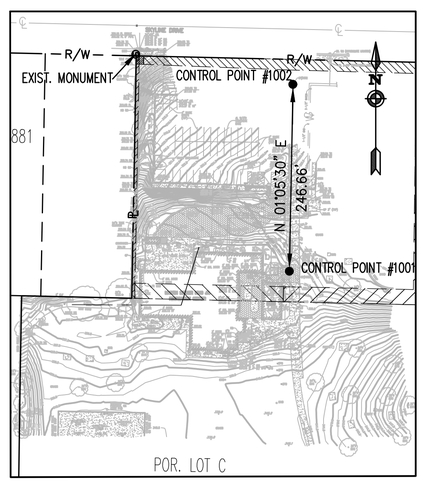

CONTROL MAP
NOT TO SCALE

APPLICABLE STANDARDS

THE PUBLIC IMPROVEMENTS SHOWN ON THESE PLANS SHALL BE CONSTRUCTED ACCORDING TO THE FOLLOWING STANDARD SPECIFICATIONS AND STANDARD DRAWINGS OF THE CITY OF SAN DIEGO.

STANDARD SPECIFICATIONS:

DOCUMENT NO.	DESCRIPTION
PWPI010119-01	STANDARD SPECIFICATIONS FOR PUBLIC WORKS CONSTRUCTION ("THE GREENBOOK"), 2021 EDITION
PWPI010119-02	CITY OF SAN DIEGO STANDARD SPECIFICATIONS FOR PUBLIC WORKS CONSTRUCTION ("THE WHITEBOOK"), 2021 EDITION
PWPI010119-04	CITY OF SAN DIEGO COMPUTER AIDED DESIGN AND DRAFTING (CADD) STANDARDS, 2021 EDITION

STANDARD DRAWINGS:

DOCUMENT NO.	DESCRIPTION
PWPI010119-03	CITY OF SAN DIEGO STANDARD DRAWINGS, 2021 EDITION

LEGEND

PROPOSED IMPROVEMENTS

IMPROVEMENT	STANDARD DWGS.	SYMBOL
4" P.C.C. SIDEWALK	SDG-109, SDG-155, SDG-156, G-10	
5" P.C.C. CONCRETE	3 / C-12	
SCHEDULE 'J' PAVEMENT	SDG-113	
CURB AND GUTTER TYPE 'G' AND MODIFIED TYPE 'H' (W=42")	SDG-151, SDG 156	
PAVER REPAIR	1 / C-12	
CONCRETE BROW DITCH TYPE 'B'	SDD-106	
STORM DRAIN	SDD-110	SD
CLEANOUT FOR UNDERDRAIN	SDSW-101	SD CO
12"x12" CATCH BASIN	6 / C-12	
24"x24" CATCH BASIN	5 / C-12	
18"x18" CATCH BASIN	4 / C-12	
CURB OUTLET TYPE A	D-25A	SD
FENCE AND GATE	SDM-112, SDM-114, M-20	X X
MASONRY RETAINING WALL TYPE 4	C-04	
GRAVITY RETAINING WALL TYPE 'A'	C-09	
CATCH BASIN TYPE "G"	SDRSD, D-08	

MLK Recreation Center Moisture Intrusion

C-1

AS-BUILT INFORMATION	
MATERIALS	MANUFACTURER
–	–
–	–
–	–
–	–

PLANS FOR THE CONSTRUCTION OF
MLK Recreation Center Moisture Intrusion

GENERAL NOTES

CONSULTANT

SPEC. NO. 1945

CITY OF SAN DIEGO, CALIFORNIA
ENGINEERING & CAPITAL PROJECTS DEPARTMENT
SHEET 4 OF 33 SHEETS

WBS B 19001

ENGINEER OF WORK:
BDS Engineering, Inc.
Civil Engineering
Land Surveying
5575 Lake Park Way, Suite 114
La Mesa, California 91942
(619) 582-4992 FAX (619) 582-7428

THOMAS A. JONES R.C.E. 34867 — DATE: 07-29-2021 — JOB NO. 18-22

REGISTERED PROFESSIONAL ENGINEER THOMAS A. JONES 34867 EXP. 9-30-23 CIV IL STATE OF CALIFORNIA 07-29-2021

APPROVED:
FOR CITY ENGINEER — DATE
ELIZABETH SCHROTH-NICHOLS — C-80228
DEPUTY CITY ENGINEER — RCE#

DESCRIPTION	BY	APPROVED	DATE	FILMED
ORIGINAL	BDS			

CONTRACTOR — DATE STARTED
INSPECTOR — DATE COMPLETED

SUBMITTED BY: DELFA GENOVA, PROJECT MANAGER
CHECKED BY: REZA RASHIDIAN, PROJECT ENGINEER
194-1749 CCS27 COORDINATE
1834-6309 CCS83 COORDINATE
40821- 4 -D

CONSTRUCTION CHANGE / ADDENDUM

CHANGE	DATE	AFFECTED OR ADDED SHEET NUMBERS	APPROVAL NO.

WARNING
0 1
IF THIS BAR DOES NOT MEASURE 1" THEN DRAWING IS NOT TO SCALE.

The City of SAN DIEGO — Engineering & Capital Projects

NOTE:

1. UNDERGROUND UTILITIES AS SHOWN ARE FROM AVAILABLE DRAWINGS SUPPLEMENTED BY OBSERVED ALIGNMENTS WITH SURFACE MANHOLES, VALVES, ETC. CONTRACTOR TO VERIFY EXACT LOCATION, DEPTH AND SIZE OF UNDERGROUND UTILITIES PRIOR TO CONSTRUCTION. SURFACE ITEMS SHOWN ARE FROM FIELD TOPOGRAPHY, COMPLETED BY AGUIRRE & ASSOCIATES IN MARCH 2017, AND SUPPLEMENTED BY BDS ENGINEERING, INC. IN JUNE 2018. ANY OBSERVED VARIATIONS FROM PLANS OR UTILITIES THAT ARE FOUND WHICH ARE NOT SHOWN ON PLANS SHOULD BE BROUGHT TO THE IMMEDIATE ATTENTION OF THE PROJECT MANAGER AND ENGINEER OF WORK.

2. CONTRACTOR SHALL BE RESPONSIBLE FOR ANY MONUMENTATION AND/ OR BENCHMARKS WHICH WILL BE DISTURBED OR DESTROYED BY CONSTRUCTION. SUCH POINTS SHALL BE REFERENCED AND REPLACED WITH APPROPRIATE MONUMENTATION BY A LICENSED LAND SURVEYOR OR A REGISTERED CIVIL ENGINEER AUTHORIZED TO PRACTICE LAND SURVEYING. A CORNER RECORD OR RECORD OF SURVEY, AS APPROPRIATE, SHALL BE FILED BY A LICENSED LAND SURVEYOR OR REGISTERED CIVIL ENGINEER AS REQUIRED BY THE LAND SURVEYOR'S ACT.

3. A PORTION OF THE NORTHWESTERLY BOUNDARY IS DELINEATED ON RECORD OF SURVEY MAP NO. 23327.

4. EASEMENTS SHOWN ARE PER TITLE REPORT ISSUED BY LAND TITLE INSURANCE COMPANY, ISSUED MAY 8, 1968, AS POLICY NO. 243235–R, AND WAS PROVIDED BY THE CITY OF SAN DIEGO ON JULY 10, 2018. ADDITIONAL EASEMENTS MAY OR MAY NOT EXIST.

ABBREVIATIONS:

AC	ASPHALT CONCRETE
A/C	AIR CONDITIONER
AL	AREA LIGHT
BBQ	BARBEQUE
BLDG	BUILDING
BW	BOTTOM OF WALL
CB	CATCH BASIN
CLF	CHAIN LINK FENCE
COL	COLUMN
CONC	CONCRETE
CP	CONTROL POINT
DBL	DOUBLE
EPB	ELECTRIC PULL BOX
EUC	EUCALYPTUS
FF	FINISH FLOOR
FH	FIRE HYDRANT
FL	FLOWLINE
FP	FLAG POLE
FS	FINISH SURFACE
GB	GRADE BREAK
GL	GATE LATCH
GP	GATE POST / GUARD POST
GS	GAS SERVICE
GT	GUTTER
HB	HOSE BIBB
HDPE	HIGH DENSITY POLYETHYLENE
ICVB	IRRIGATION CONTROL VALVE BOX
IE	INVERT ELEVATION
MS	MOW STRIP
N	NORTH
PED	PEDESTAL
QC	QUICK CONNECT
RD	ROOF DRAIN
REF	REFERENCE
S	SOUTH
SCO	SEWER CLEANOUT
SDCO	STORM DRAIN CLEANOUT
SLPB	STREET LIGHT PULL BOX
STMP	STUMP
TC	TOP OF CURB
TELE	TELEPHONE
TG	TOP OF GRATE
TRANS	TRANSFORMER
TVT	TELEPHONE VAULT
TW	TOP OF WALL
TYP	TYPICAL
VLT	VAULT
WS	WATER SERVICE
ø	DIAMETER
#	NUMBER

LEGEND

ALL EXISTING ITEMS ARE SCREENED

EXISTING BUILDING	
EXISTING CONCRETE PAVEMENT	
EXISTING PAVERS	
EXISTING TRUNCATED DOMES	
EXISTING RETAINING WALL	
EXISTING CHAIN LINK FENCE (TYPE AS NOTED)	
EXISTING CURB AND GUTTER	
EXISTING EDGE OF PAVEMENT	
EXISTING ASPHALT BERM	
EXISTING SPOT ELEVATION	345.9 339.8
EXISTING 0.5' CONTOUR	339.5
EXISTING AREA LIGHT	AL
EXISTING STREET LIGHT PULLBOX	SLPB
EXISTING WATER VALVE	GVW
EXISTING ELECTRICAL PULLBOX	EPB
EXISTING IRRIGATION CONTROL VALVE	ICVB
EXISTING STORM DRAIN CLEANOUT	SDCO
EXISTING SEWER CLEANOUT	SCO
EXISTING LEAD AND DISK	LD
EXISTING TREE (SIZE AND TYPE AS NOTED)	
TRANSFORMER	TRANS
EXISTING STORM DRAIN	SD
EXISTING REF FIRE SERVICE LINE	FS
EXISTING REF GAS LINE	G
EXISTING REF STORM DRAIN LINE	SD
EXISTING REF SEWER LINE	S
EXISTING REF WATER LINE	W
EXISTING RIGHT OF WAY	R/W
EXISTING PROPERTY LINE	PL
EXISTING EASEMENT	

MLK Recreation Center Moisture Intrusion

C-2

AS–BUILT INFORMATION

MATERIALS	MANUFACTURER
–	–
–	–
–	–
–	–

PLANS FOR THE CONSTRUCTION OF
MLK Recreation Center Moisture Intrusion

NOTES

CONSULTANT

SPEC. NO. 1945

CITY OF SAN DIEGO, CALIFORNIA
ENGINEERING & CAPITAL PROJECTS DEPARTMENT
SHEET 5 OF 33 SHEETS

WBS B 19001

CONSTRUCTION CHANGE / ADDENDUM

CHANGE	DATE	AFFECTED OR ADDED SHEET NUMBERS	APPROVAL NO.

WARNING
0 1
IF THIS BAR DOES NOT MEASURE 1" THEN DRAWING IS NOT TO SCALE.

The City of SAN DIEGO Engineering & Capital Projects

ENGINEER OF WORK:
BDS Engineering, Inc.
Civil Engineering
Land Surveying
5575 Lake Park Way, Suite 114
La Mesa, California 91942
(619) 582-4992 FAX (619) 582-7428

THOMAS A. JONES R.C.E. 34867 — DATE 07-29-2021 — JOB NO. 18-22

REGISTERED PROFESSIONAL ENGINEER THOMAS A. JONES 34867 EXP. 9-30-23 CIV IL STATE OF CALIFORNIA
07-29-2021

APPROVED:
FOR CITY ENGINEER
ELIZABETH SCHROTH–NICHOLS
DEPUTY CITY ENGINEER
DATE
C–80228
RCE#

DESCRIPTION	BY	APPROVED	DATE	FILMED
ORIGINAL	BDS			

SUBMITTED BY: DELFA GENOVA, PROJECT MANAGER
CHECKED BY: REZA RASHIDIAN, PROJECT ENGINEER

194–1749 CCS27 COORDINATE
1834–6309 CCS83 COORDINATE

CONTRACTOR
INSPECTOR
DATE STARTED
DATE COMPLETED

40821– 5 –D

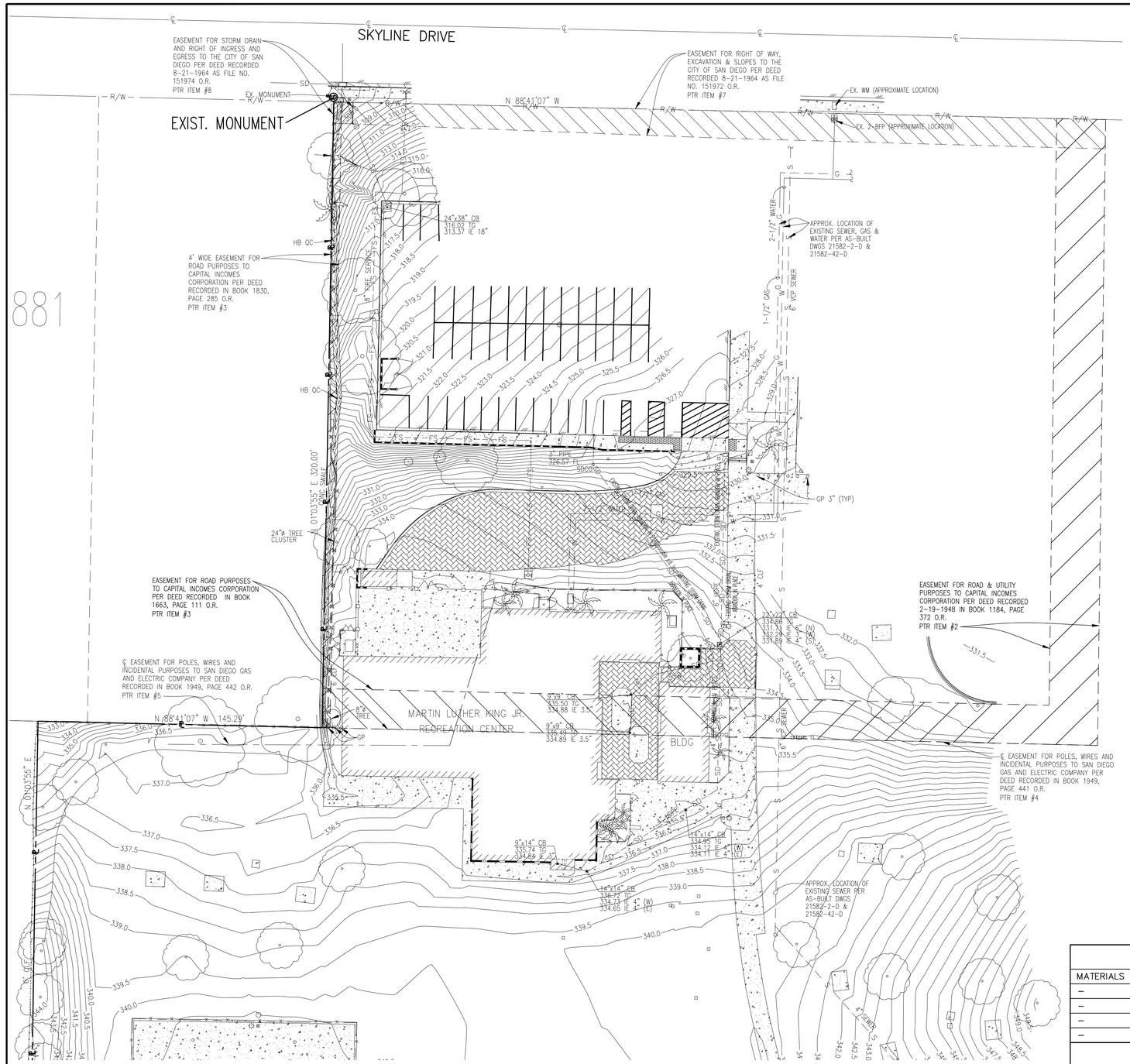

N

SCALE 1"=30'

GRAPHIC SCALE

IF SHEET IS LESS THAN 22" BY 34" IT IS A REDUCED PRINT-SCALE REDUCE ACCORDINGLY

0 15' 30' 60' 90'

SCALE: 1" = 30'

C-3

MLK Recreation Center Moisture Intrusion

AS-BUILT INFORMATION	
MATERIALS	MANUFACTURER
–	–
–	–
–	–
–	–

PLANS FOR THE CONSTRUCTION OF MLK Recreation Center Moisture Intrusion

EXISTING TOPOGRAPHY PLAN

CONSULTANT

SPEC. NO. 1945

CITY OF SAN DIEGO, CALIFORNIA
ENGINEERING & CAPITAL PROJECTS DEPARTMENT
SHEET 6 OF 33 SHEETS

WBS B 19001

CONSTRUCTION CHANGE / ADDENDUM			
CHANGE	DATE	AFFECTED OR ADDED SHEET NUMBERS	APPROVAL NO.

WARNING

0 1

IF THIS BAR DOES NOT MEASURE 1" THEN DRAWING IS NOT TO SCALE.

The City of SAN DIEGO Engineering & Capital Projects

ENGINEER OF WORK:

BDS Engineering, Inc. Civil Engineering Land Surveying
5575 Lake Park Way, Suite 114
La Mesa, California 91942
(619) 582-4992 FAX (619) 582-7428

THOMAS A. JONES R.C.E. 34867 — DATE 07-29-2021 — JOB NO. 18-22

REGISTERED PROFESSIONAL ENGINEER THOMAS A. JONES 34867 EXP. 9-30-23 CIVIL STATE OF CALIFORNIA 07-29-2021

APPROVED:
FOR CITY ENGINEER — DATE
ELIZABETH SCHROTH-NICHOLS — C-80228
DEPUTY CITY ENGINEER — RCE#

DESCRIPTION	BY	APPROVED	DATE	FILMED
ORIGINAL	BDS			

CONTRACTOR — DATE STARTED
INSPECTOR — DATE COMPLETED

SUBMITTED BY: DELFA GENOVA, PROJECT MANAGER
CHECKED BY: REZA RASHIDIAN, PROJECT ENGINEER

194-1749 CCS27 COORDINATE
1834-6309 CCS83 COORDINATE

40821- 6 -D

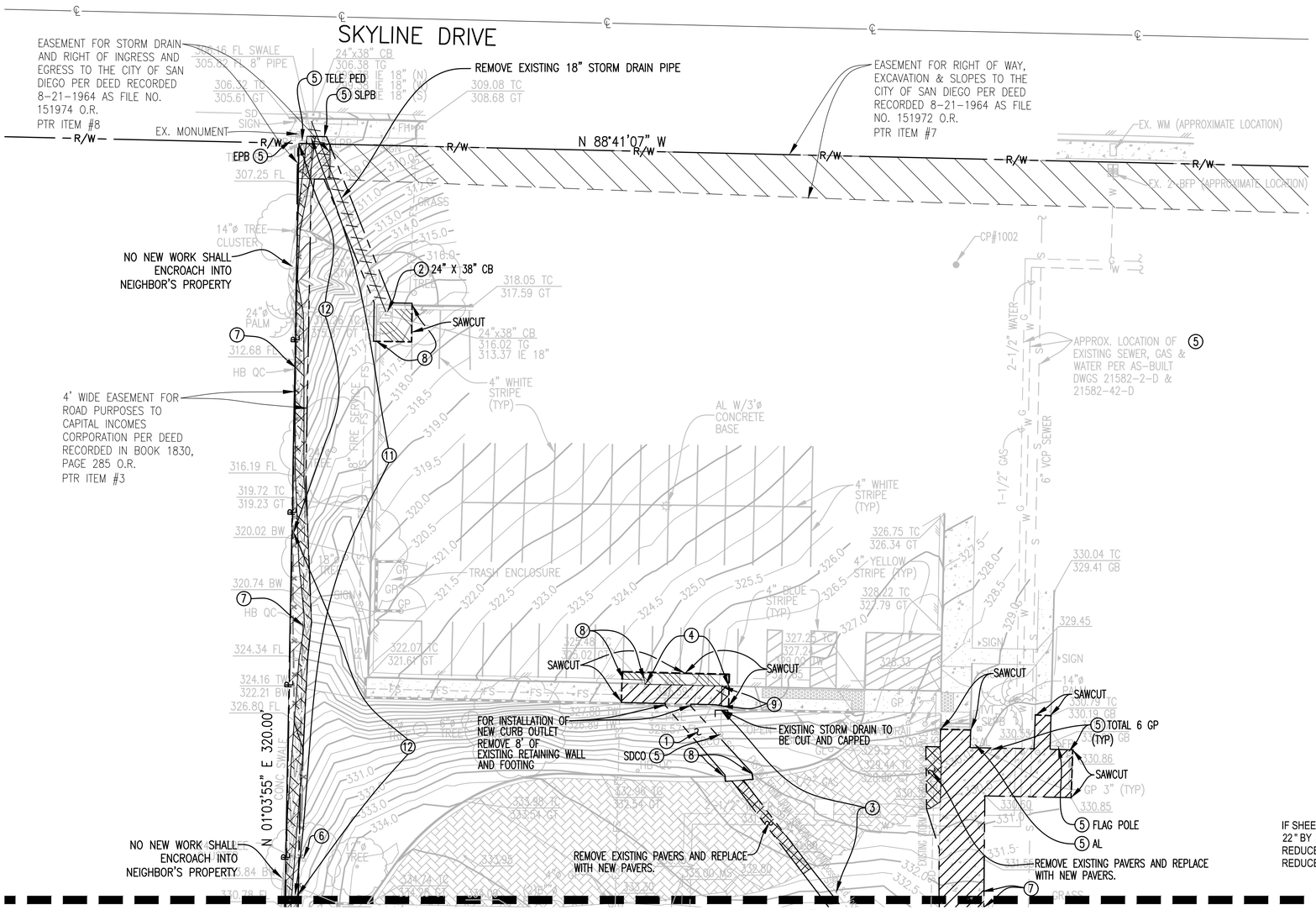

NOTES:

1. FOR ADDITIONAL INFORMATION, LEGEND, ABBREVIATIONS, BENCHMARK, HORIZONTAL CONTROL, SEE C-1 AND C-2.

DEMOLITION LEGEND:

- REMOVE EXISTING CONCRETE SIDEWALK COMPLETELY
- REMOVE EXISTING PAVERS AND BASE COMPLETELY
- REMOVE EXISTING CONCRETE BROW DITCH COMPLETELY
- REMOVE EXISTING ASPHALT PAVING AND BASE COMPLETELY
- SAWCUT
- LIMIT OF WORK
- REMOVE EXISTING UTILITY PIPE

DEMOLITION NOTES:

1. CLEAR AND GRUB
2. REMOVE EXISTING CATCH BASIN (1 – 24" X 38")
3. ABANDON EXISTING STORM DRAIN
4. REMOVE EXISTING CURB
5. PROTECT IN PLACE
6. REMOVE EXISTING TREE & ROOTS COMPLETELY
7. REMOVE EXISTING HOSE BIBB QUICK CONNECT
8. REMOVE EXISTING CURB & GUTTER
9. REMOVE EXISTING STORM DRAIN PIPE
10. NOT USED
11. REMOVE EXISTING CONC. BROW DITCH WITHIN PROPERTY LINE
12. REMOVE EXISTING FENCE, POSTS AND FOOTINGS COMPLETELY

N

SCALE 1"=20'

GRAPHIC SCALE

IF SHEET IS LESS THAN 22" BY 34" IT IS A REDUCED PRINT-SCALE REDUCE ACCORDINGLY

0 5' 10' 20' 40' 60'

SCALE: 1" = 20'

*ADDITIONAL NOTES TO PROTECT EXISTING TREES WITHIN THE AREA OF WORK:

1. A BRIGHT YELLOW OR ORANGE TEMPORARY FENCE WILL BE PLACED AROUND EXISTING TREES AT THE DRIP LINE.
2. STOCKPILING, TOPSOIL DISTURBANCE, VEHICLE USE, AND MATERIAL STORAGE OF ANY KIND IS PROHIBITED WITHIN THE DRIP LINE.
3. A TREE WATERING SCHEDULE WILL BE MAINTAINED AND DOCUMENTED DURING CONSTRUCTION.
4. ALL DAMAGED TREES WILL BE REPLACED WITH ONE OF EQUAL OR GREATER SIZE.

MLK Recreation Center Moisture Intrusion

C-4

AS-BUILT INFORMATION

MATERIALS	MANUFACTURER
–	–
–	–
–	–
–	–

CONSULTANT

SPEC. NO. 1945

PLANS FOR THE CONSTRUCTION OF
MLK Recreation Center Moisture Intrusion

DEMOLITION PLAN

CITY OF SAN DIEGO, CALIFORNIA
ENGINEERING & CAPITAL PROJECTS DEPARTMENT
SHEET 7 OF 33 SHEETS

WBS B 19001

CONSTRUCTION CHANGE / ADDENDUM

CHANGE	DATE	AFFECTED OR ADDED SHEET NUMBERS	APPROVAL NO.

WARNING

0 1

IF THIS BAR DOES NOT MEASURE 1" THEN DRAWING IS NOT TO SCALE.

The City of SAN DIEGO Engineering & Capital Projects

ENGINEER OF WORK:

BDS Engineering, Inc.
Civil Engineering
Land Surveying
5575 Lake Park Way, Suite 114
La Mesa, California 91942
(619) 582-4992 FAX (619) 582-7428

THOMAS A. JONES R.C.E. 34867 — DATE 07-29-2021 — JOB NO. 18-22

REGISTERED PROFESSIONAL ENGINEER THOMAS A. JONES 34867 EXP. 9-30-23 CIV IL STATE OF CALIFORNIA 07-29-2021

APPROVED:
FOR CITY ENGINEER — DATE
ELIZABETH SCHROTH-NICHOLS — C-B0228
DEPUTY CITY ENGINEER — RCE#

DESCRIPTION	BY	APPROVED	DATE	FILMED
ORIGINAL	BDS			

CONTRACTOR — DATE STARTED
INSPECTOR — DATE COMPLETED

SUBMITTED BY: DELFA GENOVA, PROJECT MANAGER
CHECKED BY: REZA RASHIDIAN, PROJECT ENGINEER

194-1749 CCS27 COORDINATE
1834-6309 CCS83 COORDINATE

40821- 7 -D

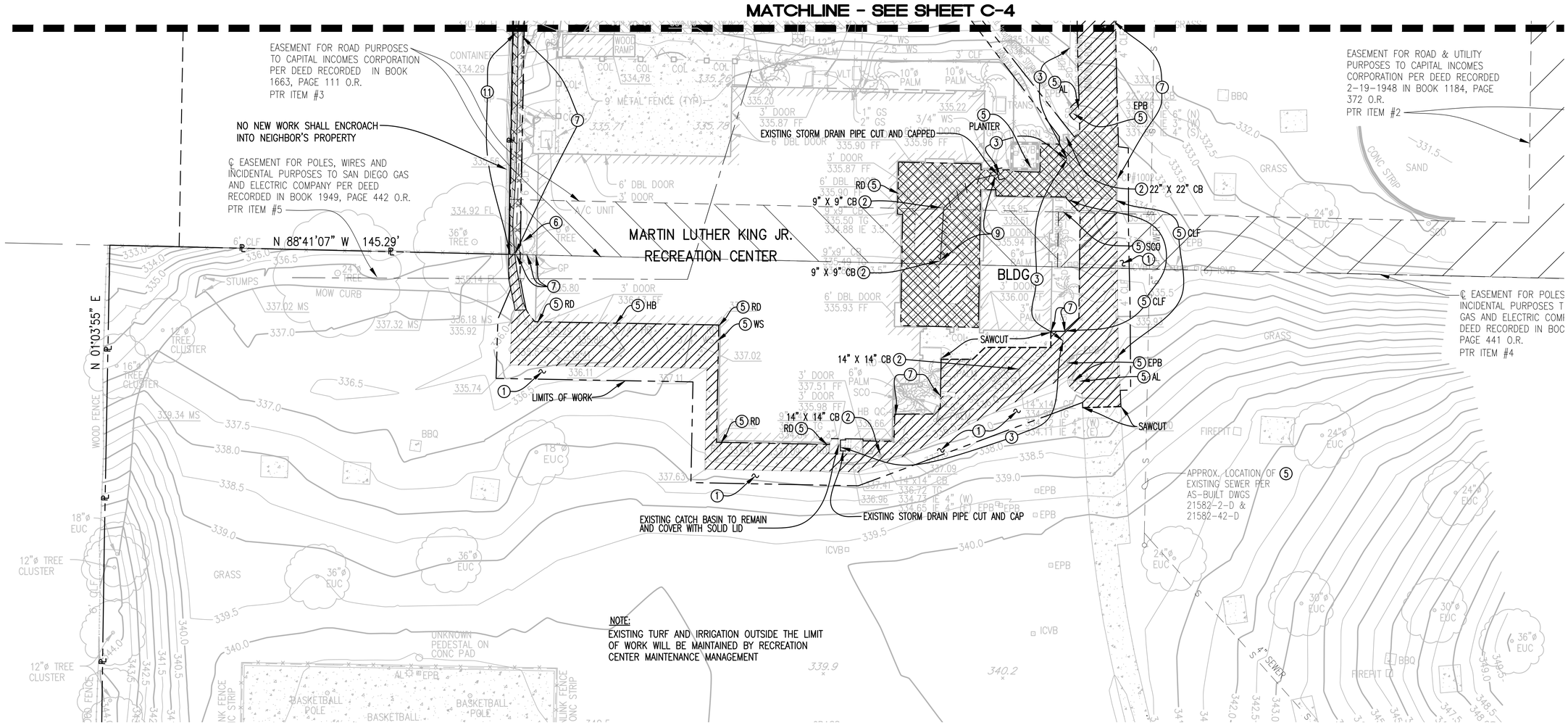

NOTE:
EXISTING TURF AND IRRIGATION OUTSIDE THE LIMIT OF WORK WILL BE MAINTAINED BY RECREATION CENTER MAINTENANCE MANAGEMENT

NOTES:

1. FOR ADDITIONAL INFORMATION, LEGEND, ABBREVIATIONS, BENCHMARK, HORIZONTAL CONTROL, SEE C-1 AND C-2.

DEMOLITION LEGEND:

- REMOVE EXISTING CONCRETE SIDEWALK COMPLETELY
- REMOVE EXISTING PAVERS COMPLETELY
- REMOVE EXISTING CONCRETE BROW DITCH COMPLETELY
- SAWCUT
- LIMIT OF WORK
- REMOVE EXISTING UTILITY

DEMOLITION NOTES:

1. CLEAR AND GRUB
2. REMOVE EXISTING CATCH BASIN (2 – 14" X 14", 2 – 9" X 9", 1 – 22" X 22")
3. ABANDON EXISTING STORM DRAIN
5. PROTECT IN PLACE
6. REMOVE EXISTING TREE & ROOTS COMPLETELY
7. REMOVE EXISTING FENCE, POSTS AND FOOTINGS COMPLETELY
9. REMOVE EXISTING STORM DRAIN PIPE
11. REMOVE EXISTING CONC. BROW DITCH WITHIN PROPERTY LINE

*ADDITIONAL NOTES TO PROTECT EXISTING TREES WITHIN THE AREA OF WORK:

1. A BRIGHT YELLOW OR ORANGE TEMPORARY FENCE WILL BE PLACED AROUND EXISTING TREES AT THE DRIP LINE.
2. STOCKPILING, TOPSOIL DISTURBANCE, VEHICLE USE, AND MATERIAL STORAGE OF ANY KIND IS PROHIBITED WITHIN THE DRIP LINE.
3. A TREE WATERING SCHEDULE WILL BE MAINTAINED AND DOCUMENTED DURING CONSTRUCTION.
4. ALL DAMAGED TREES WILL BE REPLACED WITH ONE OF EQUAL OR GREATER SIZE.

IF SHEET IS LESS THAN 22" BY 34" IT IS A REDUCED PRINT-SCALE REDUCE ACCORDINGLY

GRAPHIC SCALE
0 5' 10' 20' 40' 60'
SCALE: 1" = 20'

N
SCALE 1"=20'

C-5

AS-BUILT INFORMATION	
MATERIALS	MANUFACTURER
–	–
–	–
–	–
–	–

PLANS FOR THE CONSTRUCTION OF
MLK Recreation Center Moisture Intrusion

DEMOLITION PLAN

CONSULTANT

SPEC. NO. 1945

CITY OF SAN DIEGO, CALIFORNIA
ENGINEERING & CAPITAL PROJECTS DEPARTMENT
SHEET 8 OF 33 SHEETS

WBS B 19001

CONSTRUCTION CHANGE / ADDENDUM

CHANGE	DATE	AFFECTED OR ADDED SHEET NUMBERS	APPROVAL NO.

WARNING
0 1
IF THIS BAR DOES NOT MEASURE 1" THEN DRAWING IS NOT TO SCALE.

The City of SAN DIEGO Engineering & Capital Projects

ENGINEER OF WORK:
BDS Engineering, Inc.
Civil Engineering
Land Surveying
5575 Lake Park Way, Suite 114
La Mesa, California 91942
(619) 582-4992 FAX (619) 582-7428

THOMAS A. JONES R.C.E. 34867 — 07-29-2021 DATE — 18-22 JOB NO.

REGISTERED PROFESSIONAL ENGINEER THOMAS A. JONES 34867 EXP. 9-30-23 CIVIL STATE OF CALIFORNIA 07-29-2021

APPROVED:
FOR CITY ENGINEER
ELIZABETH SCHROTH-NICHOLS
DEPUTY CITY ENGINEER
DATE
C-80228
RCE#

DESCRIPTION	BY	APPROVED	DATE	FILMED
ORIGINAL	BDS			

CONTRACTOR
INSPECTOR
DATE STARTED
DATE COMPLETED

SUBMITTED BY:
DELFA GENOVA
PROJECT MANAGER
CHECKED BY:
REZA RASHIDIAN
PROJECT ENGINEER

194-1749
CCS27 COORDINATE

1834-6309
CCS83 COORDINATE

40821- 8 -D

MLK Recreation Center Moisture Intrusion

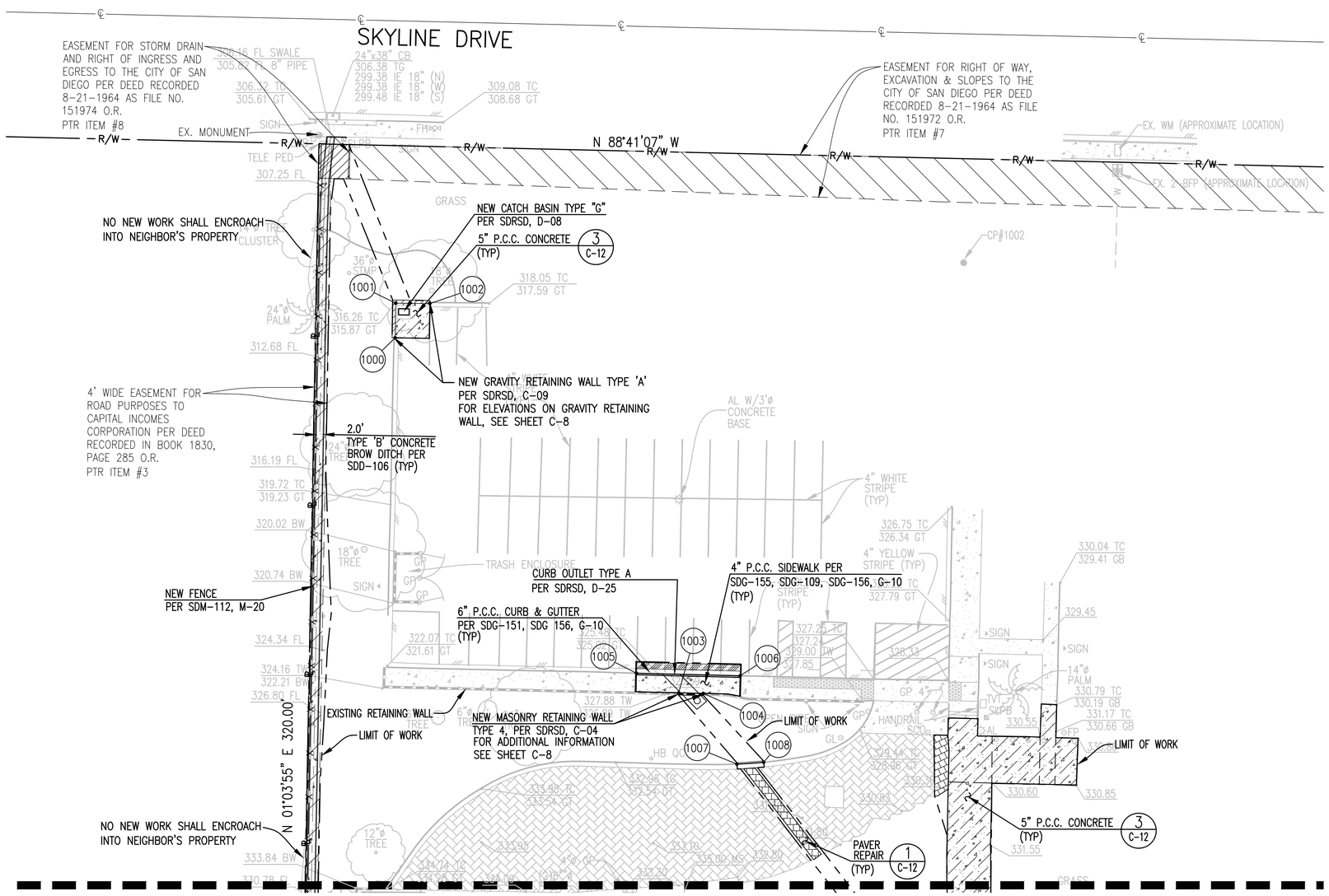

NOTES:

1. FOR ADDITIONAL INFORMATION, LEGEND, ABBREVIATIONS, BENCHMARK, HORIZONTAL CONTROL, SEE C-1 AND C-2.
2. FOR ADDITIONAL INFORMATION ON CONCRETE SIDEWALK CONTROL JOINTS, SEE ARCHITECTURAL AS-1.1

LEGEND:

ALL EXISTING ITEMS ARE SCREENED

4" P.C.C. SIDEWALK	SDG-109, SDG-155, SDG-156, G-10
5" P.C.C. CONCRETE	3 / C-12
SCHEDULE 'J' PAVEMENT	SDG-113
CURB AND GUTTER TYPE 'G'	SDG-151, SDG 156
PAVER REPAIR	1 / C-12
CONCRETE BROW DITCH TYPE 'B'	SDD-106
GRAVITY RETAINING WALL TYPE 'A'	C-09
CURB OUTLET TYPE A	D-25
MASONRY RETAINING WALL TYPE 4	C-04
FENCE	SDM-112, M-20
LIMIT OF WORK	
CATCH BASIN TYPE "G"	SDRSD, D-08

COORDINATE LIST

PT.#	NORTHING	EASTING	DESCRIPTION
1000	1835829.99	6312018.17	BEGIN GRAVITY WALL TYPE 'A'
1001	1835841.11	6312018.36	ANGLE PT. GRAVITY WALL TYPE 'A'
1002	1835840.96	6312029.29	END GRAVITY WALL TYPE 'A'
1003	1835716.22	6312109.00	BEGIN RETAINING WALL TYPE 4
1004	1835716.03	6312116.89	END RETAINING WALL TYPE 4
1005	1835722.48	6312095.47	BEGIN CURB & GUTTER
1006	1835721.67	6312128.68	END CURB & GUTTER
1007	1835693.36	6312127.65	BEGIN CURB & GUTTER
1008	1835693.94	6312136.22	END CURB & GUTTER

IF SHEET IS LESS THAN 22" BY 34" IT IS A REDUCED PRINT-SCALE REDUCE ACCORDINGLY

GRAPHIC SCALE

0 5' 10' 20' 40' 60'

SCALE: 1" = 20'

N

SCALE 1"=20'

C-6

MLK Recreation Center Moisture Intrusion

AS-BUILT INFORMATION	
MATERIALS	MANUFACTURER
–	–
–	–
–	–
–	–

PLANS FOR THE CONSTRUCTION OF
MLK Recreation Center Moisture Intrusion

SITE AND PAVING PLAN

CONSULTANT

SPEC. NO. 1945

CITY OF SAN DIEGO, CALIFORNIA
ENGINEERING & CAPITAL PROJECTS DEPARTMENT
SHEET 9 OF 33 SHEETS

WBS B 19001

CONSTRUCTION CHANGE / ADDENDUM

CHANGE	DATE	AFFECTED OR ADDED SHEET NUMBERS	APPROVAL NO.

WARNING

0 1

IF THIS BAR DOES NOT MEASURE 1" THEN DRAWING IS NOT TO SCALE.

The City of SAN DIEGO Engineering & Capital Projects

ENGINEER OF WORK:

BDS Engineering, Inc.
Civil Engineering
Land Surveying
5575 Lake Park Way, Suite 114
La Mesa, California 91942
(619) 582-4992 FAX (619) 582-7428

THOMAS A. JONES R.C.E. 34867 — DATE 07-29-2021 — JOB NO. 18-22

REGISTERED PROFESSIONAL ENGINEER THOMAS A. JONES 34867 EXP. 9-30-23 CIV IL STATE OF CALIFORNIA 07-29-2021

APPROVED:
FOR CITY ENGINEER — DATE
ELIZABETH SCHROTH-NICHOLS — C-80228
DEPUTY CITY ENGINEER — RCE#

DESCRIPTION	BY	APPROVED	DATE	FILMED
ORIGINAL	BDS			

CONTRACTOR — DATE STARTED
INSPECTOR — DATE COMPLETED

SUBMITTED BY: DELFA GENOVA, PROJECT MANAGER
CHECKED BY: REZA RASHIDIAN, PROJECT ENGINEER

194-1749 CCS27 COORDINATE
1834-6309 CCS83 COORDINATE

40821- 9 -D

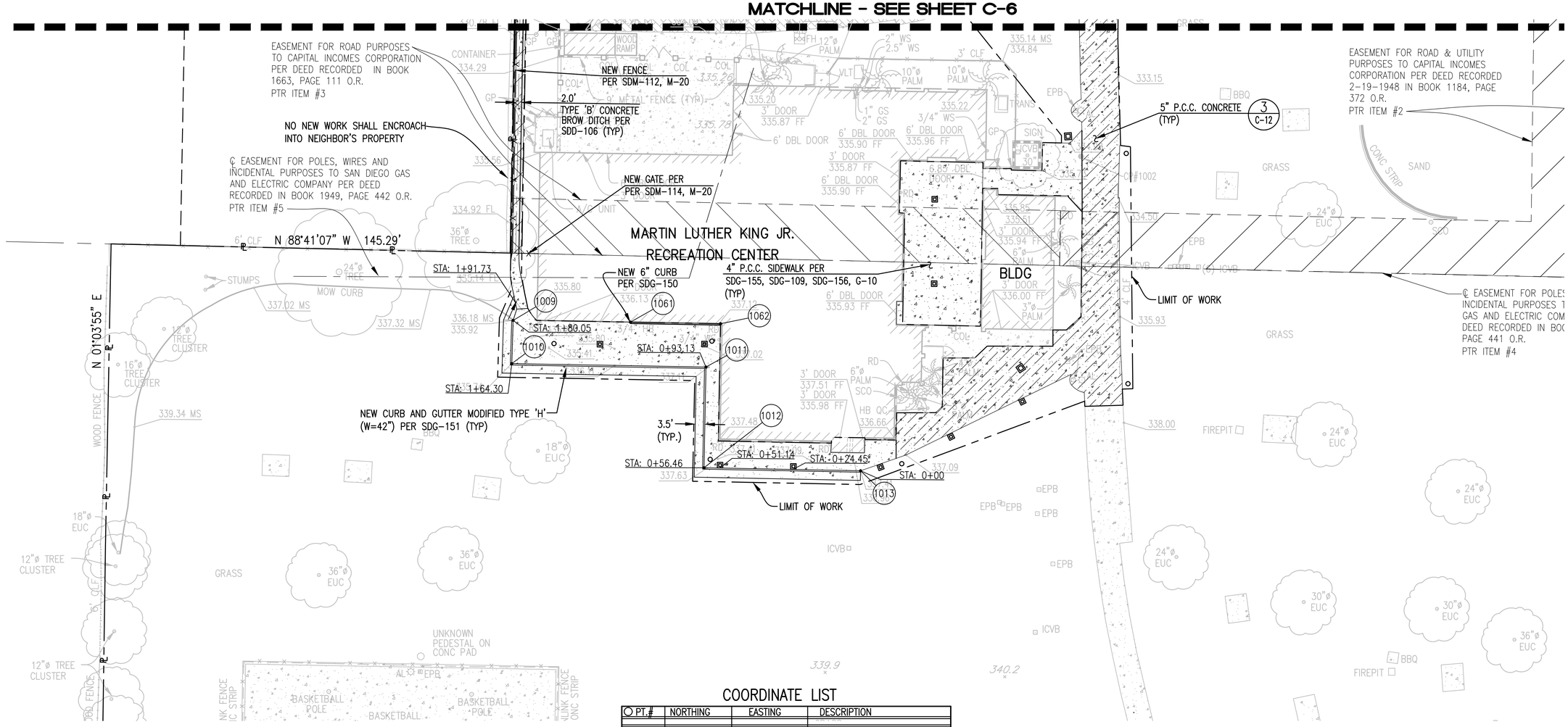

NOTES:

1. FOR ADDITIONAL INFORMATION, LEGEND, ABBREVIATIONS, BENCHMARK, HORIZONTAL CONTROL, SEE C-1 AND C-2.
2. FOR ADDITIONAL INFORMATION ON CONCRETE SIDEWALK CONTROL JOINTS, SEE ARCHITECTURAL AS-1.1

LEGEND:

ALL EXISTING ITEMS ARE SCREENED

4" P.C.C. SIDEWALK	SDG-155, SDG-109, SDG-156, G-10
5" P.C.C. CONCRETE	3 / C-12
CURB AND GUTTER MODIFIED TYPE 'H' (W=42")	SDG-151
6" CURB	SDG-150, SDG-109, G-10
CONCRETE BROW DITCH TYPE 'B'	SDD-106
FENCE AND GATE	SDM-112, SDM-114, M-20
LIMIT OF WORK	

COORDINATE LIST

PT.#	NORTHING	EASTING	DESCRIPTION
1009	1835547.69	6311989.13	BEGIN CURB & GUTTER
1010	1835531.95	6311988.64	ANGLE PT. CURB & GUTTER
1011	1835530.70	6312059.30	ANGLE PT. CUBR & GUTTER
1012	1835494.04	6312058.61	ANGLE PT. CURB & GUTTER
1013	1835492.93	6312115.58	END CURB & GUTTER
1037	NOT USED		
1038	NOT USED		
1039	NOT USED		
1040	NOT USED		
1041	NOT USED		
1042	NOT USED		
1061	1835547.06	6312031.83	BEGINNING OF CURB
1062	1835546.48	6312064.60	END OF CURB
1063	NOT USED		

IF SHEET IS LESS THAN 22" BY 34" IT IS A REDUCED PRINT-SCALE REDUCE ACCORDINGLY

GRAPHIC SCALE

0 5' 10' 20' 40' 60'

SCALE: 1" = 20'

N

SCALE 1"=20'

C-7

MLK Recreation Center Moisture Intrusion

AS-BUILT INFORMATION

MATERIALS	MANUFACTURER
–	–
–	–
–	–
–	–

PLANS FOR THE CONSTRUCTION OF
MLK Recreation Center Moisture Intrusion

SITE AND PAVING PLAN

CONSULTANT

SPEC. NO. 1945

CITY OF SAN DIEGO, CALIFORNIA
ENGINEERING & CAPITAL PROJECTS DEPARTMENT
SHEET 10 OF 33 SHEETS

WBS B 19001

CONSTRUCTION CHANGE / ADDENDUM

CHANGE	DATE	AFFECTED OR ADDED SHEET NUMBERS	APPROVAL NO.

WARNING

0 1

IF THIS BAR DOES NOT MEASURE 1" THEN DRAWING IS NOT TO SCALE.

The City of SAN DIEGO Engineering & Capital Projects

ENGINEER OF WORK:

BDS Engineering, Inc.
Civil Engineering
Land Surveying
5575 Lake Park Way, Suite 114
La Mesa, California 91942
(619) 582-4992 FAX (619) 582-7428

Thomas A. Jones

THOMAS A. JONES R.C.E. 34867 — 07-29-2021 DATE — 18-22 JOB NO.

REGISTERED PROFESSIONAL ENGINEER THOMAS A. JONES 34867 EXP. 9-30-23 CIVIL STATE OF CALIFORNIA 07-29-2021

APPROVED:
FOR CITY ENGINEER
ELIZABETH SCHROTH-NICHOLS
DEPUTY CITY ENGINEER
DATE
C-80228
RCE#

DESCRIPTION	BY	APPROVED	DATE	FILMED
ORIGINAL	BDS			

CONTRACTOR
INSPECTOR
DATE STARTED
DATE COMPLETED

SUBMITTED BY:
DELFA GENOVA
PROJECT MANAGER

CHECKED BY:
REZA RASHIDIAN
PROJECT ENGINEER

194-1749
CCS27 COORDINATE

1834-6309
CCS83 COORDINATE

40821-10-D

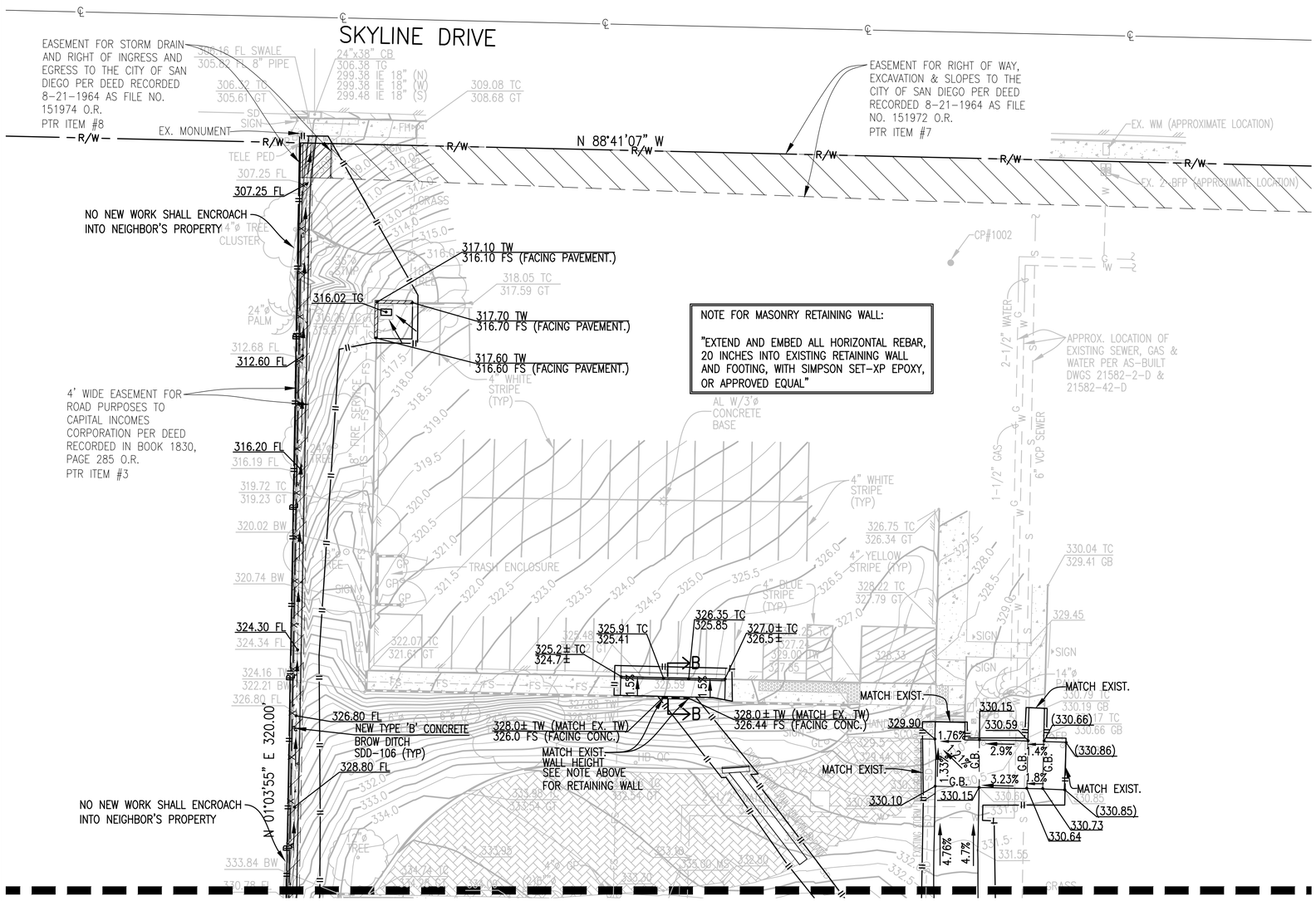

MATCHLINE - SEE SHEET C-9

NOTES:

1. FOR ADDITIONAL INFORMATION, LEGEND, ABBREVIATIONS, BENCHMARK, AND HORIZONTAL CONTROL, SEE C-1 AND C-2.
2. FOR ADDITIONAL INFORMATION SEE ARCHITECTURAL, ELECTRICAL, MECHANICAL, PLUMBING, STRUCTURAL AND LANDSCAPE DRAWINGS.
3. VERIFY THE LOCATION OF ALL EXISTING UTILITIES PRIOR TO CONSTRUCTION, AND TO PROTECT EXISTING UTILITIES DURING CONSTRUCTION UNLESS NOTED OTHERWISE.
4. ADJUST ALL EXISTING GRATES, COVERS, MANHOLE LIDS ETC. WITHIN THE AREA OF WORK TO FINISH GRADE.
5. ALL ROOF DRAIN LATERALS SHALL BE AT A MINIMUM SLOPE OF 1% UNLESS NOTED OTHERWISE.

LEGEND:

ALL EXISTING ITEMS ARE SCREENED

EXISTING SPOT ELEVATION	(422.50)
NEW SPOT ELEVATION	422.50 TC / 422.00
DIRECTION OF FLOW	
DAYLIGHT LINE	
GRADE BREAK	

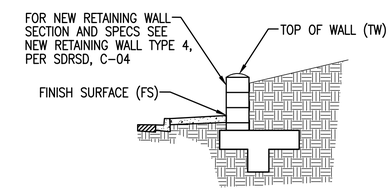

SECTION B-B
NOT TO SCALE

IF SHEET IS LESS THAN 22" BY 34" IT IS A REDUCED PRINT-SCALE REDUCE ACCORDINGLY

GRAPHIC SCALE
0 5' 10' 20' 40' 60'
SCALE: 1" = 20'

N
SCALE 1"=20'

MLK Recreation Center Moisture Intrusion

C-8

AS-BUILT INFORMATION	
MATERIALS	MANUFACTURER
–	–
–	–
–	–
–	–

PLANS FOR THE CONSTRUCTION OF
MLK Recreation Center Moisture Intrusion

GRADING / DRAINAGE PLAN

CONSULTANT

SPEC. NO. 1945

CITY OF SAN DIEGO, CALIFORNIA
ENGINEERING & CAPITAL PROJECTS DEPARTMENT
SHEET 11 OF 33 SHEETS

WBS B 19001

CONSTRUCTION CHANGE / ADDENDUM

CHANGE	DATE	AFFECTED OR ADDED SHEET NUMBERS	APPROVAL NO.

WARNING
0 1
IF THIS BAR DOES NOT MEASURE 1" THEN DRAWING IS NOT TO SCALE.

The City of SAN DIEGO Engineering & Capital Projects

ENGINEER OF WORK:
BDS Engineering, Inc.
Civil Engineering
Land Surveying
5575 Lake Park Way, Suite 114
La Mesa, California 91942
(619) 582-4992 FAX (619) 582-7428

Thomas A. Jones
THOMAS A. JONES R.C.E. 34867 — DATE 07-29-2021 — JOB NO. 18-22

REGISTERED PROFESSIONAL ENGINEER THOMAS A. JONES 34867 EXP. 9-30-23 CIVIL STATE OF CALIFORNIA 07-29-2021

APPROVED:
FOR CITY ENGINEER — DATE
ELIZABETH SCHROTH-NICHOLS — C-80228
DEPUTY CITY ENGINEER — RCE#

DESCRIPTION	BY	APPROVED	DATE	FILMED
ORIGINAL	BDS			

SUBMITTED BY: DELFA GENOVA, PROJECT MANAGER
CHECKED BY: REZA RASHIDIAN, PROJECT ENGINEER

194-1749 CCS27 COORDINATE
1834-6309 CCS83 COORDINATE

CONTRACTOR INSPECTOR — DATE STARTED — DATE COMPLETED

40821-11-D

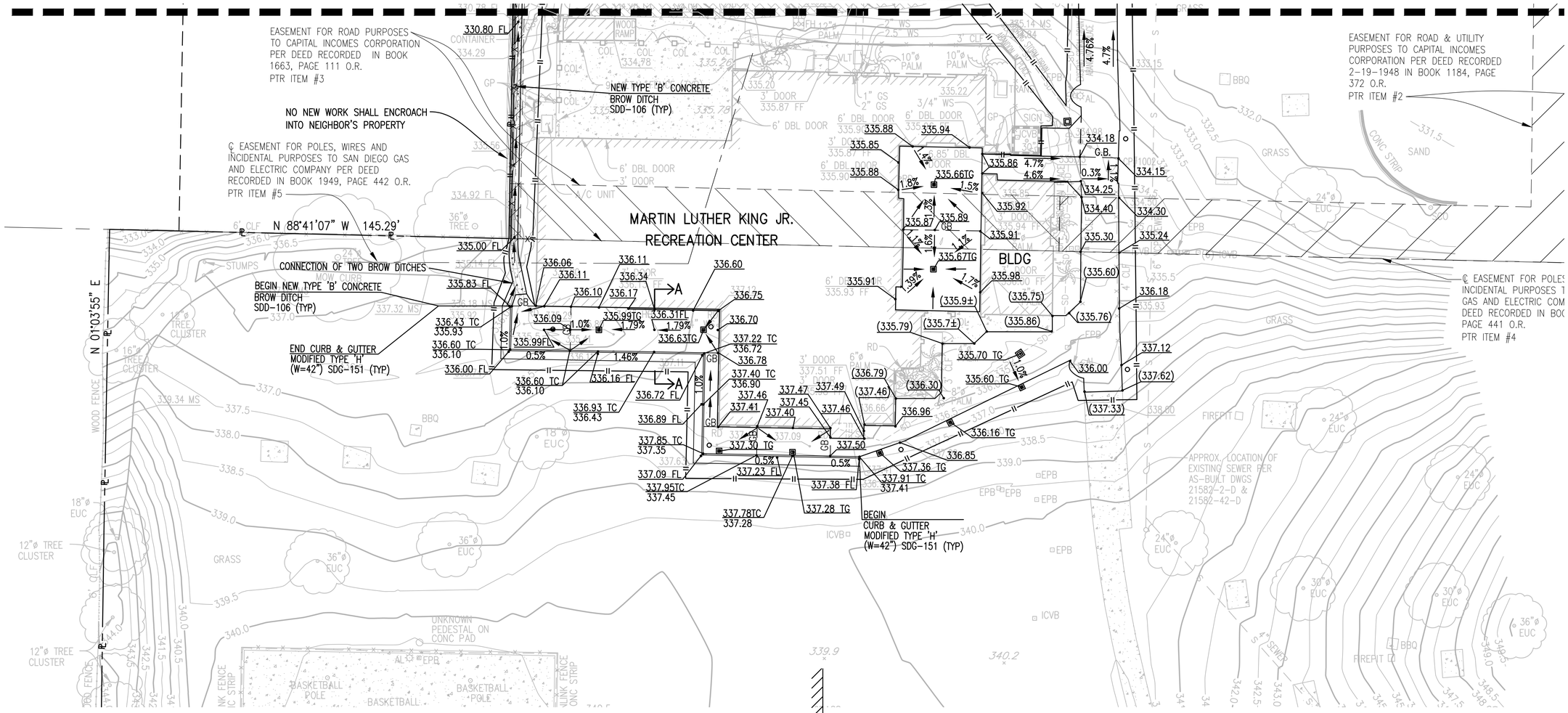

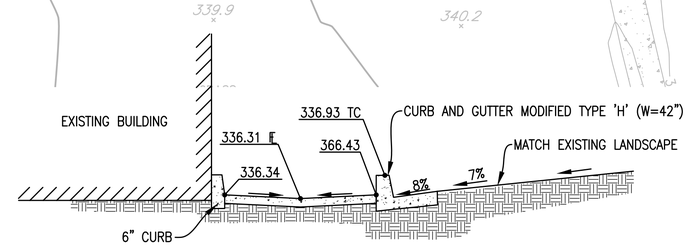

SECTION A-A

NOTES:

1. FOR ADDITIONAL INFORMATION, LEGEND, ABBREVIATIONS, BENCHMARK, AND HORIZONTAL CONTROL, SEE C-1 AND C-2.
2. FOR ADDITIONAL INFORMATION SEE ARCHITECTURAL, ELECTRICAL, MECHANICAL, PLUMBING, STRUCTURAL AND LANDSCAPE DRAWINGS.
3. VERIFY THE LOCATION OF ALL EXISTING UTILITIES PRIOR TO CONSTRUCTION, AND TO PROTECT EXISTING UTILITIES DURING CONSTRUCTION UNLESS NOTED OTHERWISE.
4. ADJUST ALL EXISTING GRATES, COVERS, MANHOLE LIDS ETC. WITHIN THE AREA OF WORK TO FINISH GRADE.
5. ALL ROOF DRAIN LATERALS SHALL BE AT A MINIMUM SLOPE OF 1% UNLESS NOTED OTHERWISE.

LEGEND:

ALL EXISTING ITEMS ARE SCREENED

EXISTING SPOT ELEVATION	(422.50)
NEW SPOT ELEVATION	422.50 TC 422.00
DIRECTION OF FLOW	→ →
DAYLIGHT LINE	–II———II–
GRADE BREAK	— — —

IF SHEET IS LESS THAN 22" BY 34" IT IS A REDUCED PRINT-SCALE REDUCE ACCORDINGLY

GRAPHIC SCALE

0 5' 10' 20' 40' 60'

SCALE: 1" = 20'

N

SCALE 1"=20'

C-9

MLK Recreation Center Moisture Intrusion

AS-BUILT INFORMATION

MATERIALS	MANUFACTURER
–	–
–	–
–	–
–	–

PLANS FOR THE CONSTRUCTION OF
MLK Recreation Center Moisture Intrusion

GRADING / DRAINAGE PLAN

CONSULTANT

SPEC. NO. 1945

CITY OF SAN DIEGO, CALIFORNIA
ENGINEERING & CAPITAL PROJECTS DEPARTMENT
SHEET 12 OF 33 SHEETS

WBS B 19001

CONSTRUCTION CHANGE / ADDENDUM

CHANGE	DATE	AFFECTED OR ADDED SHEET NUMBERS	APPROVAL NO.

WARNING

0 1

IF THIS BAR DOES NOT MEASURE 1" THEN DRAWING IS NOT TO SCALE.

The City of SAN DIEGO Engineering & Capital Projects

ENGINEER OF WORK:

BDS Engineering, Inc.
Civil Engineering
Land Surveying
5575 Lake Park Way, Suite 114
La Mesa, California 91942
(619) 582-4992 FAX (619) 582-7428

Thomas A. Jones

THOMAS A. JONES R.C.E. 34867 — DATE 07-29-2021 — JOB NO. 18-22

REGISTERED PROFESSIONAL ENGINEER THOMAS A. JONES 34867 EXP. 9-30-23 CIVIL STATE OF CALIFORNIA 07-29-2021

APPROVED:
FOR CITY ENGINEER — DATE
ELIZABETH SCHROTH-NICHOLS — C-80228
DEPUTY CITY ENGINEER — RCE#

DESCRIPTION	BY	APPROVED	DATE	FILMED
ORIGINAL	BDS			

CONTRACTOR
INSPECTOR

DATE STARTED
DATE COMPLETED

SUBMITTED BY:
DELFA GENOVA
PROJECT MANAGER

CHECKED BY:
REZA RASHIDIAN
PROJECT ENGINEER

194-1749
CCS27 COORDINATE

1834-6309
CCS83 COORDINATE

40821-12-D

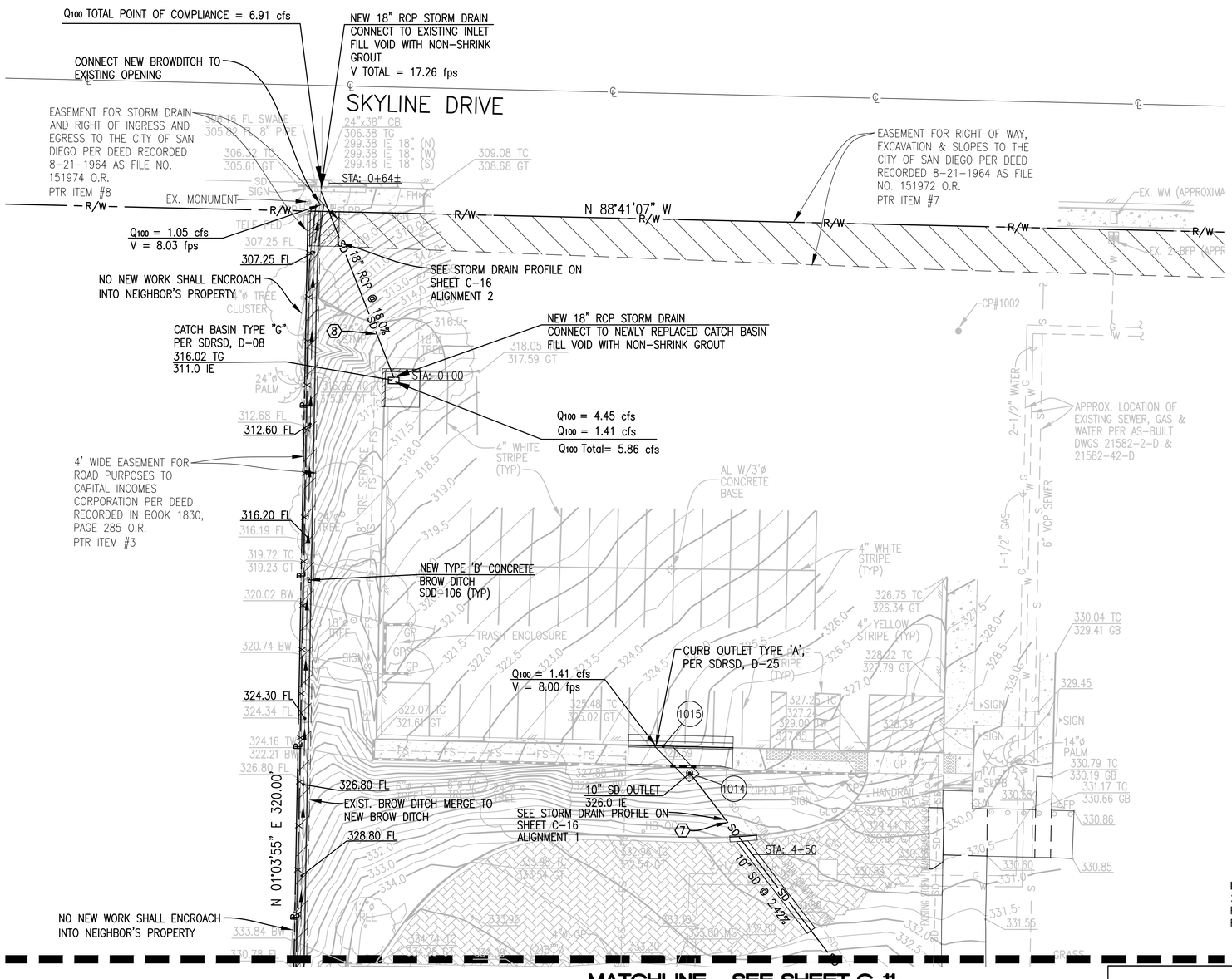

NOTES:

1. FOR ADDITIONAL INFORMATION, LEGEND, ABBREVIATIONS, BENCHMARK, AND HORIZONTAL CONTROL, SEE C-1 AND C-2.
2. FOR ADDITIONAL INFORMATION SEE ARCHITECTURAL, ELECTRICAL, MECHANICAL, PLUMBING, STRUCTURAL AND LANDSCAPE DRAWINGS.
3. VERIFY THE LOCATION OF ALL EXISTING UTILITIES PRIOR TO CONSTRUCTION, AND TO PROTECT EXISTING UTILITIES DURING CONSTRUCTION UNLESS NOTED OTHERWISE.
4. ADJUST ALL EXISTING GRATES, COVERS, MANHOLE LIDS ETC. WITHIN THE AREA OF WORK TO FINISH GRADE.
5. ALL ROOF DRAIN LATERALS SHALL BE AT A MINIMUM SLOPE OF 1% UNLESS NOTED OTHERWISE.

MINIMUM TREE SEPARATION DISTANCE:

TRAFFIC SIGNALS / STOP SIGNS – 20 FEET
UNDERGROUND UTILITY LINES – 5 FEET (10' FOR SEWER)
ABOVE GROUND UTILITY STRUCTURES – 10 FEET
DRIVEWAYS (ENTRIES) – 10'
INTERSECTIONS (INTERSECTING CURB LINES OF TWO STREETS) – 25 FEET
*5 FEET ON RESIDENTIAL STREETS RATED AT 25 MPH OR LOWER.

LEGEND:

ALL EXISTING ITEMS ARE SCREENED

STORM DRAIN	SDD-110	—— SD ——
CLEANOUT FOR UNDERDRAIN	SDSW-101	—— SD ——○ CO
12"x12" CATCH BASIN	6 C-12	
24"x24" CATCH BASIN	5 C-12	
18"x18" CATCH BASIN	4 C-12	
CURB OUTLET TYPE A	D-25A	—— SD ——[ ]
CATCH BASIN TYPE "G"	SDRSD, D-08	

N

SCALE 1"=20'

GRAPHIC SCALE

IF SHEET IS LESS THAN 22" BY 34" IT IS A REDUCED PRINT-SCALE REDUCE ACCORDINGLY

0 5' 10' 20' 40' 60'

SCALE: 1" = 20'

STORM DRAIN INLET STRUCTURE SCHEDULE

6 C-12	12" x 12" CATCH BASIN	330.00 TG 326.00 IE	1
4 C-12	18" x 18" CATCH BASIN	330.00 TG 326.00 IE	2
5 C-12	24" x 24" CATCH BASIN	330.00 TG 326.00 IE	3

C-10

STORM DRAIN DATA TABLE

NO.	DELTA OR BRG.	RADIUS	LENGTH	ALIGNMENT	REMARKS
7	N 37°33'40" W	–	122.97'	1	10" PVC
8	N 21°20'10" W	–	63.36'	2	18" RCP

COORDINATE LIST

PT.#	NORTHING	EASTING	DESCRIPTION
1014	1835713.64	6312115.15	SDCO CNTR. CURB OUTLET
1015	1835722.23	6312106.79	

AS-BUILT INFORMATION

MATERIALS	MANUFACTURER
–	–
–	–
–	–
–	–

PLANS FOR THE CONSTRUCTION OF MLK Recreation Center Moisture Intrusion

UTILITY PLAN

CONSULTANT

SPEC. NO. 1945

CITY OF SAN DIEGO, CALIFORNIA
ENGINEERING & CAPITAL PROJECTS DEPARTMENT
SHEET 13 OF 33 SHEETS

WBS B 19001

CONSTRUCTION CHANGE / ADDENDUM

CHANGE	DATE	AFFECTED OR ADDED SHEET NUMBERS	APPROVAL NO.

WARNING

0 1

IF THIS BAR DOES NOT MEASURE 1" THEN DRAWING IS NOT TO SCALE.

The City of SAN DIEGO Engineering & Capital Projects

ENGINEER OF WORK:
BDS Engineering, Inc.
Civil Engineering
Land Surveying
5575 Lake Park Way, Suite 114
La Mesa, California 91942
(619) 582-4992 FAX (619) 582-7428
THOMAS A. JONES R.C.E. 34867

07-29-2021 DATE

18-22 JOB NO.

REGISTERED PROFESSIONAL ENGINEER THOMAS A. JONES 34867 EXP. 9-30-23 CIVIL STATE OF CALIFORNIA 07-29-2021

APPROVED:
FOR CITY ENGINEER
ELIZABETH SCHROTH-NICHOLS
DEPUTY CITY ENGINEER
DATE
C-80228
RCE#

DESCRIPTION	BY	APPROVED	DATE	FILMED
ORIGINAL	BDS			

CONTRACTOR
INSPECTOR
DATE STARTED
DATE COMPLETED

SUBMITTED BY: DELFA GENOVA, PROJECT MANAGER
CHECKED BY: REZA RASHIDIAN, PROJECT ENGINEER

194-1749 CCS27 COORDINATE
1834-6309 CCS83 COORDINATE

40821-13-D

MLK Recreation Center Moisture Intrusion

NOTES:

1. FOR ADDITIONAL INFORMATION, LEGEND, ABBREVIATIONS, BENCHMARK, AND HORIZONTAL CONTROL, SEE C-1 AND C-2.
2. FOR ADDITIONAL INFORMATION SEE ARCHITECTURAL, ELECTRICAL, MECHANICAL, PLUMBING, STRUCTURAL AND LANDSCAPE DRAWINGS.
3. VERIFY THE LOCATION OF ALL EXISTING UTILITIES PRIOR TO CONSTRUCTION, AND TO PROTECT EXISTING UTILITIES DURING CONSTRUCTION UNLESS NOTED OTHERWISE.
4. ADJUST ALL EXISTING GRATES, COVERS, MANHOLE LIDS ETC. WITHIN THE AREA OF WORK TO FINISH GRADE.
5. ALL ROOF DRAIN LATERALS SHALL BE AT A MINIMUM SLOPE OF 1% UNLESS NOTED OTHERWISE.
6. ALL WATER AND FIRE SERVICE LINES 4" OR LARGER, OR AS INDICATED ON PLAN, SHALL HAVE THRUST BLOCKS AT ALL VALVES AND CHANGES IN DIRECTION.

MINIMUM TREE SEPARATION DISTANCE:

TRAFFIC SIGNALS / STOP SIGNS – 20 FEET
UNDERGROUND UTILITY LINES – 5 FEET (10' FOR SEWER)
ABOVE GROUND UTILITY STRUCTURES – 10 FEET
DRIVEWAYS (ENTRIES) – 10'
INTERSECTIONS (INTERSECTING CURB LINES OF TWO STREETS) – 25 FEET
*5 FEET ON RESIDENTIAL STREETS RATED AT 25 MPH OR LOWER.

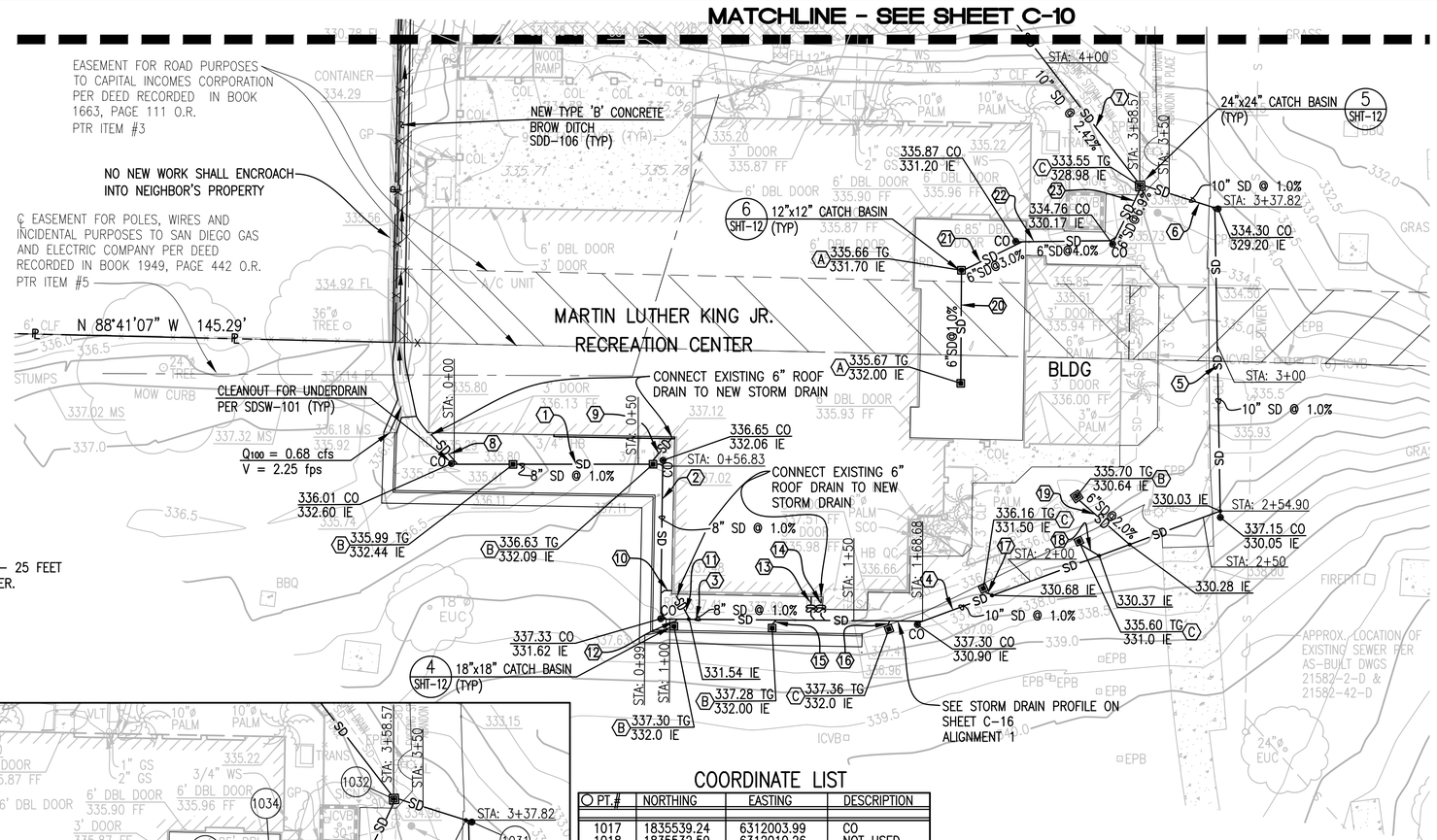

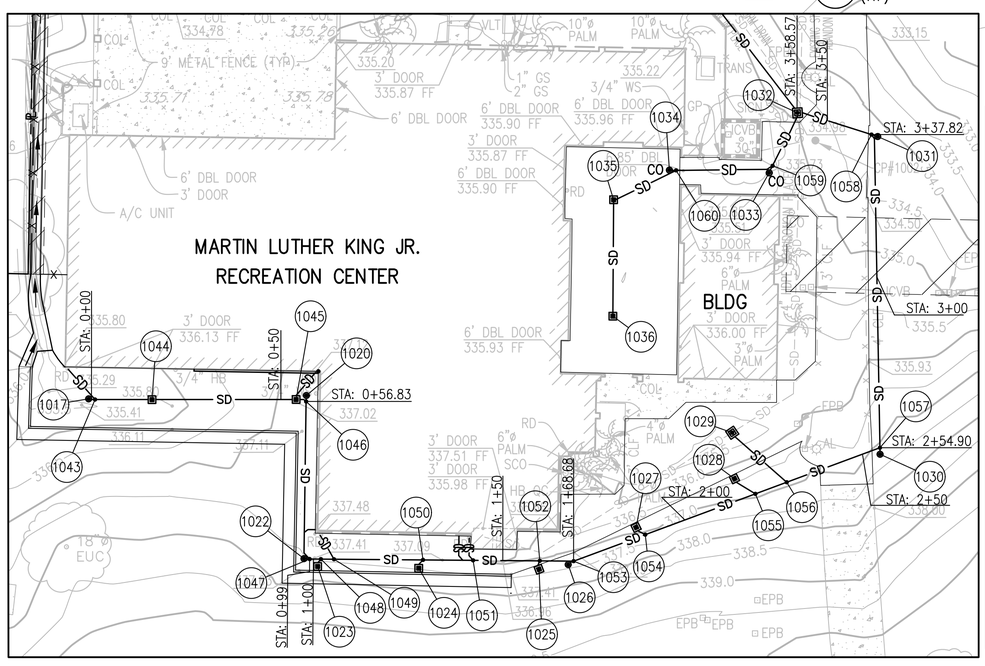

COORDINATE LIST

PT.#	NORTHING	EASTING	DESCRIPTION
1017	1835539.24	6312003.99	CO
1018	1835532.59	6312010.26	NOT USED
1019	1835531.93	6312050.07	NOT USED
1020	1835540.13	6312061.47	CO
1021	1835516.80	6312061.27	NOT USED
1022	1835497.07	6312060.84	CO
1023	1835495.01	6312064.45	CATCH BASIN
1024	1835494.54	6312091.14	CATCH BASIN
1025	1835494.25	6312122.88	CATCH BASIN
1026	1835495.49	6312130.58	CO
1027	1835505.32	6312148.50	CATCH BASIN
1028	1835518.16	6312174.48	CATCH BASIN
1029	1835530.30	6312173.88	CATCH BASIN
1030	1835524.62	6312212.91	CO
1031	1835608.48	6312212.28	CO
1032	1835614.74	6312191.11	CATCH BASIN
1033	1835598.90	6312183.62	CO
1034	1835599.61	6312157.30	CO
1035	1835591.79	6312142.57	CATCH BASIN
1036	1835561.06	6312142.38	CATCH BASIN
1043	1835539.06	6312005.69	WYE
1044	1835539.02	6312020.72	CATCH BASIN
1045	1835539.06	6312058.77	CATCH BASIN
1046	1835538.54	6312061.41	WYE
1047	1835496.96	6312062.33	WYE
1048	1835496.94	6312065.31	WYE
1049	1835496.91	6312068.76	WYE
1050	1835496.74	6312092.26	WYE
1051	1835496.62	6312105.48	WYE
1052	1835496.48	6312123.07	WYE
1053	1835496.41	6312132.00	WYE
1054	1835503.40	6312150.93	WYE
1055	1835514.17	6312179.99	WYE
1056	1835517.23	6312188.26	WYE
1057	1835526.34	6312212.87	WYE
1058	1835609.00	6312210.63	WYE
1059	1835600.76	6312184.54	WYE
1060	1835599.53	6312159.06	WYE

LEGEND:

ALL EXISTING ITEMS ARE SCREENED

STORM DRAIN	SDD-110, D-60	SD
CLEANOUT FOR UNDERDRAIN	SDSW-101	SD CO
12"x12" CATCH BASIN	6 C-12	
24"x24" CATCH BASIN	5 C-12	
18"x18" CATCH BASIN	4 C-12	
CURB OUTLET TYPE A MODIFIED	D-25A	SD

STORM DRAIN INLET STRUCTURE SCHEDULE

6 C-12	12" x 12" CATCH BASIN	330.00 TG 326.00 IE	A
4 C-12	18" x 18" CATCH BASIN	330.00 TG 326.00 IE	B
5 C-12	24" x 24" CATCH BASIN	330.00 TG 326.00 IE	C

STORM DRAIN DATA TABLE

NO.	DELTA OR BRG.	RADIUS	LENGTH	ALIGNMENT	REMARKS
1	N 89°45'42" E	–	55.07'	1	8" PVC STORM DRAIN PIPE
2	S 00°47'16" W	–	39.99'	1	8" PVC STORM DRAIN PIPE
3	S 89°32'52" E	–	69.68'	1	8" PVC STORM DRAIN PIPE
4	N 69°41'26" E	–	86.22'	1	10" PVC STORM DRAIN PIPE
5	N 01°00'49" W	–	81.54'	1	10" PVC STORM DRAIN PIPE
6	N 72°26'00" W	–	19.16'	1	10" PVC STORM DRAIN PIPE
7	N 37°33'40" W	–	122.97'	1	10" PVC STORM DRAIN PIPE
8	N 41°39'33" W	–	10.69'	–	6" PVC STORM DRAIN PIPE
9	N 40°10'33" E	–	8.03'	–	6" PVC STORM DRAIN PIPE
10	N 89°33'23" W	–	2.88'	–	6" PVC WALL SUBDRAIN PIPE
11	N 30°08'48" W	–	7.10'	–	6" PVC STORM DRAIN PIPE
12	N 39°29'27" E	–	1.22'	–	6" PVC STORM DRAIN PIPE
13	N 00°36'01" E	–	6.38'	–	6" PVC WALL SUBDRAIN PIPE
14	N 00°40'17" E	–	5.85'	–	6" PVC STORM DRAIN PIPE
15	N 42°54'29" E	–	1.66'	–	6" PVC STORM DRAIN PIPE
16	N 22°44'13" E	–	1.40'	–	6" PVC STORM DRAIN PIPE
17	N 62°33'05" W	–	2.24'	–	6" PVC STORM DRAIN PIPE
18	N 58°43'04" W	–	5.95'	–	6" PVC STORM DRAIN PIPE
19	N 48°40'17" W	–	18.22'	–	6" PVC STORM DRAIN PIPE
20	N 00°22'10" E	–	29.73'	–	6" PVC STORM DRAIN PIPE
21	N 65°10'54" E	–	17.77'	–	6" PVC STORM DRAIN PIPE
22	N 89°20'29" E	–	25.96'	–	6" PVC STORM DRAIN PIPE
23	N 26°44'35" E	–	16.09'	–	6" PVC STORM DRAIN PIPE

N

SCALE 1"=20'

IF SHEET IS LESS THAN 22" BY 34" IT IS A REDUCED PRINT-SCALE REDUCE ACCORDINGLY

GRAPHIC SCALE
0 5' 10' 20' 40' 60'
SCALE: 1" = 20'

C-11

MLK Recreation Center Moisture Intrusion

AS-BUILT INFORMATION	
MATERIALS	MANUFACTURER
–	–
–	–
–	–
–	–

PLANS FOR THE CONSTRUCTION OF
MLK Recreation Center Moisture Intrusion

UTILITY PLAN

CONSULTANT

SPEC. NO. 1945

CITY OF SAN DIEGO, CALIFORNIA
ENGINEERING & CAPITAL PROJECTS DEPARTMENT
SHEET 14 OF 33 SHEETS

WBS B 19001

ENGINEER OF WORK:
BDS Engineering, Inc.
Civil Engineering
Land Surveying
5575 Lake Park Way, Suite 114
La Mesa, California 91942
(619) 582-4992 FAX (619) 582-7428

THOMAS A. JONES R.C.E. 34867 — DATE 07-29-2021 — JOB NO. 18-22

REGISTERED PROFESSIONAL ENGINEER THOMAS A. JONES 34867 EXP. 9-30-23 CIVIL STATE OF CALIFORNIA 07-29-2021

APPROVED:
FOR CITY ENGINEER — DATE
ELIZABETH SCHROTH-NICHOLS — C-80228
DEPUTY CITY ENGINEER — RCE#

DESCRIPTION	BY	APPROVED	DATE	FILMED
ORIGINAL	BDS			

SUBMITTED BY: DELFA GENOVA, PROJECT MANAGER
CHECKED BY: REZA RASHIDIAN, PROJECT ENGINEER
194–1749 CCS27 COORDINATE
1834–6309 CCS83 COORDINATE
40821–14–D

CONTRACTOR
INSPECTOR
DATE STARTED
DATE COMPLETED

CONSTRUCTION CHANGE / ADDENDUM			
CHANGE	DATE	AFFECTED OR ADDED SHEET NUMBERS	APPROVAL NO.

WARNING
0 1
IF THIS BAR DOES NOT MEASURE 1" THEN DRAWING IS NOT TO SCALE.

The City of SAN DIEGO — Engineering & Capital Projects

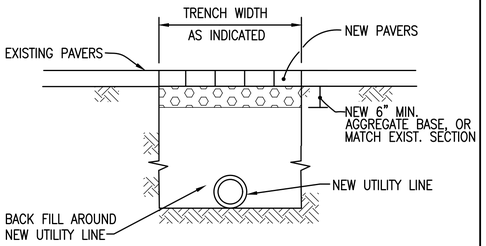

NOTE:

1. CONTRACTOR TO REMOVE EXISTING PAVERS AND REPLACE WITH NEW PAVERS
2. CONTRACTOR TO USE THE SAME PATTERN AND MATCH EXISTING SECTION FOR NEW PAVERS.

1 / C-12 PAVER REPAIR

NO SCALE

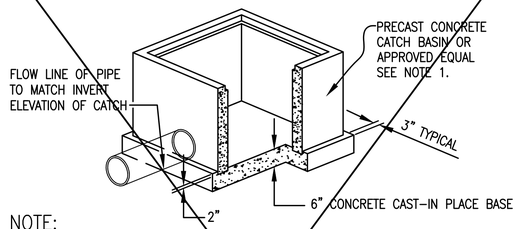

NOTE:

1. ADD EXTENSIONS AS REQUIRED TO OBTAIN ELEVATIONS SHOWN ON PLANS. USE WHERE INVERT ELEVATION IS LESS THAN 3' BELOW GRATE ELEVATION.

2 / C-12 ALTERNATE BOX/PIPE CONFIGURATION

NO SCALE

NOT USED

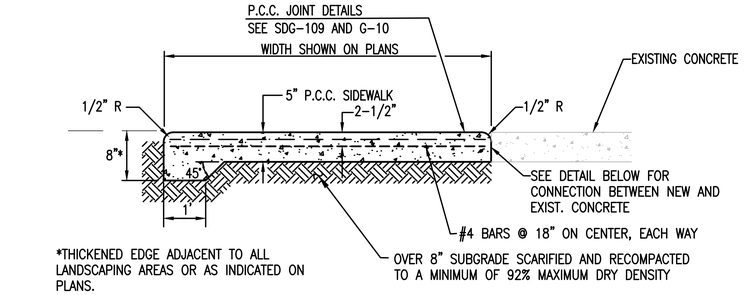

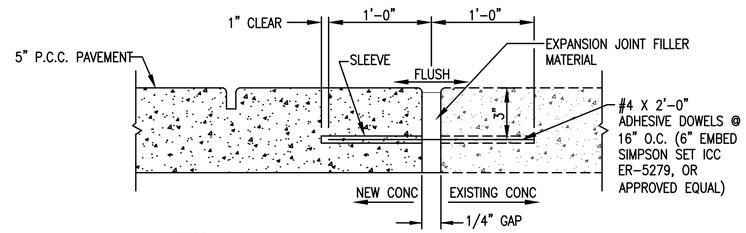

NOTE:
APPLY TWO COATS OF PROTECTIVE EPOXY COATING TO ALL EXPOSED REINFORCING STEEL AT EXISTING CONCRETE TO REMAIN

NEW CONC./EXIST. CONC PAVEMENT EXPANSION JOINT

3 / C-12 5" P.C.C. CONCRETE

NO SCALE

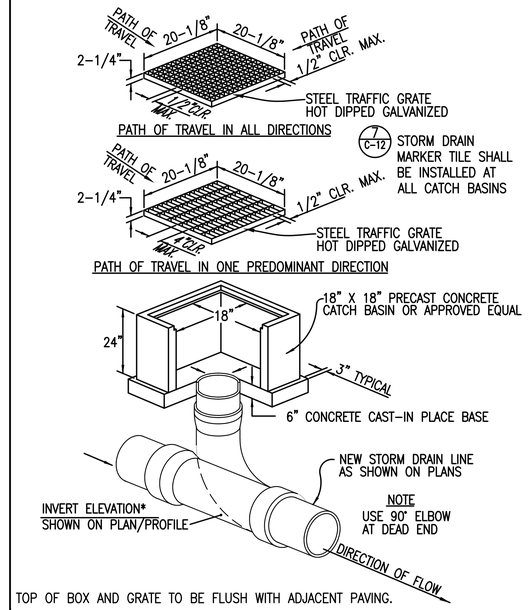

TOP OF BOX AND GRATE TO BE FLUSH WITH ADJACENT PAVING.

4 / C-12 18" X 18" CATCH BASIN

NO SCALE

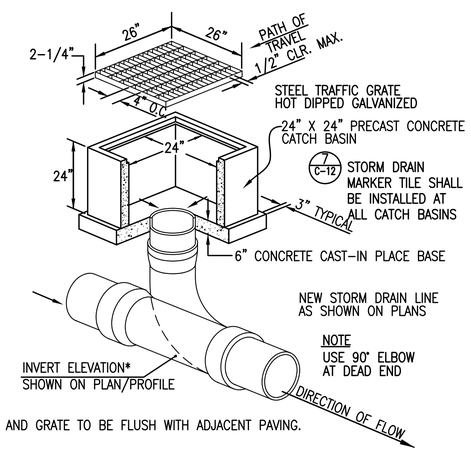

TOP OF BOX AND GRATE TO BE FLUSH WITH ADJACENT PAVING.

5 / C-12 24" x 24" CATCH BASIN

NO SCALE

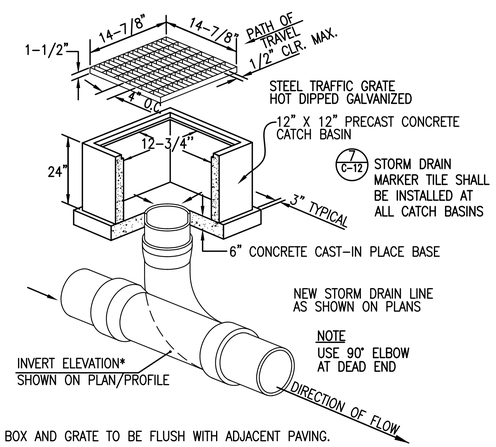

TOP OF BOX AND GRATE TO BE FLUSH WITH ADJACENT PAVING.

6 / C-12 12" x 12" CATCH BASIN

NO SCALE

NOTES:

1. 4"x4" TILE BY CLAY WORKS, 1209 E SIXTH ST, AUSTIN, TEXAS 78702. (512) 474-9551 OR APPROVED EQUAL.
2. INSTALL TILE FLUSH WITH SURROUNDING HARDSCAPE.
3. INSTALL TILE AT ALL NEW STORM DRAIN CATCH BASINS, AREA DRAINS, AND CURB INLETS.

7 / C-12 TYPICAL STORM DRAIN MARKER TILE

NO SCALE

NOTE:

ALL DETAILS ARE PRIVATELY MAINTAINED

C-12

AS-BUILT INFORMATION	
MATERIALS	MANUFACTURER
–	–
–	–
–	–
–	–

CONSULTANT

PLANS FOR THE CONSTRUCTION OF
MLK Recreation Center Moisture Intrusion

CIVIL DETAILS

SPEC. NO. 1945

CITY OF SAN DIEGO, CALIFORNIA
ENGINEERING & CAPITAL PROJECTS DEPARTMENT
SHEET 15 OF 33 SHEETS

WBS B 19001

CONSTRUCTION CHANGE / ADDENDUM

CHANGE	DATE	AFFECTED OR ADDED SHEET NUMBERS	APPROVAL NO.

WARNING

0 1

IF THIS BAR DOES NOT MEASURE 1" THEN DRAWING IS NOT TO SCALE.

The City of SAN DIEGO Engineering & Capital Projects

ENGINEER OF WORK:
BDS Engineering, Inc.
Civil Engineering
Land Surveying
5575 Lake Park Way, Suite 114
La Mesa, California 91942
(619) 582-4992 FAX (619) 582-7428
THOMAS A. JONES R.C.E. 34867

07-29-2021 DATE

18-22 JOB NO.

REGISTERED PROFESSIONAL ENGINEER THOMAS A. JONES 34867 EXP. 9-30-23 CIVIL STATE OF CALIFORNIA 07-29-2021

APPROVED:
FOR CITY ENGINEER
ELIZABETH SCHROTH-NICHOLS
DEPUTY CITY ENGINEER
DATE
C-80228
RCE#

DESCRIPTION	BY	APPROVED	DATE	FILMED
ORIGINAL	BDS			

CONTRACTOR
INSPECTOR
DATE STARTED
DATE COMPLETED

SUBMITTED BY:
DELFA GENOVA
PROJECT MANAGER
CHECKED BY:
REZA RASHIDIAN
PROJECT ENGINEER

194-1749
CCS27 COORDINATE

1834-6309
CCS83 COORDINATE

40821-15-D

MLK Recreation Center Moisture Intrusion

SITE DESIGN AND SOURCE CONTROL BMP OPERATION AND MAINTENANCE PROCEDURE

STORM WATER MANAGEMENT AND DISCHARGE CONTROL MAINTENANCE AGREEMENT APPROVAL NO.: N/A

O&M RESPONSIBLE PARTY DESIGNEE: PROPERTY OWNER / HOA / CITY / OTHER: CITY OF SAN DIEGO PARKS AND REC DEPARTMENT

BMP DESCRIPTION	INSPECTION FREQUENCY	MAINTENANCE FREQUENCY	MAINTENANCE METHOD	QUANTITY	SHEET NUMBER(S)
SITE DESIGN ELEMENTS					
DESCRIPTION: MAINTAIN NATURAL DRAINAGE PATHWAYS AND HYDROLOGIC FEATURES	N/A	N/A		N/A	C-13
DESCRIPTION: MINIMIZE SOIL COMPACTION	N/A	N/A		N/A	C-13
SOURCE CONTROL ELEMENTS					
DESCRIPTION: STORM DRAIN STENCILING OR SIGNAGE	2 YEARS	AS NEEDED	MAINTAIN AND PERIODICALLY REPAINT OR REPLACE INLET MARKINGS	10	C-11, C-13
DESCRIPTION: PLAZAS, SIDEWALKS, AND PARKING LOTS	QUARTERLY	MONTHLY	REGULARLY SWEEP TO PREVENT ACCUMULATION OF LITTER AND DEBRIS. DEBRIS FROM PRESSURE WASHER TO BE COLLECTED AND NOT WASHED DOWN STORM DRAIN.	N/A	C-13

SOURCE CONTROL BMP CHECKLIST FOR STANDARD PROJECTS — FORM I-4A

ALL DEVELOPMENT PROJECTS MUST IMPLEMENT SOURCE CONTROL BMP'S. REFER TO CHAPTER 4 AND APPENDIX E OF THE BMP DESIGN MANUAL FOR INFORMATION TO IMPLEMENT BMPS SHOWN IN THIS CHECKLIST

NOTE: ALL SELECTED BMPS MUST BE SHOWN ON THE CONSTRUCTION PLANS

SOURCE CONTROL REQUIREMENT	APPLIED?		
4.2.1 PREVENTION OF ILLICIT DISCHARGES INTO THE MS4	☒ YES	☐ NO	☐ N/A
4.2.2 STORM DRAIN STENCILING OR SIGNAGE	☒ YES	☐ NO	☐ N/A
4.2.3 PROTECT OUTDOOR MATERIALS STORAGE AREAS FROM RAINFALL, RUN-ON, RUNOFF, AND WIND DISPERSAL	☒ YES	☐ NO	☐ N/A
4.2.4 PROTECT MATERIALS STORED IN OUTDOOR WORK AREAS FROM RAINFALL, RUN-ON, RUNOFF, AND WIND DISPERSAL	☒ YES	☐ NO	☐ N/A
4.2.5 PROTECT TRASH STORAGE AREAS FROM RAINFALL, RUN-ON, RUNOFF, AND WIND DISPERSAL	☐ YES	☐ NO	☒ N/A
4.2.6 BMPS BASED ON POTENTIAL SOURCES OF RUNOFF POLLUTANTS			
ON-SITE STORM DRAIN INLETS	☒ YES	☐ NO	☐ N/A
INTERIOR FLOOR DRAINS AND ELEVATOR SHAFT SUMP PUMPS	☐ YES	☐ NO	☒ N/A
INTERIOR PARKING GARAGES	☐ YES	☐ NO	☒ N/A
NEED FOR FUTURE INDOOR & STRUCTURAL PEST CONTROL	☐ YES	☐ NO	☒ N/A
LANDSCAPE/OUTDOOR PESTICIDE USE	☐ YES	☐ NO	☒ N/A
POOLS, SPAS, PONDS, DECORATIVE FOUNTAINS, AND OTHER WATER FEATURES	☐ YES	☐ NO	☒ N/A
FOOD SERVICE	☐ YES	☐ NO	☒ N/A
REFUSE AREAS	☐ YES	☐ NO	☒ N/A
INDUSTRIAL PROCESSES	☐ YES	☐ NO	☒ N/A
OUTDOOR STORAGE OF EQUIPMENT OR MATERIALS	☐ YES	☐ NO	☒ N/A
VEHICLE/EQUIPMENT REPAIR AND MAINTENANCE	☐ YES	☐ NO	☒ N/A
FUEL DISPENSING AREA	☐ YES	☐ NO	☒ N/A
LOADING DOCKS	☐ YES	☐ NO	☒ N/A
FIRE SPRINKLER TEST WATER	☐ YES	☐ NO	☒ N/A
MISCELLANEOUS DRAIN OR WASH WATER	☐ YES	☐ NO	☒ N/A
PLAZAS, SIDEWALKS, AND PARKING LOTS	☒ YES	☐ NO	☐ N/A
SC-6A: LARGE TRASH GENERATING FACILITIES	☐ YES	☐ NO	☒ N/A
SC-6B: ANIMAL FACILITIES	☐ YES	☐ NO	☒ N/A
SC-6C: PLANT NURSERIES AND GARDEN CENTERS	☐ YES	☐ NO	☒ N/A
SC-6D:AUTOMOTIVE-RELATED USES	☐ YES	☐ NO	☒ N/A

DISCUSSION / JUSTIFICATION FOR ALL "NO" ANSWERS SHOWN ABOVE:

SITE DESIGN BMP CHECKLIST FOR STANDARD PROJECTS — FORM I-5A

ALL DEVELOPMENT PROJECTS MUST IMPLEMENT SITE DESIGN BMP'S. REFER TO CHAPTER 4 AND APPENDIX E OF THE BMP DESIGN MANUAL FOR INFORMATION TO IMPLEMENT BMPS SHOWN IN THIS CHECKLIST

NOTE: ALL SELECTED BMPS MUST BE SHOWN ON THE CONSTRUCTION PLANS

SITE DESIGN REQUIREMENT	APPLIED?		
4.3.1 MAINTAIN NATURAL DRAINAGE PATHWAYS AND HYDROLOGIC FEATURES	☒ YES	☐ NO	☐ N/A
4.3.2 CONSERVE NATURAL AREAS, SOILS, AND VEGETATION	☒ YES	☐ NO	☐ N/A
4.3.3 MINIMIZE IMPERVIOUS AREA	☐ YES	☐ NO	☒ N/A
4.3.4 MINIMIZE SOIL COMPACTION	☐ YES	☐ NO	☒ N/A
4.3.5 IMPERVIOUS AREA DISPERSION	☐ YES	☐ NO	☒ N/A
4.3.6 RUNOFF COLLECTION	☐ YES	☐ NO	☒ N/A
4.3.7 LANDSCAPING WITH NATIVE OR DROUGHT TOLERANT SPECIES	☐ YES	☐ NO	☒ N/A
4.3.8 HARVESTING AND USING PRECIPITATION	☐ YES	☐ NO	☒ N/A

DISCUSSION / JUSTIFICATION FOR ALL "NO" ANSWERS SHOWN ABOVE:

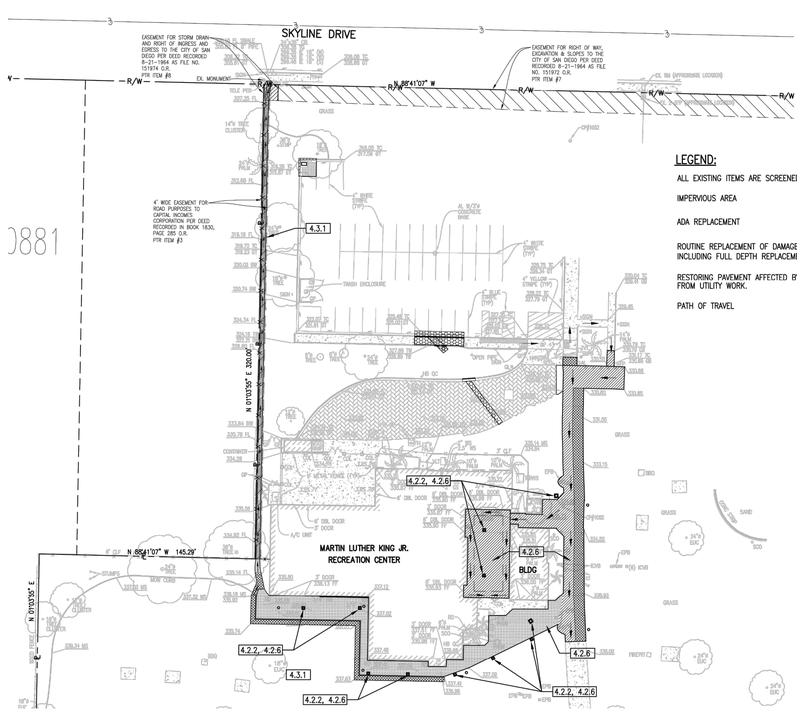

LEGEND:

ALL EXISTING ITEMS ARE SCREENED

IMPERVIOUS AREA	1940 SF
ADA REPLACEMENT	4186 SF
ROUTINE REPLACEMENT OF DAMAGED PAVEMENT, INCLUDING FULL DEPTH REPLACEMENT AND UTILITY WORK.	SOUTH SIDE: 3278 SF BROWDITCH: 1325 SF PARKING AREA NEAR CATCH BASIN: 85 SF
RESTORING PAVEMENT AFFECTED BY TRENCHES FROM UTILITY WORK.	444 SF
PATH OF TRAVEL	

N

SITE MAP

MLK Recreation Center Moisture Intrusion

C-13

AS-BUILT INFORMATION

MATERIALS	MANUFACTURER
–	–
–	–
–	–
–	–

PLANS FOR THE CONSTRUCTION OF
MLK Recreation Center Moisture Intrusion

BMP MAP FOR STANDARD DEVELOPMENT PROJECTS

CONSULTANT

SPEC. NO. 1945

CITY OF SAN DIEGO, CALIFORNIA
ENGINEERING & CAPITAL PROJECTS DEPARTMENT
SHEET 16 OF 33 SHEETS

WBS B 19001

CONSTRUCTION CHANGE / ADDENDUM

CHANGE	DATE	AFFECTED OR ADDED SHEET NUMBERS	APPROVAL NO.

WARNING

0 1

IF THIS BAR DOES NOT MEASURE 1" THEN DRAWING IS NOT TO SCALE.

The City of SAN DIEGO — Engineering & Capital Projects

ENGINEER OF WORK:
BDS Engineering, Inc.
Civil Engineering
Land Surveying
5575 Lake Park Way, Suite 114
La Mesa, California 91942
(619) 582-4992 FAX (619) 582-7428

THOMAS A. JONES R.C.E. 34867 — DATE 07-29-2021 — JOB NO. 18-22

REGISTERED PROFESSIONAL ENGINEER THOMAS A. JONES 34867 EXP. 9-30-23 CIV IL STATE OF CALIFORNIA 07-29-2021

APPROVED:
FOR CITY ENGINEER — DATE
ELIZABETH SCHROTH-NICHOLS — C-80228
DEPUTY CITY ENGINEER — RCE#

DESCRIPTION	BY	APPROVED	DATE	FILMED
ORIGINAL	BDS			

CONTRACTOR — DATE STARTED
INSPECTOR — DATE COMPLETED

SUBMITTED BY: DELFA GENOVA, PROJECT MANAGER
CHECKED BY: REZA RASHIDIAN, PROJECT ENGINEER

194-1749 CCS27 COORDINATE
1834-6309 CCS83 COORDINATE

40821-16-D

NOT USED

C-14

AS-BUILT INFORMATION	
MATERIALS	MANUFACTURER
–	–
–	–
–	–
–	–

PLANS FOR THE CONSTRUCTION OF
MLK Recreation Center Moisture Intrusion

EROSION CONTROL PLAN

CONSULTANT

SPEC. NO. 1945

CITY OF SAN DIEGO, CALIFORNIA
ENGINEERING & CAPITAL PROJECTS DEPARTMENT
SHEET 17 OF 33 SHEETS

WBS B 19001

CONSTRUCTION CHANGE / ADDENDUM			
CHANGE	DATE	AFFECTED OR ADDED SHEET NUMBERS	APPROVAL NO.

WARNING
0 1
IF THIS BAR DOES NOT MEASURE 1" THEN DRAWING IS NOT TO SCALE.

The City of SAN DIEGO Engineering & Capital Projects

ENGINEER OF WORK:
BDS Engineering, Inc.
Civil Engineering
Land Surveying
5575 Lake Park Way, Suite 114
La Mesa, California 91942
(619) 582-4992 FAX (619) 582-7428

THOMAS A. JONES R.C.E. 34867 — DATE 07-29-2021 — JOB NO. 18-22

REGISTERED PROFESSIONAL ENGINEER THOMAS A. JONES 34867 EXP. 9-30-23 CIVIL STATE OF CALIFORNIA 07-29-2021

APPROVED:
FOR CITY ENGINEER — DATE
ELIZABETH SCHROTH-NICHOLS — C-80228
DEPUTY CITY ENGINEER — RCE#

DESCRIPTION	BY	APPROVED	DATE	FILMED
ORIGINAL	BDS			

CONTRACTOR INSPECTOR
DATE STARTED
DATE COMPLETED

SUBMITTED BY:
DELFA GENOVA
PROJECT MANAGER
CHECKED BY:
REZA RASHIDIAN
PROJECT ENGINEER

194-1749
CCS27 COORDINATE

1834-6309
CCS83 COORDINATE

40821-17-D

MLK Recreation Center Moisture Intrusion

NOT USED

C-15

MLK Recreation Center Moisture Intrusion

AS–BUILT INFORMATION	
MATERIALS	MANUFACTURER
–	–
–	–
–	–
–	–

PLANS FOR THE CONSTRUCTION OF
MLK Recreation Center Moisture Intrusion

EROSION CONTROL PLAN

CONSULTANT

SPEC. NO. 1945

CITY OF SAN DIEGO, CALIFORNIA
ENGINEERING & CAPITAL PROJECTS DEPARTMENT
SHEET 18 OF 33 SHEETS

WBS B 19001

CONSTRUCTION CHANGE / ADDENDUM			
CHANGE	DATE	AFFECTED OR ADDED SHEET NUMBERS	APPROVAL NO.

WARNING
0 1
IF THIS BAR DOES NOT MEASURE 1" THEN DRAWING IS NOT TO SCALE.

The City of SAN DIEGO Engineering & Capital Projects

ENGINEER OF WORK:
BDS Engineering, Inc.
Civil Engineering
Land Surveying
5575 Lake Park Way, Suite 114
La Mesa, California 91942
(619) 582-4992 FAX (619) 582-7428

THOMAS A. JONES R.C.E. 34867 — DATE 07-29-2021 — JOB NO. 18-22

REGISTERED PROFESSIONAL ENGINEER THOMAS A. JONES 34867 EXP. 9-30-23 CIVIL STATE OF CALIFORNIA
07-29-2021

APPROVED:
FOR CITY ENGINEER — DATE
ELIZABETH SCHROTH–NICHOLS — C–80228
DEPUTY CITY ENGINEER — RCE#

DESCRIPTION	BY	APPROVED	DATE	FILMED
ORIGINAL	BDS			

CONTRACTOR INSPECTOR
DATE STARTED
DATE COMPLETED

SUBMITTED BY:
DELFA GENOVA
PROJECT MANAGER
CHECKED BY:
REZA RASHIDIAN
PROJECT ENGINEER

194–1749
CCS27 COORDINATE

1834–6309
CCS83 COORDINATE

40821–18–D

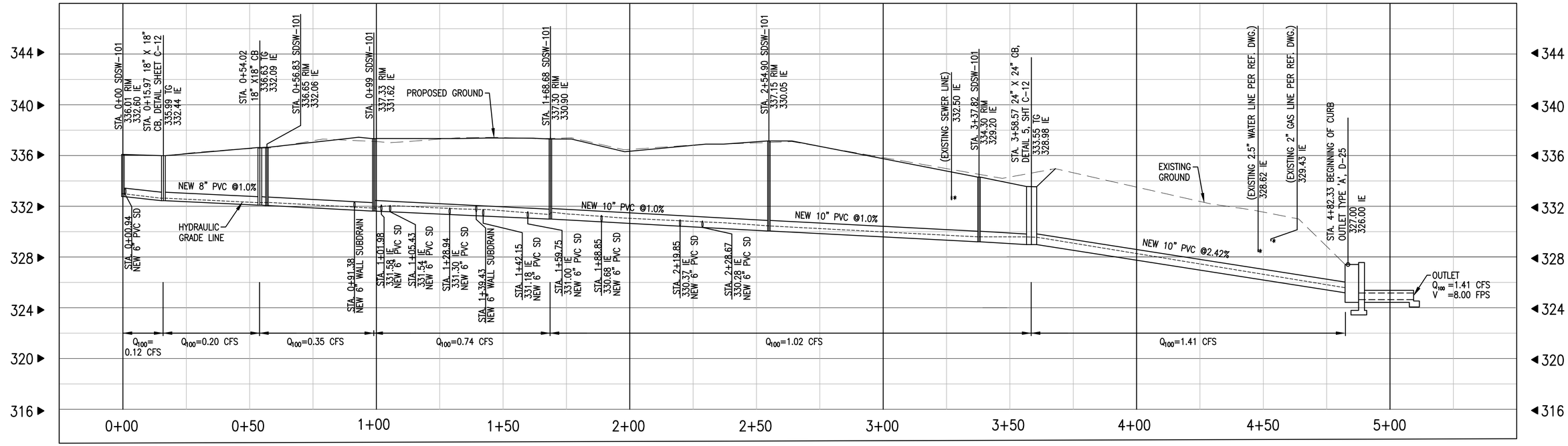

PROFILE: MLK

PROFILE: STORM DRAIN LINE – ALIGNMENT 1

SCALE: HORZ. 1" = 20'
VERT. 1" = 4'

✳ CONTRACTOR TO VERIFY EXACT LOCATION AND DEPTH OF EXISTING UTILITIES PRIOR TO CONSTRUCTION

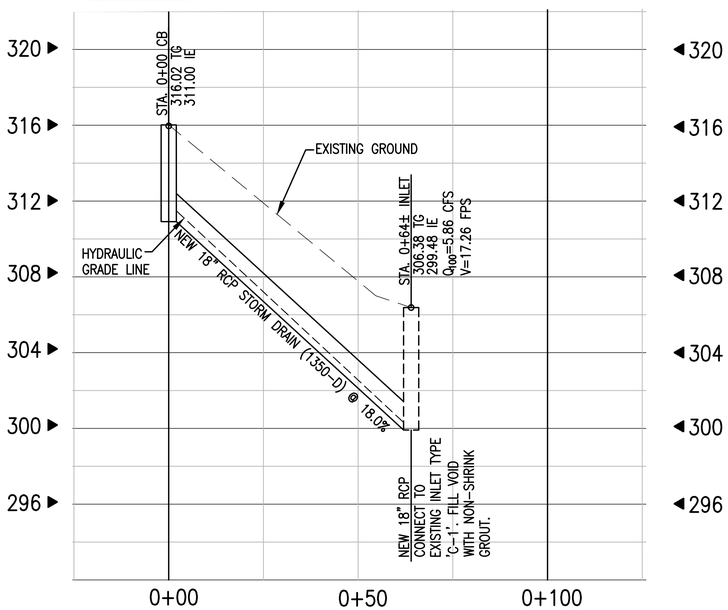

PROFILE: MLK

PROFILE: STORM DRAIN LINE – ALIGNMENT 2

SCALE: HORZ. 1" = 20'
VERT. 1" = 4'

IF SHEET IS LESS THAN 22" BY 34" IT IS A REDUCED PRINT-SCALE REDUCE ACCORDINGLY

GRAPHIC SCALE

0 5' 10' 20' 40' 60'

SCALE: 1" = 20'

GRAPHIC SCALE

0 2' 4' 8' 12'

SCALE: 1" = 4'

C-16

AS-BUILT INFORMATION	
MATERIALS	MANUFACTURER
–	–
–	–
–	–
–	–

CONSULTANT

SPEC. NO. 1945

PLANS FOR THE CONSTRUCTION OF
MLK Recreation Center Moisture Intrusion

STORM DRAIN PROFILE LINE

CITY OF SAN DIEGO, CALIFORNIA
ENGINEERING & CAPITAL PROJECTS DEPARTMENT
SHEET 19 OF 33 SHEETS

WBS B 19001

APPROVED:
FOR CITY ENGINEER
ELIZABETH SCHROTH-NICHOLS
DEPUTY CITY ENGINEER
DATE
C-80228
RCE#

SUBMITTED BY:
DELFA GENOVA
PROJECT MANAGER

CHECKED BY:
REZA RASHIDIAN
PROJECT ENGINEER

DESCRIPTION	BY	APPROVED	DATE	FILMED
ORIGINAL	BDS			

194-1749
CCS27 COORDINATE

1834-6309
CCS83 COORDINATE

40821-19-D

CONTRACTOR
INSPECTOR
DATE STARTED
DATE COMPLETED

CONSTRUCTION CHANGE / ADDENDUM			
CHANGE	DATE	AFFECTED OR ADDED SHEET NUMBERS	APPROVAL NO.

WARNING
0 1
IF THIS BAR DOES NOT MEASURE 1" THEN DRAWING IS NOT TO SCALE.

The City of SAN DIEGO
Engineering & Capital Projects

ENGINEER OF WORK:
BDS Engineering, Inc.
Civil Engineering
Land Surveying
5575 Lake Park Way, Suite 114
La Mesa, California 91942
(619) 582-4992 FAX (619) 582-7428

THOMAS A. JONES R.C.E. 34867
07-29-2021
DATE
18-22
JOB NO.

REGISTERED PROFESSIONAL ENGINEER THOMAS A. JONES 34867 EXP. 9-30-23 CIVIL STATE OF CALIFORNIA
07-29-2021

MLK Recreation Center Moisture Intrusion

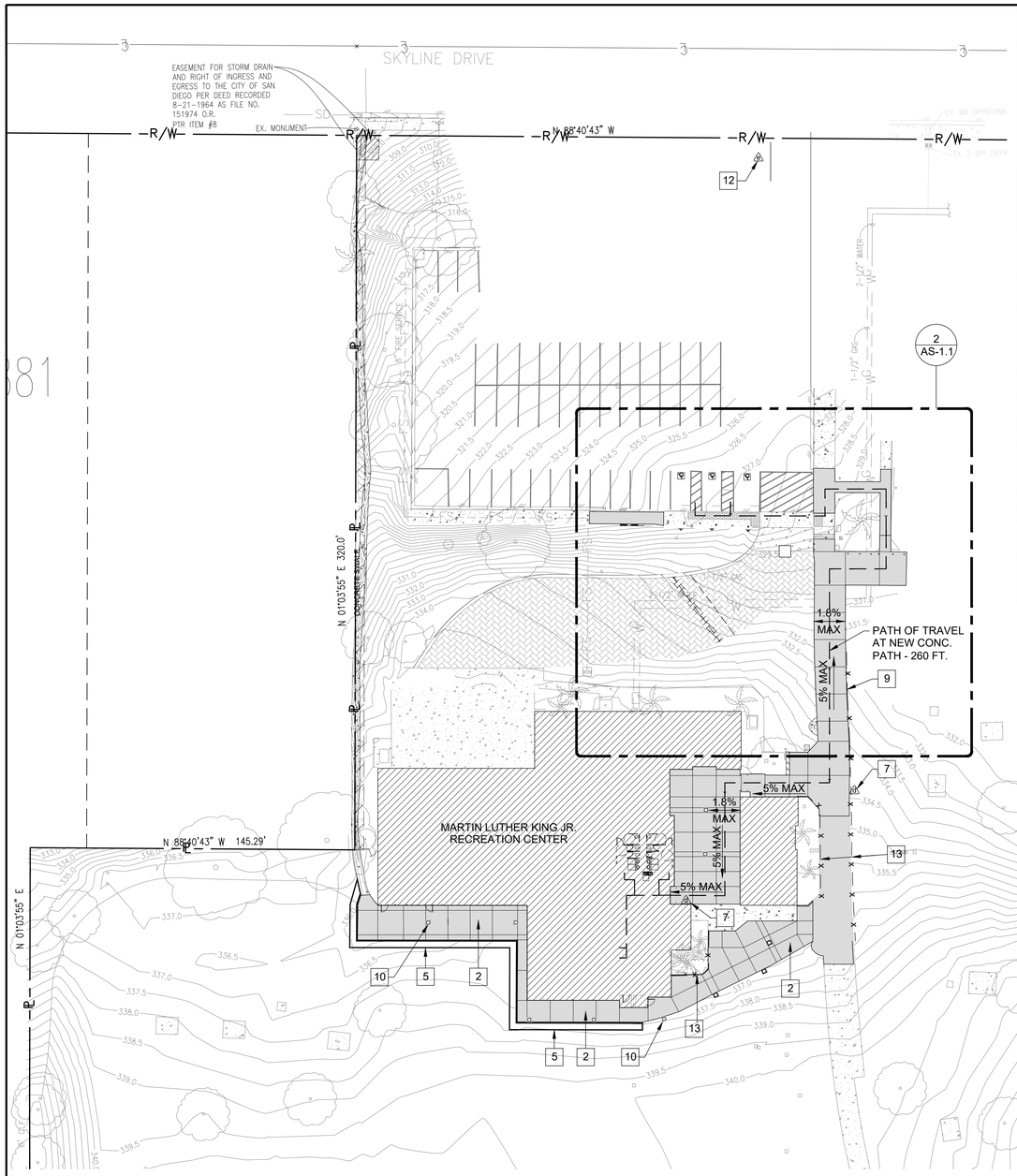

1 NEW SITE PLAN
1" = 20'

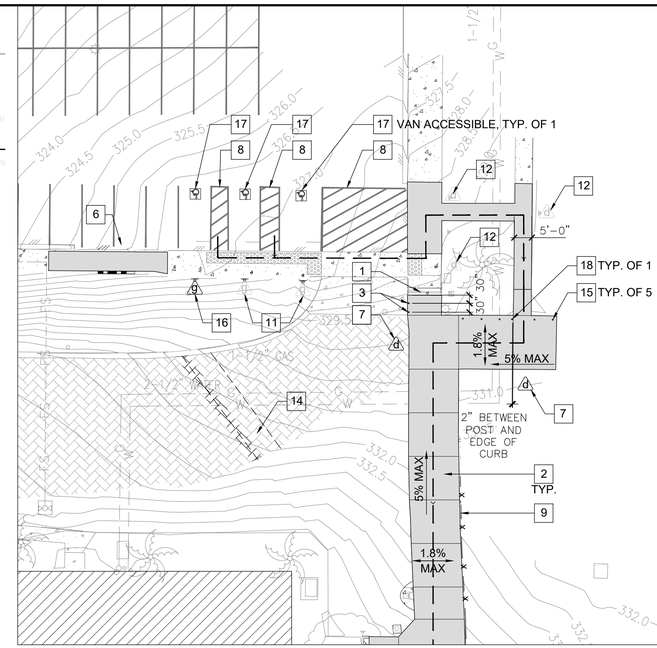

2 NEW AREA PLAN
1" = 20'

NORTH
0' 20' 40' 60'

GENERAL NOTES

1. ALL SITE IMPROVEMENTS SHOWN ARE EXISTING UNLESS NOTED AS NEW.
2. WHERE NEW PAVEMENT MEET EXISTING PAVEMENT, NEW PAVEMENT SHALL BE CONSTRUCTED FLUSH WITH EXISTING.
3. IF THE CITY BUILDING INSPECTOR DETERMINES NON-COMPLIANCE WITH ANY ACCESSIBILITY PROVISIONS, A COMPLETE AND DETAILED REVISED PLANS CLEARLY SHOWING ALL EXISTING NON-COMPLYING CONDITIONS AND THE PROPOSED MODIFICATIONS TO MEET CURRENT ACCESSIBILITY REQUIREMENTS (INCLUDING SITE PLAN, FLOOR PLANS, DETAILS, ETC.) WILL BE SUBMITTED TO THE DEPARTMENT FOR REVIEW AND APPROVAL.
4. PAINT ALL NEW SERVICES THAT ARE NOT FACTORY FINISH TO MATCH EXISTING COLORS.
5. RELOCATED BOLLARD IS ONLY DECORATIVE AND SHALL BE INSTALLED PER 'TYPE-A' PER CSD WM-04.
6. CONTRACTOR SHALL ENGAGE A ROOF INSPECTOR TO INSPECT REQUIRED ROOF REPAIR & PROVIDE INSPECTION REPORT TO THE OWNER.

LEGEND

NEW CONC. PAVING.

ACCESSIBLE PATH OF TRAVEL NOT TO EXCEED 5% SLOPE; 1.8% MAX CROSS SLOPE

PARKING SPACES PER TABLE 11B-208.2

1 VAN ACCESSIBLE SPACE
2 ACCESSIBLE PARKING SPACES
50 STANDARD SPACES
53 TOTAL PARKING SPACES

PER TABLE 11B-208.2: 3 ACCESSIBLE SPACES REQUIRED FOR 51-75 TOTAL SPACES. = OK.

KEYNOTES

1. NEW STRIPING AT EXISTING STAIRS. APPLY PAINTED STRIPING TO ALL TREADS PER SDM-118.
2. NEW CONCRETE PAVING WITH CONTROL JOINTS AT 12' O.C. MAX, U.N.O, SEE CIVIL.
3. NEW BOLLARD, TYP. OF 2, PER CSD WM-04, INSTALLED IN LINE WITH EXISTING HANDRAIL.
4. NOT USED
5. NEW CONCRETE GRAVITY WALL & CURB/GUTTER, SEE CIVIL FOR ADDITIONAL INFORMATION.
6. NEW CURB OUTLET
7. NEW ACCESSIBLE DIRECTIONAL SIGNAGE. SEE DETAIL15 ON SHEET AD-3.0 TYPE d
8. RE-STRIPE EXISTING ACCESSIBLE PARKING STRIPING PER CSD SDM-117.
9. EXISTING CHAIN LINK FENCE - PROTECT IN PLACE
10. NEW CATCH BASIN W/ ACCESS COMPLIANT GRATING, TYP.
11. EXISTING ACCESSIBLE PARKING SIGN, PROTECT IN PLACE.
12. EXISTING ACCESSIBLE DIRECTION SIGNAGE.
13. NEW 4' HIGH CHAIN LINK FENCE PER SDM-112.
14. REINSTALL EXISTING PAVERS.
15. EXISTING BOLLARD - PROTECT IN PLACE
16. NEW ACCESSIBLE PARKING PARKING SIGN PER CSD SDM-117, SHEET 6 OF 9.
17. EXISTING DOUBLE ACCESSIBLE PARKING STALL PER CSD SDM-117 SHEET 4 OF 9
18. RELOCATE EXISTING BOLLARD, TYP. OF 1, PER CSD WM-04

AS-1.1

MLK Recreation Center Moisture Intrusion

AS-BUILT INFORMATION

MATERIALS	MANUFACTURER
–	–
–	–
–	–
–	–

PLANS FOR THE CONSTRUCTION OF
MLK Recreation Center Moisture Intrusion

NEW SITE PLAN

CONSULTANT

SPEC. NO. 1945

CITY OF SAN DIEGO, CALIFORNIA
ENGINEERING & CAPITAL PROJECTS DEPARTMENT
SHEET 20 OF 33 SHEETS

WBS B 19001

CONSTRUCTION CHANGE / ADDENDUM

CHANGE	DATE	AFFECTED OR ADDED SHEET NUMBERS	APPROVAL NO.

WARNING
0 1
IF THIS BAR DOES NOT MEASURE 1" THEN DRAWING IS NOT TO SCALE.

The City of SAN DIEGO Engineering & Capital Projects

ROESLING NAKAMURA TERADA ARCHITECTS INC
363 Fifth Avenue
San Diego, California 92101
P619.233.1023
www.nntarchitects.com

LICENSED ARCHITECT RALPH J. ROESLING NO. C 10982 REN. 2-29-23 STATE OF CALIFORNIA
07-29-2021

APPROVED:
FOR CITY ENGINEER
ELIZABETH SCHROTH-NICHOLS
DEPUTY CITY ENGINEER
DATE
C-80228
RCE#

DESCRIPTION	BY	APPROVED	DATE	FILMED
ORIGINAL	RNT			

CONTRACTOR
INSPECTOR
DATE STARTED
DATE COMPLETED

SUBMITTED BY: DELFA GENOVA PROJECT MANAGER
CHECKED BY: REZA RASHIDIAN PROJECT ENGINEER
194-1749 CCS27 COORDINATE
1834-6309 CCS83 COORDINATE
40821-20-D

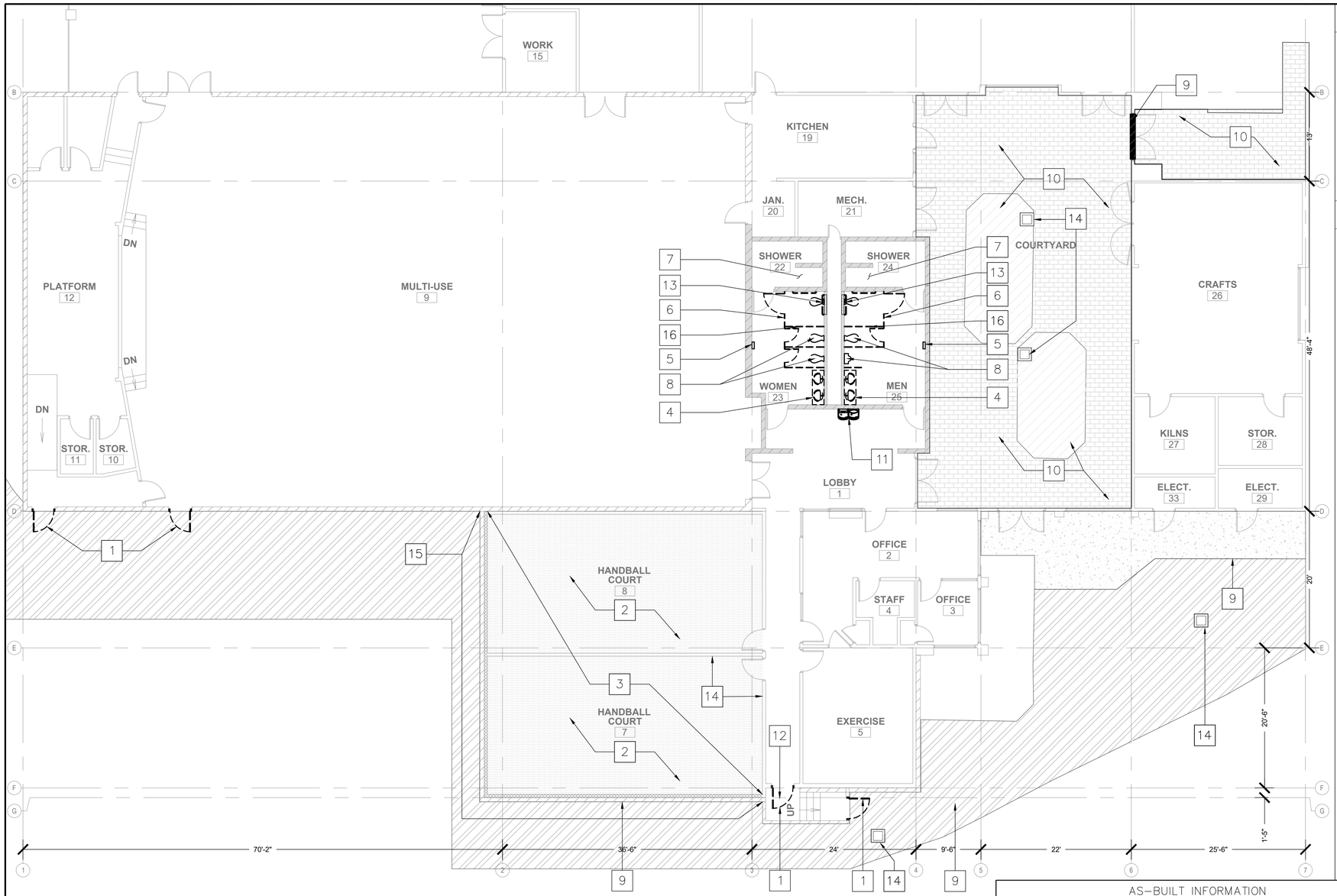

GENERAL NOTES

1. ALL BUILDING ELEMENTS SHOWN ARE EXISTING UNLESS NOTED AS NEW.
2. PROTECT IN PLACE ALL BUILDING ELEMENTS FROM DAMAGE DURING CONSTRUCTION. ITEMS DAMAGED DURING CONSTRUCTION SHALL BE REPAIRED TO THE SATISFACTION OF THE CITY OR SHALL BE REPLACED WITH NEW BY THE CONTRACTOR WITHOUT COST TO THE CITY
3. ITEMS INDICATED TO BE RELOCATED OR TO BE REMOVED AND REINSTALLED SHALL BE CAREFULLY REMOVED, PROTECTED FROM DAMAGE, CLEANED, PRIOR TO REINSTALLATION. ITEMS DAMAGED SHALL BE REPLACED WITH NEW BY CONTRACTOR WITHOUT COST TO THE CITY.
4. EXISTING LOBBY & CORRIDOR WALLS ARE 1 HOUR RATED.
5. REPAIR WATER DAMAGE TO CEILING AND MATCH EXISTING ORIGINAL CONDITION.

DEMOLITION KEYNOTES

1. REMOVE EXISTING DOOR AND DOOR HARDWARE. REPAIR DOOR FRAME, CLEAN & REPAIR WITH GALVANIZING REPAIR PAINT. PREP FRAME FOR NEW DOOR.
2. REMOVE EXISTING WATER DAMAGED RESINOUS SPORTS FLOORING AND PREPARE SLAB FOR NEW RESINOUS SPORTS FLOORING AS REQUIRED BY FLOORING MFR.
3. SEE SHEETS S2 & S3 FOR REMOVAL OF EXIST. DAMAGED STUDS & SILL PLATES.
4. REMOVE EXISTING CASEWORK, HARDWARE AND FIXTURES. PROTECT ALL PLUMBING PIPES WITHIN WALL FOR CONNECTION TO NEW FIXTURE.
5. REMOVE EXISTING HAND DRYER. PROTECT EXISTING WIRING AND ELECTRICAL JUNCTION BOX IN PLACE FOR CONNECTION TO NEW HAND DRYER.
6. REMOVE ALL EXISTING TOILET PARTITIONS, PARTITION DOORS, PARTITION HARDWARE, AND TOILET ACCESSORIES INSIDE RESTROOM STALLS.
7. REMOVE AND CAP ALL EXISTING SHOWER FIXTURES WITHIN SHOWER ROOM FOR CONVERSION TO STORAGE.
8. EXISTING PLUMBING FIXTURES TO REMAIN. PROTECT AND CLEAN IN PLACE.
9. SAW CUT CONCRETE AT JUNCTION WITH EXISTING CONCRETE HARDSCAPE TO PROVIDE CLEAN STRAIGHT EDGE. DEMOLISH AND REMOVE EXISTING CONCRETE WITHIN HATCHED AREA.
10. REMOVE EXISTING PAVERS AND CONCRETE PAVING AT MAIN ENTRANCE AND COURTYARD. SEE CIVIL DRAWINGS.
11. PROTECT DRINKING FOUNTAIN IN PLACE. REMOVE AND REINSTALL EXISTING BOTTLE FILLER STATION TO COMPLIANT HEIGHT AT LOWER FOUNTAIN LOCATION.
12. NOT USED
13. REMOVE EXIST. WALL MOUNTED TOILET & CARRIER FOR NEW CARRIER INSTALLATION.
14. REMOVE EXISTING CATCH BASIN PER CIVIL PLANS
15. REMOVE EXISTING EXTERIOR CEMENT PLASTER (STUCCO) REMOVE & STORE ALL WALL MOUNTED LIGHT FIXTURES, LOUVERS, CONDUITS AND APPLICABLE COMPONENTS FOR REINSTALLATION.
16. REMOVE AND STORE EXISTING TOILET & BATH ACCESSORIES MOUNTED ON EXISTING TOILET PARTITIONS FOR REINSTALLATION ON NEW TOILET PARTITION

A - 1.1

MLK Recreation Center Moisture Intrusion

1 EXISTING-DEMOLITION FLOOR PLAN
1/8" = 1' - 0"

NORTH
0' 8' 16' 24'
GRAPHIC SCALE: 1/8" = 1' - 0"

LEGEND

- WATER DAMAGED RESINOUS SPORTS FLOORING PER KEYNOTE 2
- DAMAGED STUDS AND SILL PLATES PER KEYNOTE 3
- SAW CUT CONCRETE AT JUNCTION PER KEYNOTE 9

AS-BUILT INFORMATION

MATERIALS	MANUFACTURER
–	–
–	–
–	–
–	–

PLANS FOR THE CONSTRUCTION OF
MLK Recreation Center Moisture Intrusion

EXISTING-DEMOLITION FLOOR PLAN

CONSULTANT

SPEC. NO. 1945

CITY OF SAN DIEGO, CALIFORNIA
ENGINEERING & CAPITAL PROJECTS DEPARTMENT
SHEET 21 OF 33 SHEETS

WBS B 19001

CONSTRUCTION CHANGE / ADDENDUM

CHANGE	DATE	AFFECTED OR ADDED SHEET NUMBERS	APPROVAL NO.

WARNING
0 1
IF THIS BAR DOES NOT MEASURE 1" THEN DRAWING IS NOT TO SCALE.

The City of SAN DIEGO Engineering & Capital Projects

ROESLING NAKAMURA TERADA ARCHITECTS INC
363 Fifth Avenue
San Diego, California 92101
P619.233.1023
www.rntarchitects.com

LICENSED ARCHITECT RALPH J. ROESLING No. C 12067 REN. 2-28-23 STATE OF CALIFORNIA
07-29-2021

APPROVED:
FOR CITY ENGINEER — DATE
ELIZABETH SCHROTH-NICHOLS — C-80228
DEPUTY CITY ENGINEER — RCE#

DESCRIPTION	BY	APPROVED	DATE	FILMED
ORIGINAL	RNT			

CONTRACTOR — DATE STARTED
INSPECTOR — DATE COMPLETED

SUBMITTED BY: DELFA GENOVA, PROJECT MANAGER
CHECKED BY: REZA RASHIDIAN, PROJECT ENGINEER
194-1749 CCS27 COORDINATE
1834-6309 CCS83 COORDINATE
40821-21-D

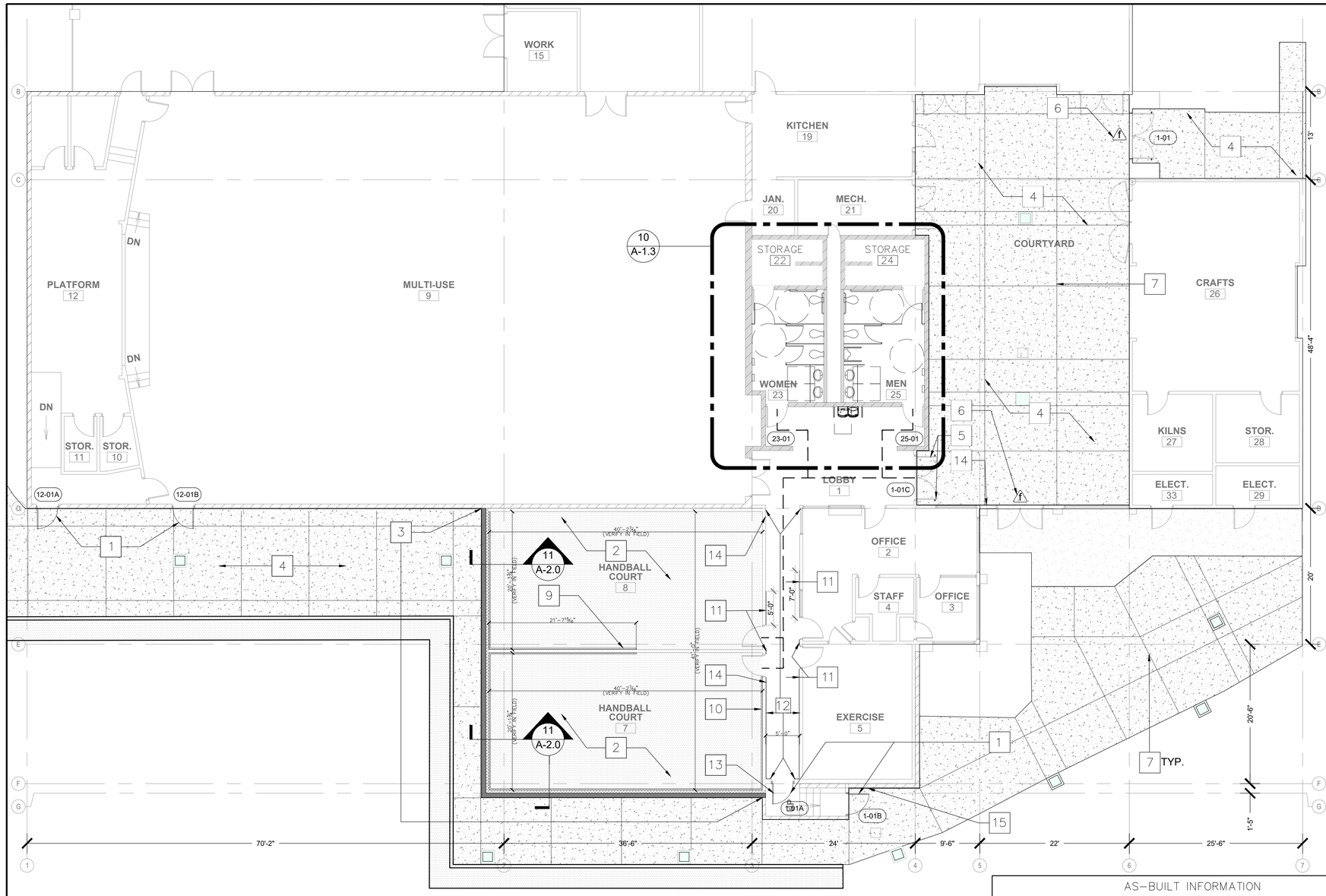

GENERAL NOTES

1. ALL BUILDING ELEMENTS SHOWN ARE EXISTING UNLESS NOTED AS NEW.
2. ALL NEW FINISHES SHALL BE ALIGNED WITH AND INSTALLED FLUSH WITH EXISTING FINISHES UNLESS SHOWN OTHERWISE.
3. PAINT ENTIRE REQUETBALL COURT WALLS, CEILINGS, AND DOORS.
4. PATCH AND REPAINT ALL THE WALLS, ENTIRELY, IN THE RESTROOMS - MEN'S AND WOMEN'S.
5. IN AREAS WHERE SHEATHING IS REMOVED AND TERMITE DAMAGE AND/OR DRY ROT ARE UNCOVERED, REPLACE IN KIND.
6. IN AREAS WHERE SHEATHING IS REMOVED AND MOLD IS UNCOVERED, CONTRACTOR SHALL ENGAGE CERTIFIED ABATEMENT CONTRACTOR TO REMOVE MOLD.
7. REPAIR WATER DAMAGE TO CEILING AND MATCH EXISTING ORIGINAL CONDITION.

FLOOR PLAN KEYNOTES

1. NEW DOOR AND DOOR HARDWARE PER SCHEDULE
2. PREP CONCRETE FLOOR INSIDE HANDBALL COURTS AND INSTALL NEW POLYURETHANE SPORTS FLOOR BY ALLIED PRODUCTS, LLC. (OR APPROVED EQUAL) PER MANUFACTURER SPECS.
3. EXTENT OF WALL REHABILITATION SHOWN HATCHED, SEE 11/A-2.0
4. NEW CONCRETE PAVING AT COURTYARD AND MAIN ENTRANCE. SEE CIVIL DRAWINGS FOR ADDITIONAL INFORMATION.
5. NEW FLOOR STOPS @ EXISTING DOORS
6. NEW SIGN AT MAIN ENTRANCE GATES & SIDE GATE PER 1 ON AD-3.0
7. NEW CONTROL JOINTS PER SITE PLAN. SEE ALSO CIVIL DRAWINGS.
8. NOT USED.
9. REPAIR INTERIOR WALL FINISH. SEE DETAIL 8/AD-1.0, PAINT TO MATCH EXISTING.
10. REPAIR INTERIOR WALL FINISH. SEE DETAIL 8/AD-1.0, NOTE 1 FOR CORRIDOR FINISH, PAINT TO MATCH EXISTING.
11. PROVIDE NEW 5/8" TYPE "X" GYP. BD. WHERE EXIST. WALL PANELS HAVE BEEN REMOVED, PAINT TO MATCH EXISTING.
12. PAINT ENTIRE CORRIDOR WALLS TO MATCH EXISTING
13. NEW 'NOT ACCESSIBLE EXIT' SIGN PER 1 ON AD-3.0
14. NEW DIRECTIONAL SIGN PER 4 ON AD-3.0
15. NEW 'NOT ACCESSIBLE ENTRANCE' SIGN PER 1 ON AD-3.0

MLK Recreation Center Moisture Intrusion

A - 1.2

1 NEW FLOOR PLAN
1/8" = 1' - 0"

NORTH

0' 8' 16' 24'
GRAPHIC SCALE: 1/8" = 1' - 0"

LEGEND

- NEW SPORTS FLOORING PER KEYNOTE 2
- NEW STUDS AND SILL PLATES PER DETAIL 11/A-2.0
- EXTERIOR WALL REHABILITATION PER KEYNOTE 3

AS-BUILT INFORMATION

MATERIALS	MANUFACTURER
–	–
–	–
–	–
–	–

PLANS FOR THE CONSTRUCTION OF
MLK Recreation Center Moisture Intrusion

NEW FLOOR PLAN

CONSULTANT

SPEC. NO. 1945

CITY OF SAN DIEGO, CALIFORNIA
ENGINEERING & CAPITAL PROJECTS DEPARTMENT
SHEET 22 OF 33 SHEETS

WBS B 19001

CONSTRUCTION CHANGE / ADDENDUM

CHANGE	DATE	AFFECTED OR ADDED SHEET NUMBERS	APPROVAL NO.

WARNING
0 1
IF THIS BAR DOES NOT MEASURE 1" THEN DRAWING IS NOT TO SCALE.

The City of SAN DIEGO Engineering & Capital Projects

ROESLING NAKAMURA TERADA ARCHITECTS INC
363 Fifth Avenue
San Diego, California 92101
P619.233.1023
www.nrtarchitects.com

LICENSED ARCHITECT RALPH J. ROESLING NO. C 10287 REN. 2-29-23 STATE OF CALIFORNIA
07-29-2021

APPROVED:
FOR CITY ENGINEER — DATE
ELIZABETH SCHROTH-NICHOLS — C-80228
DEPUTY CITY ENGINEER — RCE#

DESCRIPTION	BY	APPROVED	DATE	FILMED
ORIGINAL	RNT			

SUBMITTED BY: DELFA GENOVA, PROJECT MANAGER
CHECKED BY: REZA RASHIDIAN, PROJECT ENGINEER

194-1749 CCS27 COORDINATE
1834-6309 CCS83 COORDINATE

CONTRACTOR — DATE STARTED
INSPECTOR — DATE COMPLETED

40821-22-D

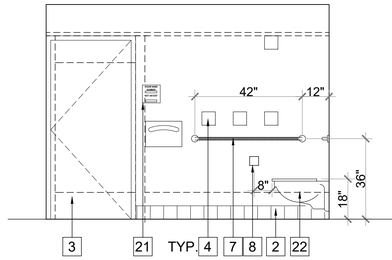

1 NORTH WOMEN
3/8" = 1' - 0"

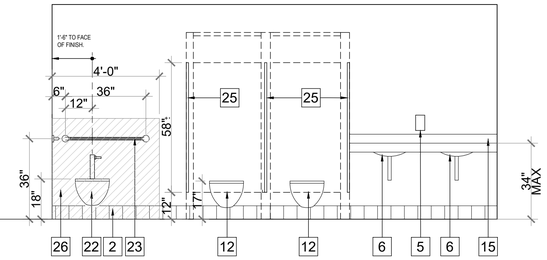

2 EAST WOMEN
3/8" = 1' - 0"

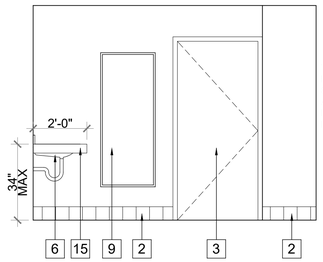

3 SOUTH WOMEN
3/8" = 1' - 0"

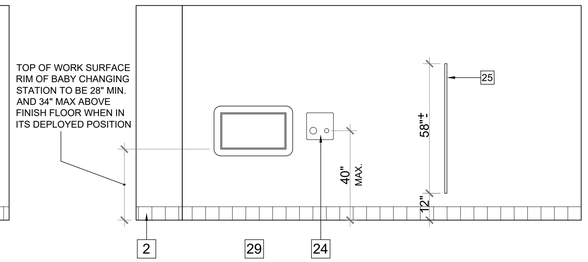

4 WEST WOMEN
3/8" = 1' - 0"

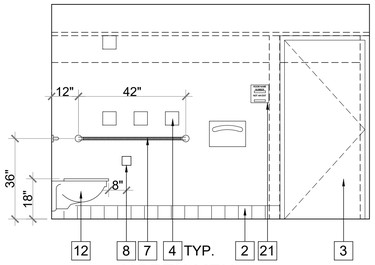

5 NORTH MEN
3/8" = 1' - 0"

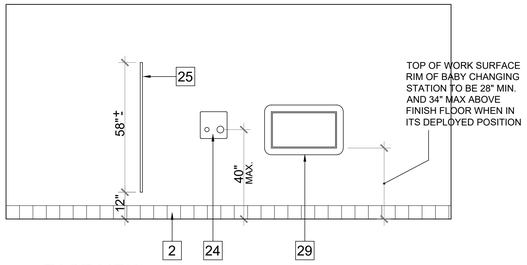

6 EAST MEN
3/8" = 1' - 0"

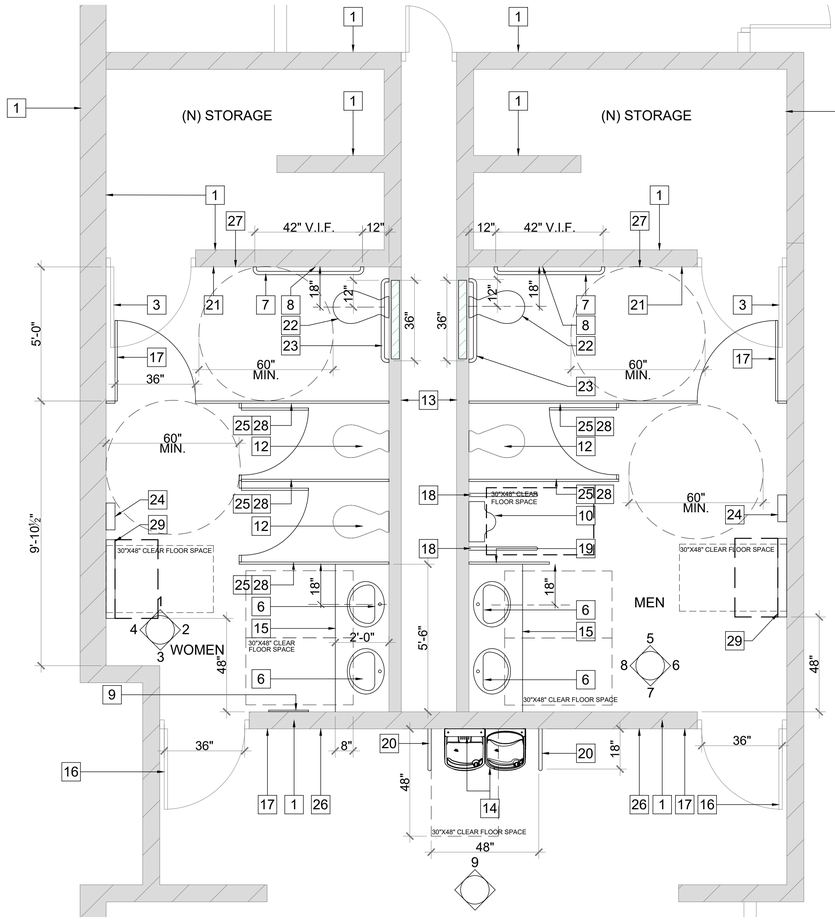

10 ENLARGED RESTROOM FLOOR PLAN
3/8" = 1' - 0"

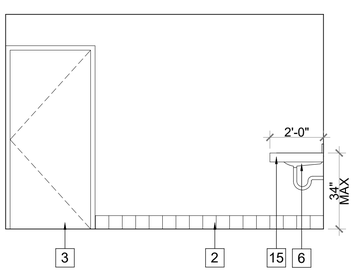

7 SOUTH MEN
3/8" = 1' - 0"

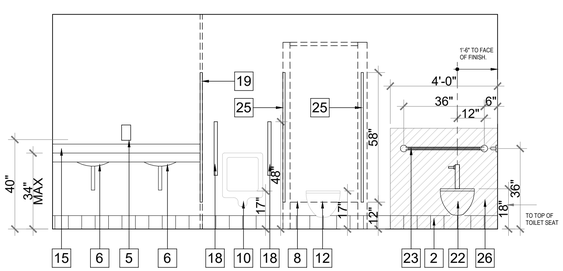

8 WEST MEN
3/8" = 1' - 0"

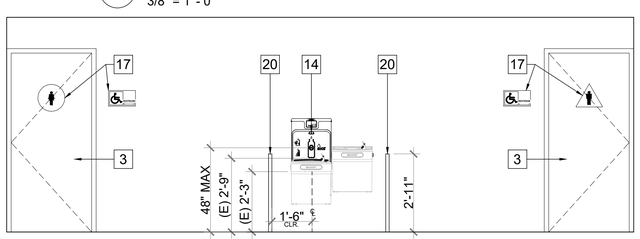

9 NORTH AT DRINKING FOUNTAIN
3/8" = 1' - 0"

NORTH

0' 16" 32" 48"

GRAPHIC SCALE: 3/8" = 1' - 0"

GENERAL NOTES

1. ITEMS INDICATED TO BE RELOCATED OR TO BE REMOVED AND REINSTALLED SHALL BE CAREFULLY REMOVED, PROTECTED FROM DAMAGE, CLEANED, PRIOR TO REINSTALL. ITEMS DAMAGED SHALL BE REPLACED WITH NEW BY CONTRACTOR WITHOUT COST TO THE CITY.
2. REMOVE ALL TOILET ACCESSORIES MOUNTED ON EXISTING TOILET PARTITIONS TO BE REMOVED. REINSTALL ALL EXISTING TOILET ACCESSORIES ON NEW TOILET PARTITIONS.
3. PATCH AND REPAINT ALL THE WALLS, ENTIRELY, IN THE RESTROOMS - MEN'S AND WOMEN'S.
4. PROTECT AND CLEAN FLOOR OF EXISTING RESTROOMS. PATCH & REPAIR EXISTING TILE & GROUT TO MATCH EXISTING.

KEYNOTES

1. (E) CMU WALL, PRIME AND PAINT TO MATCH EXISTING
2. (E) TILE BASE
3. (E) DOOR
4. (E) ACCESS DOORS
5. (E) SOAP DISPENSER , REINSTALLED
6. (N) LAVATORY WITH INSULATED DRAIN PIPE & HOT WATER SUPPLY. SEE PLUMBING DRAWINGS FOR ADDITIONAL INFORMATION. SEE 7/AD-1.0 & 8/AD-2.0 FOR CLEARANCES
7. (E) GRAB BAR - 42"
8. (E) TOILET PAPER DISPENSER
9. (E) WALL MOUNTED MIRROR, 24" X 60"
10. (E) WALL MOUNTED URINAL, ACCESSIBLE
11. (E) DRAINAGE TRENCH.
12. (E) WALL MOUNTED TOILET
13. (E) 2 X 6 WALL @ 16" O.C. W/ INTERIOR LATH & PLASTER ON ROOM SIDE ONLY.
14. (E) ACCESSIBLE DRINKING FOUNTAIN (ELKAY MODEL LZSTL8WSLK). REMOVE AND REINSTALL (E) BOTTLE FILLER STATION TO ACCESSIBLE HEIGHT AT (E) LOWER FOUNTAIN LOCATION
15. (N) COUNTERTOP SEE DETAIL 7/AD-1.0
16. (E) 20 MINUTES RATED DOOR.
17. (N) ACCESSIBLE RESTROOM WALL SIGNAGE, SEE DETAIL 15 ON SHEET AD-3.0. TYPE b
18. (N) GRAB BAR BOBRICK B-5806 24", 9/AD-2.0 (OR APPROVED EQUAL)
19. (N) URINAL SCREEN, FLOOR & CEILING SUPPORTED.
20. (N) PROTECTIVE RAILINGS, REFER TO SDM-108
21. (N) SIGNAGE, SEE DETAIL 15 ON SHEET AD-3.0. TYPE c
22. (N) WALL MOUNTED TOILET, ACCESSIBLE. SEE PLUMBING FOR ADDITIONAL INFORMATION. PATCH (E) FLOOR TILE PER EXIST.
23. (N) GRAB BAR (BOBRICK B-5806 36") (OR APPROVED EQUAL)
24. (N) WALL MOUNTED HAND DRYER (OR APPROVED EQUAL)
25. (N) TOILET PARTITION, FLOOR MOUNTED, OVERHEAD BRACED.
26. (N) WALL FINISH & (N) BASE, TO MATCH (E).
27. (N) TOILET SEAT COVER DISPENSER, SEE DETAIL 5/AD-2.0
28. REINSTALL TOILET AND BATH ACCESSORIES
29. (N) BABY CHANGING STATION

A - 1.3

MLK Recreation Center Moisture Intrusion

PLANS FOR THE CONSTRUCTION OF
MLK Recreation Center Moisture Intrusion

ENLARGED RESTROOM PLANS & INTERIOR ELEVATIONS

CONSULTANT

SPEC. NO. 1945

CITY OF SAN DIEGO, CALIFORNIA
ENGINEERING & CAPITAL PROJECTS DEPARTMENT
SHEET 23 OF 33 SHEETS

WBS B 19001

CONSTRUCTION CHANGE / ADDENDUM

CHANGE	DATE	AFFECTED OR ADDED SHEET NUMBERS	APPROVAL NO.

WARNING
0 1
IF THIS BAR DOES NOT MEASURE 1" THEN DRAWING IS NOT TO SCALE.

The City of SAN DIEGO
Engineering & Capital Projects

ROESLING NAKAMURA TERADA ARCHITECTS INC
363 Fifth Avenue
San Diego, California 92101
P619.233.1023
www.rntarchitects.com

LICENSED ARCHITECT RALPH J. ROESLING NO. C 10867 REN. 2-28-23 STATE OF CALIFORNIA
07-29-2021

APPROVED:
FOR CITY ENGINEER
ELIZABETH SCHROTH-NICHOLS
DEPUTY CITY ENGINEER
DATE
C-80228
RCE#

DESCRIPTION	BY	APPROVED	DATE	FILMED
ORIGINAL	RNT			

SUBMITTED BY:
DELFA GENOVA
PROJECT MANAGER
CHECKED BY:
REZA RASHIDIAN
PROJECT ENGINEER

194-1749
CCS27 COORDINATE

1834-6309
CCS83 COORDINATE

40821-23-D

CONTRACTOR
INSPECTOR
DATE STARTED
DATE COMPLETED

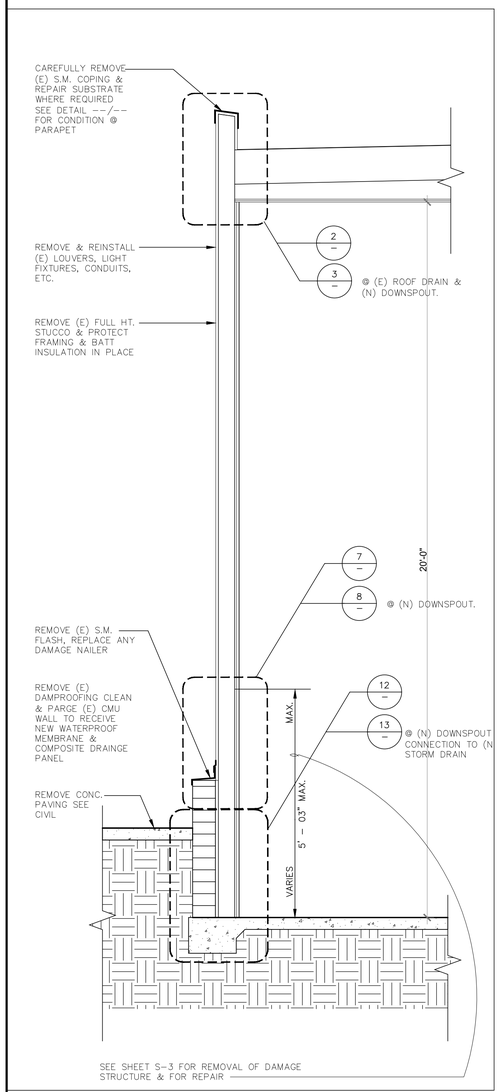

(E) NORTH SECTION @ HANDBALL COURT 1/2" = 1' - 0" 11

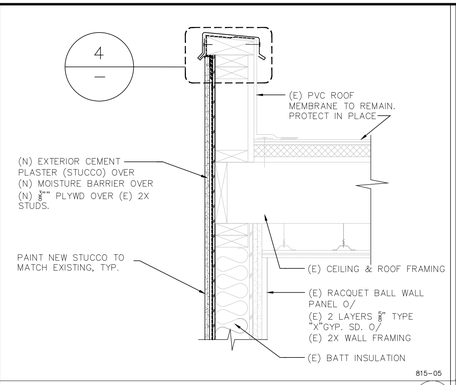

EXTERIOR WALL 1" = 1'-0" 2

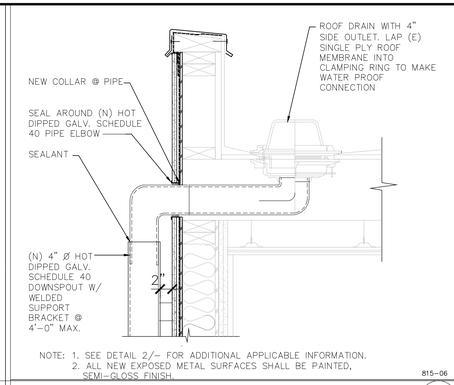

DRAIN & DOWNSPOUT 1" = 1'-0" 3

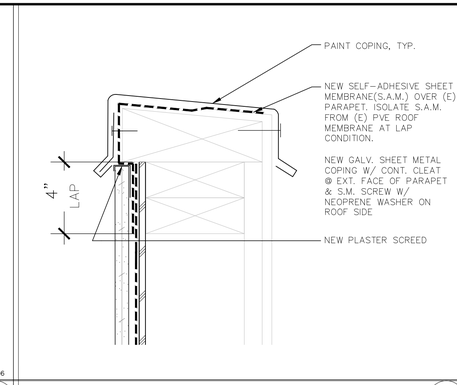

PARAPET COPING 3" = 1'-0" 4

GENERAL NOTES

1. ALL BUILDING ELEMENTS SHOWN ARE EXISTING UNLESS NOTED AS NEW.
2. ALL NEW FINISHES SHALL BE ALIGNED WITH AND INSTALLED FLUSH WITH EXISTING FINISHES UNLESS SHOWN OTHERWISE
4. PAINT ALL NEW SERVICES THAT ARE NOT FACTORY FINISH TO MATCH EXISTING COLORS.

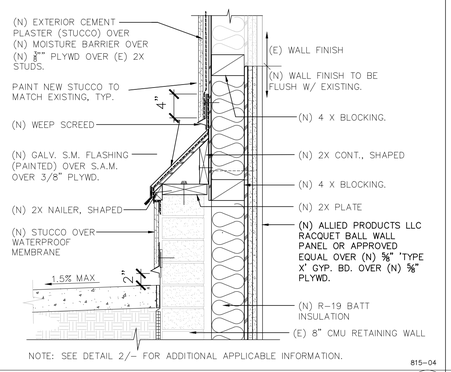

SHEAR WALL AT RACQUET BALL COURTS 1" = 1'-0" 7

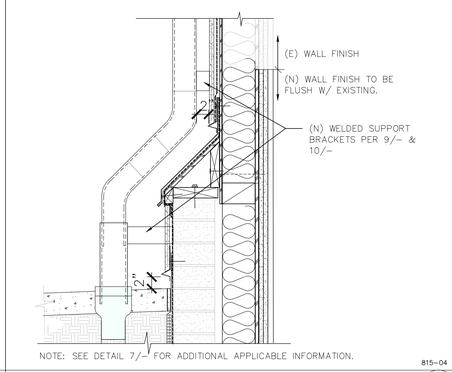

DOWN SPOUT @ SHEARWALL 1" = 1'-0" 8

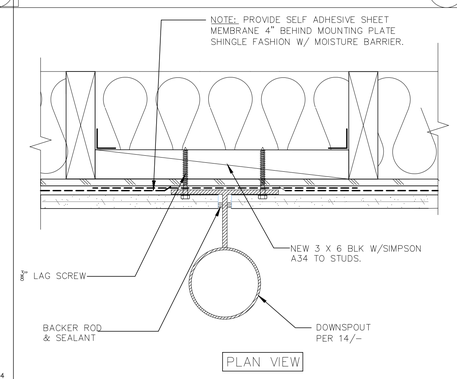

DOWNSPOUT @ PLASTER WALL 3" = 1'-0" 9

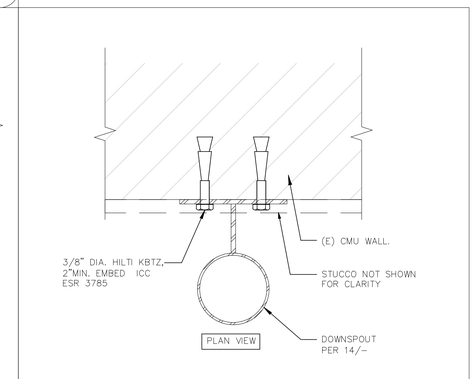

DOWNSPOUT @CMU WALL 3" = 1'-0" 10

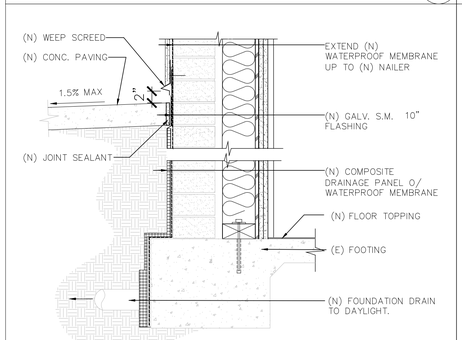

WATERPROOFING @ RETAINING WALL 1" = 1'-0" 12

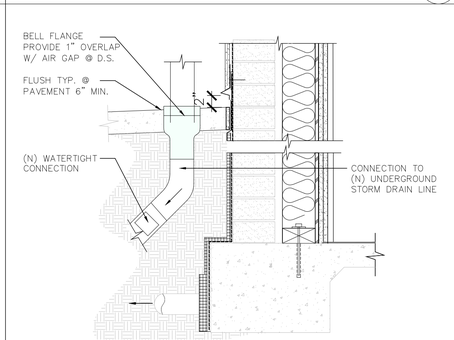

DOWNSPOUT CONNECTION 1" = 1'-0" 13

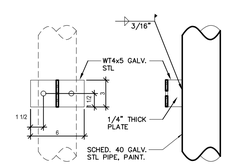

DOWNSPOUT SUPPORT BRACKET 1 1/2" = 1'-0" 14

DOOR SCHEDULE

MARK	LOCATION	DOOR TYPE	HEIGHT	WIDTH	THICKNESS	DOOR MATERIAL	DOOR FINISH	HARDWARE SET	PANIC HARDWARE	FIRE RATED	REMARKS
1-01	COURTYARD	EX.	--	--	--	--	--	04	--	--	1
1-01A	PLATFORM	F	6'-8"	3'-0"	0'-1 3/4"	HM	PAINT	02	YES	NOT RATED	1
1-01B	CORR.	F	6'-8"	3'-0"	0'-1 3/4"	HM	PAINT	01	YES	NOT RATED	1
1-01C	COURTYARD	EX.	--	--	--	--	--	04	--	--	1
12-01A	CORR.	F	6'-8"	3'-0"	0'-1 3/4"	HM	PAINT	01	YES	NOT RATED	1
12-01B	CORR.	F	6'-8"	3'-0"	0'-1 3/4"	HM	PAINT	01	YES	NOT RATED	1
23-01	RESTROOM	EX.	--	--	--	--	--	04	--	--	1
25-01	RESTROOM	EX.	--	--	--	--	--	04	--	--	1

DOOR SCHEDULE GENERAL NOTES

1. ALL DOORS TO HAVE A 5 LBS MAX OPERATING PRESSURE
2. OPERABLE PARTS SHALL BE LOCATED BETWEEN 34" AND 44" A.F.F

ABBREVIATIONS:

EX - EXISTING DOOR
HM - HOLLOW METAL
F - FLUSH

REMARKS

1. THIS DOOR TO REMAIN UNLOCKED DURING BUSINESS HOURS

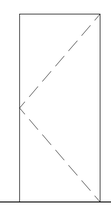

DOOR TYPE F - FLUSH

A - 2.0

PLANS FOR THE CONSTRUCTION OF
MLK Recreation Center Moisture Intrusion

BUILDING SECTIONS AND DOOR SCHEDULE

CONSULTANT

ROESLING NAKAMURA TERADA ARCHITECTS INC
363 Fifth Avenue
San Diego, California 92101
P619.233.1023
www.mtarchitects.com

SPEC. NO. 1945

LICENSED ARCHITECT RALPH J. ROESLING NO. C 10287 REN. 2-28-23 STATE OF CALIFORNIA
07-29-2021

CITY OF SAN DIEGO, CALIFORNIA
ENGINEERING & CAPITAL PROJECTS DEPARTMENT
SHEET 24 OF 33 SHEETS

APPROVED:
FOR CITY ENGINEER
ELIZABETH SCHROTH-NICHOLS
DEPUTY CITY ENGINEER
DATE
C-80228
RCE#

DESCRIPTION	BY	APPROVED	DATE	FILMED
ORIGINAL	RNT			

CONTRACTOR
INSPECTOR
DATE STARTED
DATE COMPLETED

WBS B 19001

SUBMITTED BY: DELFA GENOVA, PROJECT MANAGER
CHECKED BY: REZA RASHIDIAN, PROJECT ENGINEER

194-1749 CCS27 COORDINATE
1834-6309 CCS83 COORDINATE
40821-24-D

MLK Recreation Center Moisture Intrusion

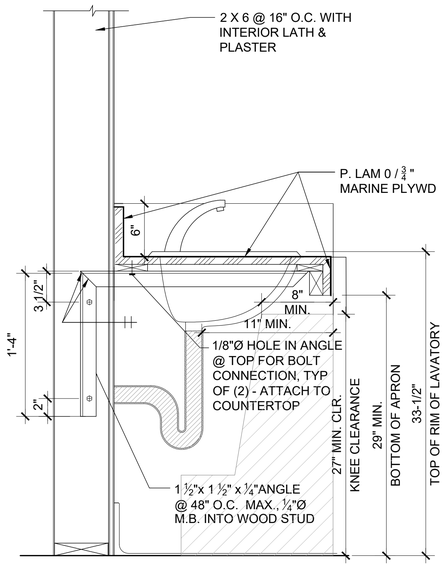

NOTES:

1. FAUCET CONTROLS AND OPERATING MECHANISMS SHALL BE OPERABLE WITH ONE HAND AND SHALL NOT REQUIRE TIGHT GRASPING, PINCHING, OR TWISTING OF THE WRIST. THE FORCE REQUIRED TO ACTIVATE CONTROLS SHALL BE NO MORE THAN 5 LBS. LEVER OPERATED. PUSH TYPE & ELECTRONICALLY CONTROLLED MECHANISMS ARE ACCEPTABLE. SELF CLOSING VALVES ARE ALLOWED IF THE FAUCET REMAINS OPEN FOR AT LEAST 10 SECONDS.
2. FORWARD REACH HEIGHT TO FAUCET CONTROL SHALL BE 44" MAX.
3. INSULATE HOT WATER PIPING AND DRAINPIPE. NO SHARP OR ABRASIVE EDGES.

NOTE:
SEE DETAIL 8/AD-2 FOR ADDITIONAL ACCESSIBILITY REQUIREMENTS BELOW COUNTER

756-AD-6-0-06.DWG

COUNTERTOP WITH SINK 1-1/2" = 1'-0" 7

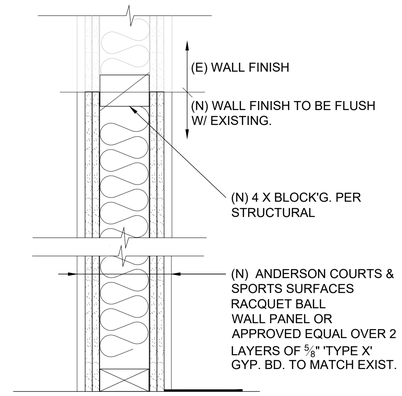

NOTES:

1. PROVIDE CORRIDOR SIDE W/ (N) 5/8" TYPE "X" GYP. BD. TO MATCH EXIST.
2. PAINT ALL WALLS.

INT. WALL 1 1/2" = 1'-0" 8

NOT USED N.T.S 16

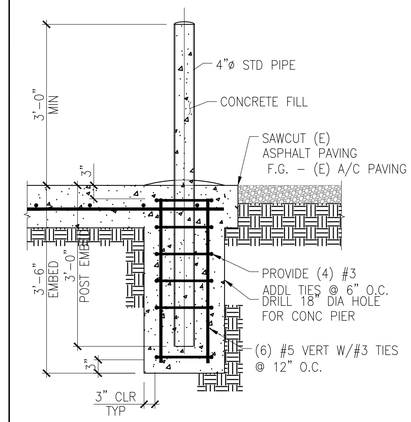

ALL STEEL PARTS SHALL BE HOT DIP GALVANIZED. ALL STEEL ABOVE PAVING SHALL BE PAINTED SAFETY YELLOW OR HAVE A 4" WIDE YELLOW REFLECTIVE TAPE STRIP AROUND THE TOP OF THE BOLLARD.

PROTECTION POST N.T.S 19

NOT USED N.T.S 17

NOT USED N.T.S 18

MLK Recreation Center Moisture Intrusion

AD-1.0

PLANS FOR THE CONSTRUCTION OF
MLK Recreation Center Moisture Intrusion
DETAILS

CONSULTANT

ROESLING NAKAMURA TERADA ARCHITECTS INC
363 Fifth Avenue
San Diego, California 92101
P619.233.1023
www.rntarchitects.com

SPEC. NO. 1945

LICENSED ARCHITECT RALPH J. ROESLING C-10081 REN 3-31-23 STATE OF CALIFORNIA
07-29-2021

CITY OF SAN DIEGO, CALIFORNIA
ENGINEERING & CAPITAL PROJECTS DEPARTMENT
SHEET 25 OF 33 SHEETS

APPROVED:
FOR CITY ENGINEER
ELIZABETH SCHROTH-NICHOLS
DEPUTY CITY ENGINEER
DATE
C-80228
RCE#

DESCRIPTION	BY	APPROVED	DATE	FILMED
ORIGINAL	RNT			

CONTRACTOR
INSPECTOR
DATE STARTED
DATE COMPLETED

WBS B 19001

SUBMITTED BY:
DELFA GENOVA
PROJECT MANAGER
CHECKED BY:
REZA RASHIDIAN
PROJECT ENGINEER

194-1749
CCS27 COORDINATE

1834-6309
CCS83 COORDINATE

40821-25-D

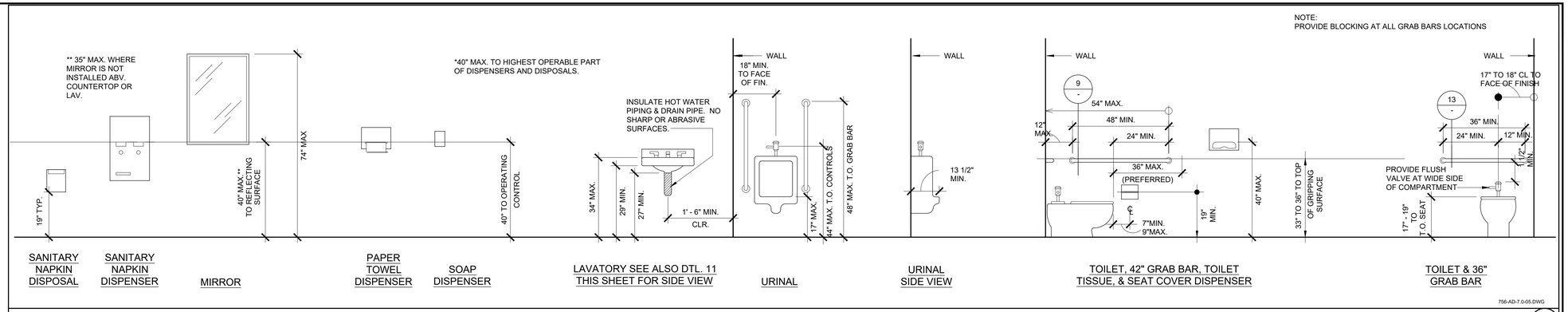

ACCESSIBLE MOUNTING HEIGHTS 1/2" = 1'-0" (5)

NOTES: FAUCET CONTROLS AND OPERATING MECHANISMS SHALL BE OPERABLE WITH ONE HAND AND SHALL NOT REQUIRE TIGHT GRASPING, PINCHING, OR TWISTING OF THE WRIST. THE FORCE REQUIRED TO ACTIVATE CONTROLS SHALL BE NO MORE THAN 5 LBS. LEVER OPERATED. PUSH TYPE & ELECTRONICALLY CONTROLLED MECHANISMS ARE ACCEPTABLE. SELF CLOSING VALVES ARE ALLOWED IF THE FAUCET REMAINS OPEN FOR AT LEAST 10 SECONDS.

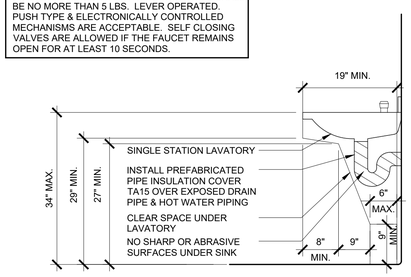

TYP. CLEARANCE AT LAVATORY 3/4" = 1'-0" (8)

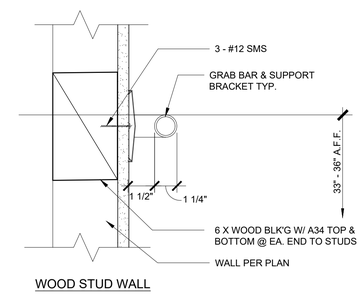

GRAB BAR SUPPORT 3" = 1'-0" (9)

DIMENSIONS FOR ACCESSIBILITY IN FACILITIES	
TOILET (CENTERLINE) FROM WALL	17" - 18"
TOILET SEAT HT. (FF TO TOP OF SEAT)	17" - 19"
GRAB BAR HT. (FF TO TOP OF GRIPPING SURFACE)	33" - 36"
TOILET PAPER (CENTERLINE) IN FRONT OF TOILET SEAT EDGE	7" - 9"
NAPKIN DISPOSAL IN FRONT OF TOILET SEAT EDGE	NO REQUIREMENT
DISPENSER, DISPOSAL, OPERABLE PARTS OR MIRROR HT.	40" MAX.
LAVATORY / SINK TOP HT.	34" MAX.
LAVATORY / SINK KNEE CLEARANCE	27" MIN.
URINAL LIP HT.	17" MAX.
URINAL FLUSH HANDLE HEIGHT	44" MAX.
LOW DRINKING FOUNTAIN BUBBLER HT.	36" MAX.
HIGH DRINKING FOUNTAIN BUBBLER HT.	38" -43"
DRINKING FOUNTAIN KNEE CLEARANCE	27" MIN.
RAMP / STAIR HANDRAIL HT.	34" - 38"
DESKTOP HEIGHT	26" - 30"
DESK KNEE SPACE	27" MIN.
F.E. CABINET HANDLE & F.E. HANDLE	48" MAX.

756-AD-7.0-10.DWG

TYP. MOUNTING HEIGHT DIM. NO SCALE (10)

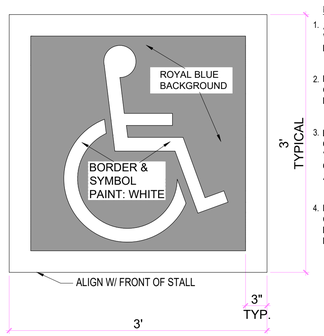

NOTES:

1. ALL STROKES TO BE MIN. 3" WIDE. FIELD: ROYAL BLUE. BORDER / SYMBOL: WHITE.
2. PROVIDE TWO (2) COATS OF REFLECTIVE PAINT. LET DRY BETWEEN COATS.
3. LOCATE SYMBOL IN FRONT OF PARKING STALL, VISIBLE TO TRAFFIC OFFICER and CENTERED AS SHOWN ON SITE PLAN.
4. HANDICAP SYMBOL TO COMPLY W/ CURRENT STATE, LOCAL PUBLIC AGENCY, ETC., REQUIREMENTS, U.N.O.

TYP. INT. SYMBOL OF ACCESSIBILITY N.T.S. (13)

MLK Recreation Center Moisture Intrusion

AD-2.0

PLANS FOR THE CONSTRUCTION OF
MLK Recreation Center Moisture Intrusion

TYPICAL ACCESSIBILITY DETAILS

CONSULTANT

ROESLING NAKAMURA TERADA ARCHITECTS INC
363 Fifth Avenue
San Diego, California 92101
P619.233.1023
www.rntarchitects.com

SPEC. NO. 1945

CITY OF SAN DIEGO, CALIFORNIA
ENGINEERING & CAPITAL PROJECTS DEPARTMENT
SHEET 26 OF 33 SHEETS

WBS B 19001

APPROVED:
FOR CITY ENGINEER
ELIZABETH SCHROTH-NICHOLS
DEPUTY CITY ENGINEER
DATE
C-80228
RCE#

LICENSED ARCHITECT RALPH J. ROESLING NO. C 10287 REN. 2-28-23 STATE OF CALIFORNIA
07-29-2021

DESCRIPTION	BY	APPROVED	DATE	FILMED
ORIGINAL	RNT			

CONTRACTOR
INSPECTOR
DATE STARTED
DATE COMPLETED

SUBMITTED BY: DELFA GENOVA, PROJECT MANAGER
CHECKED BY: REZA RASHIDIAN, PROJECT ENGINEER
194-1749 CCS27 COORDINATE
1834-6309 CCS83 COORDINATE
40821-26-D

CONSTRUCTION CHANGE / ADDENDUM

CHANGE	DATE	AFFECTED OR ADDED SHEET NUMBERS	APPROVAL NO.

WARNING
0 1
IF THIS BAR DOES NOT MEASURE 1" THEN DRAWING IS NOT TO SCALE.

The City of SAN DIEGO Engineering & Capital Projects

SIGNAGE NOTES

1. ALL SIGNS (AT MAIN ENTRANCES, TOILETS, PERMANENT ROOMS AND ASSISTIVE LISTENING SYSTEM(S), ETC.) SHALL COMPLY WITH CBC SECTIONS 11B-703.1 – 11B-703.7.2.4. SEE ALSO CBC SECTION 11B-703.7.2.6 FOR ADDITIONAL SIGNAGE REQUIREMENTS APPLICABLE TO SANITARY FACILITIES.
2. THE INTERNATIONAL SYMBOL OF ACCESSIBILITY SHALL BE THE STANDARD USED TO INDENTIFY FACILITIES THAT ARE ACCESSIBLE TO AND USABLE BY PHYSICALLY DISABLED PERSONS AS SET FORTH AND AS SPECIFICALLY REQUIRED IN THESE NOTES.

3. COLOR OF SYMBOL: THE SYMBOL SPECIFIED ABOVE SHALL CONSIST OF A WHITE FIGURE ON A BLUE BACKGROUND. THE BLUE SHALL BE EQUAL TO COLOR NO. 15090 IN FEDERAL STANDARD 595C.

4. BRAILLE SYMBOLS: CALIFORNIA CONTRACTED GRADE 2 BRAILLE SHALL BE USED WHEREVER BRAILLE SYMBOLS ARE SPECIFICALLY REQUIRED. ROUNDED OR DOMED DOTS, EACH DISTINCT AND SEPARATE, SHALL BE 1/10 INCH ON CENTER IN EACH CELL WITH 2/10 INCH SPACE BETWEEN CELLS. DOTS SHALL BE RAISED A MINIMUM OF 1/40 INCH ABOVE THE BACKGROUND. CBC 11B-703.3

RECOMMENDED ROUNDED OR DOMED CALIFORNIA BRAILLE DOTS, EACH DISTINCT AND SEPARATE.

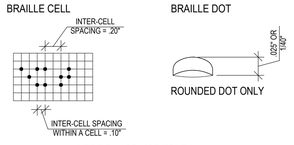

(VERTICAL OR HORIZONTAL)

5. CHARACTER PROPORTION: VISUAL CHARACTERS ON SIGNS SHALL BE SELECTED FROM FONTS WHERE THE WIDTH OF THE UPPERCASE LETTER "O" IS 60 PERCENT MINIMUM AND 110 PERCENT MAXIMUM OF THE HEIGHT OF THE UPPERCASE LETTER "I". STROKE THICKNESS OF THE UPPERCASE LETTER "I" SHALL BE 10 PERCENT MINIMUM AND 20 PERCENT MAXIMUM OF THE HEIGHT OF THE CHARACTER. CBC 11B-703.2.4 AND 11B-703.2.6.

6. CHARACTER HEIGHT: CHARACTERS ON SIGNS REQUIRED TO BE ACCESSIBLE BY SECTION 11B-703.1, ITEMS 2 AND 3 SHALL BE SIZED ACCORDING TO THE FOLLOWING TABLE. THE MINIMUM HEIGHT IS MEASURED USING AN UPPERCASE LETTER "I". LOWERCASE CHARACTERS ARE PERMITTED. VIEWING DISTANCE SHALL BE MEASURED AS THE HORIZONTAL DISTANCE BETWEEN THE CHARACTER AND AN OBSTRUCTION PREVENTING FURTHER APPROACH TOWARDS THE SIGN.

HEIGHT TO FINISH FLOOR OR GROUND FROM BASELINE OF	HORIZONTAL VIEWING DISTANCE	MININUM CHARACTER HEIGHT
40 INCHES (1015 MM)TO LESS THAN OR EQUAL TO 70 INCHES (1780 MM)	LESS THAN 72 INCHES (1830 MM)	5/8" INCH (16 MM)
	72 INCHES (1830 MM) AND GREATER	5/8 INCH (16 MM), PLUS 1/8 INCH (3.2 MM) PER FOOT (305 MM) OF VIEWING DISTANCE ABOVE 72 INCHES (1830 MM)
GREATER THAN 70 INCHES (1780 MM) TO LESS THAN OR EQUAL TO 120 INCHES (3050 MM)	LESS THAN 180 INCHES (4570 MM)	2" INCH (51 MM)
	180 INCHES (4570 MM) AND GREATER	2 INCHES (51 MM), PLUS 1/8 INCH (3.2 MM) PER FOOT (305 MM) OF VIEWING DISTANCE ABOVE 180 INCHES (4570 MM)
GREATER THAN 120 INCHES (3050 MM)	LESS THAN 21 FEET (6400 MM)	3 INCHES (75 MM)
	21 FEET (6400 MM) AND GREATER	3 INCHES (75 MM), PLUS 1/8 INCH (3.2 MM) PER FOOT (305 MM) OF VIEWING DISTANCE ABOVE 21 FEET (6400 MM)

7. FINISH AND CONTRAST OF SYMBOL: CHARACTERS AND SYMBOLS SHALL CONTRAST WITH THEIR BACKGROUND, EITHER LIGHT CHARACTERS ON A DARK BACKGROUND OR DARK CHARACTER ON A LIGHT BACKGROUND. CONTRAST MUST BE A 70% MINIMUM. CHARACTERS AND BACKGROUND SHALL HAVE A NON-GLARE FINISH. CBC 11B-703.5.1

8. RAISED CHARACTERS AND PICTORIAL SYMBOL SIGNS. WHEN RAISED CHARACTERS OR SYMBOLS ARE USED, THEY SHALL CONFORM TO THE FOLLOWING:

A. TYPE: LETTERS AND NUMBERS ON SIGNS SHALL BE RAISED 1/32 INCH MINIMUM AND SHALL BE SANS-SERIF UPPERCASE CHARACTERS ACCOMPANIED CALIFORNIA CONTRACTED GRADE 2 BRAILLE (SEE NOTE 4).
B. SIZE: RAISED CHARACTERS OR SYMBOLS SHALL BE A MINIMUM OF 5/8 INCH HIGH AND A MAXIMUM OF 2 INCHES HIGH.
C. PICTORIAL SYMBOL SIGN (PICTOGRAMS): PICTORIAL SYMBOL SIGNS (PICTOGRAMS) SHALL BE ACCOMPANIED BY THE EQUIVALENT VERBAL DESCRIPTION PLACED DIRECTLY BELOW THE PICTOGRAM. THE BORDER DIMENSION OF THE PICTOGRAM SHALL BE A MINIMUM OF 6 INCHES IN HEIGHT.
D. CHARACTER PLACEMENT: CHARACTERS AND BRAILLE SHALL BE IN A HORIZONTAL FORMAT. BRAILLE SHALL BE PLACED A MINIMUM OF 3/8 INCH AND A MAXIMUM OF ½ INCH DIRECTLY BELOW THE TACTILE CHARACTERS; FLUSH LEFT OR CENTERED. WHEN TACTILE TEXT IS MULTI-LINED, ALL BRAILLE SHALL BE PLACED TOGETHER BELOW ALL LINES OF TACTILE TEXT.
E. PROPORTIONS: RAISED CHARACTERS ON SIGNS SHALL BE SELECTED FROM FONTS WHERE THE WIDTH OF THE UPPERCASE LETTER "O" IS 60 PERCENT MINIMUM AND 110 PERCENT MAXIMUM OF THE HEIGHT OF THE UPPERCASE LETTER "I". STROKE THICKNESS OF THE UPPERCASE LETTER "I" SHALL BE 10 PERCENT MINIMUM AND 15 PERCENT MAXIMUM OF THE HEIGHT OF THE CHARACTER.

9. ENTRANCE SIGNS: ALL BUILDING ENTRANCES THAT ARE ACCESSIBLE TO AND USABLE BY PERSONS WITH DISABILITIES SHALL BE IDENTIFIED WITH AT LEAST ONE STANDARD SIGN AND WITH ADDITIONAL DIRECTIONAL SIGNS, AS REQUIRED, TO BE VISIBLE TO PERSONS ALONG APPROACHING PEDESTRIAN WAYS.

10. INFORMATION POSTED: BUILDINGS THAT HAVE BEEN REMODELED TO PROVIDE SPECIFIC SANITARY FACILITIES AND/OR ELEVATORS FOR PUBLIC USE THAT CONFORM TO THESE BUILDING STANDARDS SHALL HAVE THIS INFORMATION POSTED IN THE BUILDING LOBBY, PREFERABLY AS PART OF THE BUILDING DIRECTORY.

11. MOUNTING LOCATION AND HEIGHT: WHERE PERMANENT IDENTIFICATION SIGNS ARE PROVIDED FOR ROOMS AND SPACES, SIGNS SHALL BE INSTALLED ON THE WALL ADJACENT TO THE LATCH SIDE OF THE DOOR. WHERE THERE IS NO WALL SPACE ON THE LATCH SIDE, INCLUDING AT DOUBLE LEAF DOORS, SIGNS SHALL BE PLACED ON THE NEAREST ADJACENT WALL, PREFERABLY ON THE RIGHT.
WHERE PERMANENT IDENTIFICATION SIGNAGE IS PROVIDED FOR ROOMS AND SPACES THEY SHALL BE LOCATED ON THE APPROACH SIDE OF THE DOOR AS ONE ENTERS THE ROOM OR SPACE. SIGNS THAT IDENTIFY EXITS SHALL BE LOCATED ON THE APPROACH SIDE OF THE DOOR AS ONE EXITS THE ROOM OR SPACE.
SIGNS WITH RAISED CHARACTERS AND BRAILLE SHALL BE LOCATED 48 INCHES MINIMUM ABOVE THE FINISH FLOOR OR GROUND SURFACE, MEASURED FROM THE BASE LINE OF THE LOWEST LINE OF BRAILLE AND 60 INCHES MAXIMUM ABOVE THE FINISH FLOOR OR GROUND SURFACE, MEASURED FROM THE BASELINE OF THE HIGHEST LINE OF RAISED CHARACTERS. MOUNTING LOCATION SHALL BE DETERMINED SO THAT A PERSON MAY APPROACH WITHIN 3 INCHES OF SIGNAGE WITHOUT ENCOUNTERING PROTRUDING OBJECTS OR STANDING WITHIN THE SWING OF A DOOR.

SIGNS SHALL BE INSTALLED WITH TAMPER RESISTANT SCREWS TO SUBSTRATE, 4 SCREWS MINIMUM FOR RECTANGULAR SIGNS & 3 SCREWS MINIMUM FOR CIRCULAR OR TRIANGULAR SIGNS.

756-AD-7.3-11.DWG

SIGNAGE NOTES, MOUNTING AND ANCHORING (11)

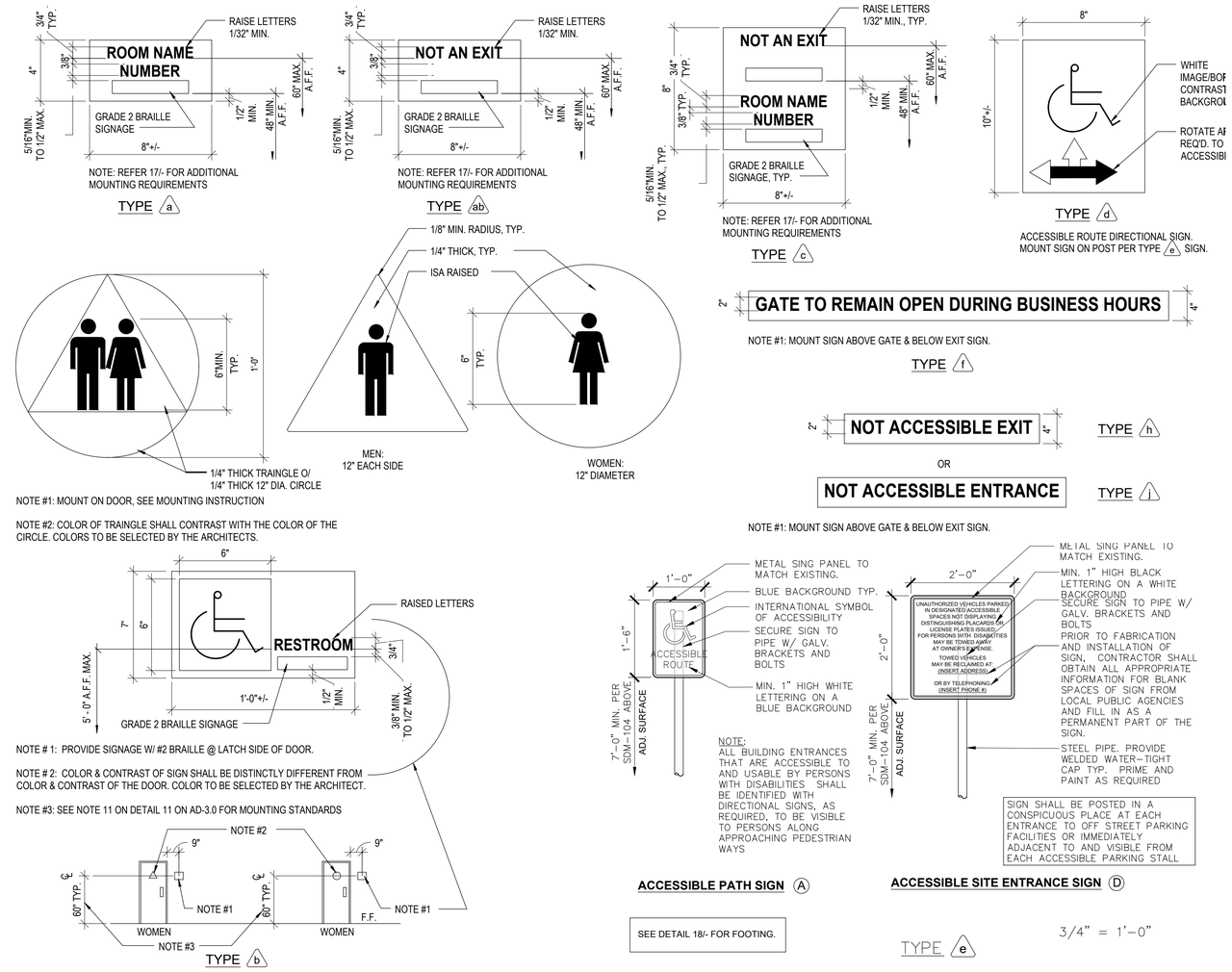

SIGN TYPES (15)

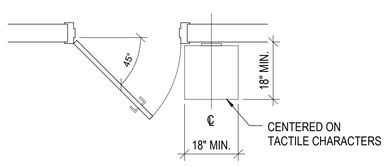

756-AD-7.1-17.DWG

TACTILE SIGN @ DOOR 1/2" = 1'-0" (17)

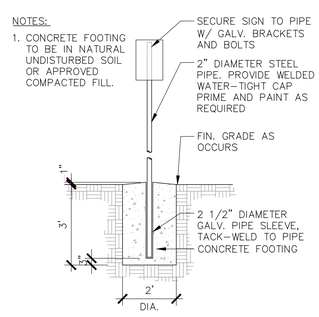

POLE MOUNTED SIGN 3/8" = 1'-0" (18)

MLK Recreation Center Moisture Intrusion

AD-3.0

PLANS FOR THE CONSTRUCTION OF
MLK Recreation Center Moisture Intrusion

TYPICAL SIGNAGE DETAILS

CONSULTANT

ROESLING NAKAMURA TERADA ARCHITECTS INC
363 Fifth Avenue
San Diego, California 92101
P619.233.1023
www.rntarchitects.com

SPEC. NO. 1945

LICENSED ARCHITECT RALPH J. ROESLING NO. C-10987 REV. 2-27-23 STATE OF CALIFORNIA
07-29-2021

CITY OF SAN DIEGO, CALIFORNIA
ENGINEERING & CAPITAL PROJECTS DEPARTMENT
SHEET 27 OF 33 SHEETS

APPROVED:
FOR CITY ENGINEER — DATE
ELIZABETH SCHROTH-NICHOLS — C-80228
DEPUTY CITY ENGINEER — RCE#

DESCRIPTION	BY	APPROVED	DATE	FILMED
ORIGINAL	RNT			

CONTRACTOR — DATE STARTED
INSPECTOR — DATE COMPLETED

WBS B 19001

SUBMITTED BY: DELFA GENOVA, PROJECT MANAGER
CHECKED BY: REZA RASHIDIAN, PROJECT ENGINEER

194-1749 CCS27 COORDINATE
1834-6309 CCS83 COORDINATE

40821-27-D

GENERAL

1. THE CONTRACTOR SHALL VERIFY ALL DIMENSIONS, ELEVATIONS AND CONDITIONS AT THE JOB SITE BEFORE STARTING WORK, AND SHALL NOTIFY THE ENGINEER IMMEDIATELY OF ANY DISCREPANCIES.
2. ALL OMISSIONS OR CONFLICTS BETWEEN THE VARIOUS ELEMENTS OF THE WORKING DRAWINGS AND SPECIFICATIONS SHALL BE BROUGHT TO THE ATTENTION OF THE ENGINEER BEFORE PROCEEDING WITH ANY WORK SO INVOLVED.
3. NOTES AND DETAILS ON THE DRAWINGS SHALL TAKE PRECEDENCE OVER THESE GENERAL NOTES AND TYPICAL DETAILS IN CASE OF CONFLICT.
4. IN NO CASE SHALL WORKING DIMENSIONS BE SCALED FROM PLANS, SECTIONS OR DETAILS ON THESE STRUCTURAL DRAWINGS.
5. ALL MATERIALS AND WORKMANSHIP SHALL BE IN ACCORDANCE WITH LOCAL STANDARDS AND THE APPLICABLE PROVISIONS OF THE 2016 CALIFORNIA BUILDING CODE (CBC) AS AMENDED BY THE CITY OF SAN DIEGO.
6. WHERE NO CONSTRUCTION DETAILS ARE SHOWN OR NOTED FOR ANY PART OF THE WORK, SUCH DETAILS SHALL BE THE SAME AS FOR SIMILAR WORK SHOWN ON THE DRAWINGS. MEMBER SIZES ARE GENERALLY FOUND ON PLANS. DETAILS AND SECTIONS GENERALLY REFER TO GENERIC ELEMENTS.
7. THE CONTRACT STRUCTURAL DRAWINGS AND SPECIFICATIONS REPRESENT THE FINISHED STRUCTURE, UNLESS OTHERWISE INDICATED. THEY DO NOT INDICATE THE METHOD OF CONSTRUCTION. THE CONTRACTOR SHALL PROVIDE ALL MEASURES NECESSARY TO PROTECT THE STRUCTURE, WORKMEN, AND OTHER PERSONS DURING CONSTRUCTION. SUCH MEASURES SHALL INCLUDE, BUT NOT BE LIMITED TO, BRACING, SHORING FOR CONSTRUCTION EQUIPMENT, SHORING FOR THE BUILDING, SHORING FOR EARTH BANKS, FORMS, SCAFFOLDING, PLANKING, SAFETY NETS, SUPPORT AND BRACING FOR CRANES AND GIN POLES, ETC. THE CONTRACTOR SHALL SUPERVISE AND DIRECT THE WORK AND HE OR SHE SHALL BE SOLELY RESPONSIBLE FOR ALL CONSTRUCTION MEANS, METHODS, TECHNIQUES, SEQUENCES AND PROCEDURES. OBSERVATION VISITS TO THE SITE BY THE ENGINEER SHALL NOT CONSTITUTE INSPECTION OF THE ABOVE ITEMS.
8. THE PROJECT SPECIFICATIONS FORM A PART OF THESE GENERAL NOTES.
9. THIS STRUCTURE IS DEPENDENT UPON DIAPHRAGM ACTION FOR LATERAL STABILITY. THE CONTRACTOR SHALL PROVIDE AND MAINTAIN ADEQUATE ERECTION SHORING AND BRACING AS REQUIRED FOR STABILITY OF THE STRUCTURE DURING ALL PHASES OF CONSTRUCTION.
10. NOTIFY THE STRUCTURAL ENGINEER WHEN DRAWINGS BY OTHERS SHOW OPENINGS, POCKETS, ETC, NOT SHOWN ON THE STRUCTURAL DRAWINGS, BUT WHICH ARE LOCATED IN THE STRUCTURAL MEMBERS.
11. THE CONTRACTOR IS RESPONSIBLE FOR PROTECTING EXISTING UTILITIES IN THE WORK AREA AND SHALL REPAIR ANY DAMAGE CAUSED BY HIS OR HER OPERATIONS AT HIS OR HER OWN COST.
12. ALL SPECIFICATION AND CODES NOTED SHALL BE THE LATEST APPROVED EDITIONS AND REVISIONS BY THE GOVERNMENTAL AGENCY HAVING JURISDICTION OVER THIS PROJECT.
13. CONSTRUCTION MATERIALS SHALL BE SPREAD OUT WHEN PLACED ON FRAMED FLOORS OR ROOFS. THE CONSTRUCTION MATERIAL LOAD SHALL NOT EXCEED THE DESIGN LIVE LOAD PER SQUARE FOOT. PROVIDE ADEQUATE SHORING AND/OR BRACING WHERE STRUCTURE HAS NOT ATTAINED DESIGN STRENGTH.
14. NOTICE TO THE APPLICANT/OWNER/OWNER'S AGENT/ARCHITECT OR ENGINEER OF RECORD: BY USING THESE PERMITTED CONSTRUCTION DRAWINGS FOR CONSTRUCTION/INSTALLATION OF THE WORK SPECIFIED HEREIN, YOU AGREE TO COMPLY WITH THE REQUIREMENTS OF CITY OF SAN DIEGO FOR SPECIAL INSPECTIONS, STRUCTURAL OBSERVATIONS, CONSTRUCTION MATERIAL TESTING AND OFF-SITE FABRICATION OF BUILDING COMPONENTS, CONTAINED IN THE STATEMENT OF SPECIAL INSPECTIONS AND, AS REQUIRED BY THE CALIFORNIA CONSTRUCTION CODES.

GENERAL (CONTINUED)

15. NOTICE TO THE CONTRACTOR/BUILDER/INSTALLER/ SUB-CONTRACTOR/OWNER-BUILDER: BY USING THESE PERMITTED CONSTRUCTION DRAWINGS FOR CONSTRUCTION/INSTALLATION/ OF THE WORK SPECIFIED HEREIN, YOU ACKNOWLEDGE AND ARE AWARE OF, THE REQUIREMENTS CONTAINED IN THE STATEMENT OF SPECIAL INSPECTIONS. YOU AGREE TO COMPLY WITH THE REQUIREMENTS OF CITY OF SAN DIEGO FOR SPECIAL INSPECTIONS, STRUCTURAL OBSERVATIONS, CONSTRUCTION MATERIAL TESTING AND OFF-SITE FABRICATION OF BUILDING COMPONENTS, CONTAINED IN THE STATEMENT OF SPECIAL INSPECTIONS AND, AS REQUIRED BY THE CALIFORNIA CONSTRUCTION CODES.

DESIGN CRITERIA

1. WIND DESIGN DATA:

   WIND SPEED
   Vult (3 SECOND GUST) = 115 M.P.H.
   ULTIMATE (1609.3, FIGURES 1609.3 (1), (2) OR (3))
   RISK CATEGORY = II (TABLE 1604.5)
   WIND EXPOSURE CATEGORY = C (1609.4)
   ALTERNATE ALL-HEIGHTS METHOD: (CBC 1609.4)
   WIND DIRECTIONALITY FACTOR Kd = 0.85 (ASCE TABLE 26.6-1)
   WIND IMPORTANCE FACTOR I_W = 1.00 (ASCE TABLE 1.5-2)
   TOPOGRAPHIC FACTOR Kzt = 1.0 (ASCE 26.8)
   GUST EFFECT FACTOR G = 0.85 (ASCE 26.9)
   ENCLOSURE CLASSIFICATION = ENCLOSED (ASCE 26.10)

WOOD

1. ALL WOOD MEMBERS SHALL BE DOUGLAS FIR/LARCH, CONFORMING TO DOC PS 20 USING CURRENT WWPA GRADING RULES, UNLESS OTHERWISE NOTED. EACH PIECE OF LUMBER SHALL BE GRADE MARKED AND SHALL NOT EXCEED A 19% MOISTURE CONTENT AT TIME OF PLACEMENT.

   A. JOISTS AND PLANKS: STUDS, BLOCKING, JOISTS AND RAFTERS — 2" TO 4" THICK, 2" AND WIDER; NO. 2

2. ALL PLYWOOD SHALL CONFORM TO DOC PS 1 OR PS 2 AND SHALL BE IDENTIFIED WITH APA GRADE MARK. SEE PLANS FOR THICKNESS AND GRADE. PROVIDE 3x BLOCKING AT ALL UNSUPPORTED JOINTS U.O.N.
3. RUN PLYWOOD ENTIRE LENGTH OF WALL WHERE PLYWOOD OCCURS AT INTERIOR FACE OF WALL.
4. LAG SCREWS: PREDRILL WITH A BIT SIZE OF 40% TO 70% OF THE SHANK DIAMETER FOR THE THREADED PORTION. LEAD HOLES SHALL BE THE SAME LENGTH AS THE UNTHREADED SHANK AND THE SAME DIAMETER AS THE SHANK. LUBRICATE LAGS AND SCREW INTO PLACE. CUT WASHERS SHALL BE PROVIDED UNDER HEADS WHICH BEAR ON WOOD.
5. BOLTS IN WOOD SHALL NOT BE LESS THAN 7 DIAMETERS FROM THE END AND 4 DIAMETERS FROM THE EDGE UNLESS OTHERWISE DETAILED. ALL NUTS SHALL BE TIGHTENED WHEN INSTALLED AND RETIGHTENED AT THE COMPLETION OF WORK OR BEFORE CLOSING IN. THREADED PROJECTION SHALL BE 1/16" MINIMUM ABOVE NUT.
6. DRILL HOLES 1/16 INCH LARGER IN DIAMETER THAN THE BOLT DIAMETER BEING USED. BOLT THREADS SHALL NOT BEAR ON WOOD. PROVIDE WASHERS WHERE BOLT HEAD OR NUT BEAR ON WOOD. PROVIDE SQUARE PLATE WASHERS FOR SILL BOLTS.
7. NO CHECKS OR SPLITS ALLOWED AT AREAS TO BE BOLTED.
8. ALL CONNECTORS SHALL BE BY SIMPSON STRONG-TIE COMPANY OR ICC EQUAL.
9. DIAPHRAGM (VERTICAL) SHEATHING NAILS OR OTHER APPROVED CONNECTORS SHALL BE DRIVEN SO THAT THEIR HEAD OR CROWN IS FLUSH WITH THE SURFACE OF THE SHEATHING.

WOOD (CONTINUED)

10. WOOD PLATES OR SILLS SHALL BE BOLTED TO THE FOUNDATION OR FOUNDATION WALL WITH 5/8-INCH DIAMETER BOLTS MINIMUM WITH PLATE WASHERS 3"SQx5/16" THICK MINIMUM.
11. NAILS SHALL BE COMMON WIRE UON. MIN PENETRATION SHALL BE 11 NAIL DIAMETERS. PREDRILL TO A DIAMETER NO GREATER THAN 3/4 OF NAIL DIAMETER TO PREVENT SPLITTING WHERE NECESSARY.
12. PRESERVATIVE TREATED WOOD: FOUNDATION PLATES AND SILLS ON A CONCRETE SLAB OR FOUNDATION, WHICH IS IN DIRECT CONTACT WITH EARTH, SHALL BE TREATED WOOD. NEWLY EXPOSED SURFACES RESULTING FROM FIELD CUTTING, BORING OR HANDLING SHALL BE FIELD TREATED.
13. FASTENERS, NAILS AND CONNECTORS IN CONTACT WITH PRESERVATIVE TREATED WOOD SHALL BE HOT DIPPED ZINC COATED GALVANIZED IN ACCORDANCE WITH ASTM A153 CLASS G185 OR SHALL BE STAINLESS STEEL.
14. EXTERIOR EXPOSED CONNECTORS: HOT-DIPPED GALVANIZED OR STAINLESS STEEL WITH HOT-DIPPED GALVANIZED OR STAINLESS STEEL FASTENERS.

NAILING SCHEDULE

(CBC TABLE 2304.10.1)

DESCRIPTION OF BUILDING ELEMENTS	FASTENING	LOCATION
WALL		
STUD TO STUD (NOT AT BRACED WALL PANELS)	16d COMMON @ 24" O.C.	FACE NAIL
STUD TO STUD AND ABUTTING STUDS AT INTERSECTING WALL CORNERS (AT BRACED WALL PANELS)	16d COMMON @ 16" O.C.	FACE NAIL
BUILT-UP HEADER (2" TO 2" HEADER)	16d COMMON @ 16" O.C.	EACH EDGE, FACE NAIL
CONTINUOUS HEADER TO STUD	(4) 8d COMMON	TOENAIL
TOP PLATE TO TOP PLATE	16d COMMON @ 16" O.C.	FACE NAIL
TOP PLATE TO TOP PLATE, AT END JOINTS (MINIMUM 24" LAP SPICE LENGTH EACH SIDE OF END JOINT)	(8) 16d COMMON	EACH SIDE OF END JOINT, FACE NAIL
BOTTOM PLATE TO JOIST, RIM JOIST, BAND JOIST OR BLOCKING (NOT AT BRACED WALL PANELS)	16d COMMON @ 16" O.C.	FACE NAIL
BOTTOM PLATE TO JOIST, RIM JOIST, BAND JOIST OR BLOCKING AT BRACED WALL PANELS	(2) 16d COMMON @ 16" O.C.	FACE NAIL
STUD TO TOP OR BOTTOM PLATE	(4) 8d COMMON	TOENAIL
	(2) 16d COMMON	END NAIL
TOP OR BOTTOM PLATE TO STUD	(2) 16d COMMON	END NAIL
TOP PLATES, LAPS AT CORNERS AND INTERSECTIONS	(2) 16d COMMON	FACE NAIL

DRILLED IN ANCHORS AND BARS

1. ALL ANCHORS SHALL BE ICC APPROVED.
2. ALL ANCHORS SHALL BE INSTALLED IN STRICT ACCORDANCE WITH MANUFACTURER'S APPROVED RESEARCH REPORT. SUBSTITUTIONS ARE REQUIRED TO BE REVIEWED BY THE ENGINEER TO A SIMILAR ACCEPTABLE PERFORMANCE IN ACCORDANCE WITH THE APPROPRIATE ICC-ES REPORT.

DRILLED IN ANCHORS AND BARS (CONTINUED)

3. DRILLED IN ADHESIVE ANCHORS FOR CONCRETE SHALL BE:
   HILTI HIT-RE 500 V3 . . . ESR-3814
   SIMPSON SET-XP ESR-2508
4. UNLESS OTHERWISE SHOWN, PROVIDE A MINIMUM OF 6xDIAMETER EDGE DISTANCES AND 12xDIAMETER SPACING OF ANCHORS.
5. DRILLED IN ANCHORS AND THREADED ROD ASSEMBLIES FOR EXTERIOR USE SHALL BE STAINLESS STEEL.
6. DRILLED IN ANCHORS SHALL NOT BE INSTALLED IN CONCRETE THAT HAS NOT REACHED THE SPECIFIED 28 DAY STRENGTH.
7. SPECIAL INSPECTION IN ACCORDANCE WITH TABLE 1705.3 OF THE CBC MUST BE PROVIDED FOR ALL ANCHOR INSTALLATIONS. THE SPECIAL INSPECTOR MUST BE ON THE JOBSITE DURING ANCHOR INSTALLATION TO VERIFY ANCHOR TYPE, ANCHOR DIMENSIONS, CONCRETE TYPE, CONCRETE COMPRESSIVE STRENGTH, HOLE DIMENSIONS, HOLE CLEANING PROCEDURES, ANCHOR SPACING, EDGE DISTANCES, CONCRETE THICKNESS, ANCHOR EMBEDMENT, AND TIGHTENING TORQUE. THE SPECIAL INSPECTOR MUST VERIFY THE INSTALLATIONS OF EACH TYPE AND SIZE OF ADHESIVE ANCHOR BY CONSTRUCTION PERSONNEL ON SITE.

STRUCTURAL DEMOLITION

1. THE CONTRACTOR SHALL BE RESPONSIBLE FOR SELECTING METHODS OF DEMOLITION SO THAT THE REMAINING STRUCTURE WILL NOT BE IMPAIRED OR DAMAGED.
2. SAWCUTTING AND CORING SHALL BE UTILIZED TO THE FULLEST EXTENT POSSIBLE. ISOLATE CONSTRUCTION TO BE REMOVED FROM THE STRUCTURE TO REMAIN.
3. OVERCUT OPENINGS AS INDICATED. USE APPROPRIATE SIZE CORES AT CORNERS SO THAT RUN BY OF SAWCUTS WILL NOT BE NECESSARY. USE CHIPPING TOOLS WHERE CORNERS ARE REQUIRED TO BE SQUARE.

STRUCTURAL DEMOLITION (CONTINUED)

4. SELECT METHODS OF TRANSPORTING DEBRIS THROUGH THE BUILDING WHICH WILL NOT OVERLOAD THE STRUCTURE.
5. PROVIDE SHORING REQUIRED TO SUPPORT THE STRUCTURE WHEN NEW WORK TO STRENGTHEN THE STRUCTURE CANNOT BE INSTALLED PRIOR TO DEMOLITION. MAINTAIN SHORING UNTIL NEW WORK HAS ATTAINED DESIGN STRENGTH.
6. WHERE INDICATED TO BE DEMOLISHED, EXISTING CONSTRUCTION SHALL BE REMOVED TO A LEGAL DUMP SITE.
7. MAINTAIN THE WORK AREA AS A SAFE ENVIRONMENT BY DISPOSING OF MATERIALS ON A REGULAR BASIS.

QUALITY CONTROL

1. THE SPECIAL INSPECTOR MUST BE CERTIFIED BY THE CITY OF SAN DIEGO, DEVELOPMENT SERVICES, IN THE CATEGORY OF WORK REQUIRED TO HAVE SPECIAL INSPECTION.
2. THE CONSTRUCTION MATERIALS TESTING LABORATORY MUST BE APPROVED BY THE CITY OF SAN DIEGO, DEVELOPMENT SERVICES, FOR TESTING OF MATERIALS, SYSTEMS, COMPONENTS AND EQUIPMENT.
3. THE SPECIAL INSPECTIONS IDENTIFIED ON PLANS ARE, IN ADDITION TO, AND NOT SUBSTITUTE FOR, THOSE INSPECTIONS REQUIRED TO BE PERFORMED BY A CITY'S BUILDING INSPECTOR.

SPECIAL INSPECTIONS AND TESTS

1. THE SPECIAL INSPECTIONS AND TESTS LISTED ARE IN ADDITION TO THE CALLED INSPECTIONS AND TESTS REQUIRED BY CHAPTER 17 OF THE CBC, AS AMENDED. SPECIAL INSPECTION IS NOT A SUBSTITUTE FOR INSPECTION BY A CITY INSPECTOR.
2. CONTINUOUS INSPECTION IS ALWAYS REQUIRED DURING THE PERFORMANCE OF THE WORK UNLESS OTHERWISE SPECIFIED. WHEN WORK IN MORE THAN ONE CATEGORY OF WORK REQUIRING SPECIAL INSPECTION IS TO BE PERFORMED SIMULTANEOUSLY, OR THE GEOGRAPHIC LOCATION OF THE WORK IS SUCH THAT IT CANNOT BE CONTINUOUSLY OBSERVED IN ACCORDANCE WITH THE PROVISIONS OF CBC CHAPTER 17, IT IS THE AGENT'S RESPONSIBILITY TO EMPLOY A SUFFICIENT NUMBER OF INSPECTORS TO ASSURE THAT ALL THE WORK IS INSPECTED IN ACCORDANCE WITH THOSE PROVISIONS.
3. THE SPECIAL INSPECTORS MUST BE CERTIFIED BY THE CITY OF SAN DIEGO TO PERFORM THE TYPE OF INSPECTION SPECIFIED.
4. IT IS THE RESPONSIBILITY OF THE CONTRACTOR TO NOTIFY THE SPECIAL INSPECTOR OR INSPECTION AGENCY AT LEAST ONE WORKING DAY PRIOR TO PERFORMING ANY WORK THAT REQUIRES SPECIAL INSPECTION.
5. SPECIALLY INSPECTED WORK THAT IS INSTALLED OR COVERED WITHOUT THE APPROVAL OF THE CITY INSPECTOR IS SUBJECT TO REMOVAL OR EXPOSURE.
6. THE SPECIAL INSPECTOR SHALL SUBMIT IN WRITING A REPORT OF SPECIAL INSPECTIONS AND TESTS TO THE BUILDING OFFICIAL AND TO THE REGISTERED DESIGN PROFESSIONAL IN RESPONSIBLE CHARGE.
7. THE INSPECTOR SHALL REPORT IN ADVANCE THEIR ASSIGNMENT TO THE CITY OF SAN DIEGO INSPECTION SERVICES DIVISION.
8. A CERTIFICATE OF SATISFACTORY COMPLETION OF WORK REQUIRING SPECIAL INSPECTION MUST BE COMPLETED AND SUBMITTED TO THE INSPECTION SERVICES DIVISION.
11. SPECIAL INSPECTOR SHALL BE HIRED BY THE OWNER (CBC SECTION 1704).
13. REQUIRED VERIFICATION, TESTING, QUALIFICATION AND/OR SPECIAL INSPECTION OF ELEMENTS AND NONSTRUCTURAL COMPONENTS OF BUILDINGS AND STRUCTURES SHALL BE IN ACCORDANCE WITH FOLLOWING:

    A. CONCRETE CONSTRUCTION: CBC SECTION 1705.3 AND TABLE 1705.3.

       1. POST INSTALLED ANCHORS: TABLE 1705.3 INSPECTION 4.
          A. DRILLED IN ANCHORS
          B. ADHESIVE ANCHORS
14. CONTRACTOR OR CONSTRUCTION MANAGER SHALL PROVIDE A WRITTEN STATEMENT ACKNOWLEDGING SPECIAL INSPECTIONS, STATING QUALITY CONTROL PROCEDURES INCLUDING METHOD, FREQUENCY & DISTRIBUTION OF REPORTS. THE STATEMENT SHALL ALSO IDENTIFY INDIVIDUALS EXERCISING CONTROL INCLUDING QUALIFICATIONS AND POSITION IN ORGANIZATION. THIS SHALL BE SUBMITTED PRIOR TO THE START OF WORK.

MLK Recreation Center Moisture Intrusion

S-1.0

AS-BUILT INFORMATION

MATERIALS	MANUFACTURER
-	-
-	-
-	-
-	-

CONSULTANT

MARTIN & LIBBY
STRUCTURAL ENGINEERS
4452 Glacier Avenue, San Diego, CA 92120
Ph (619) 280-9307 F (619) 284-3533

REGISTERED PROFESSIONAL ENGINEER JEAN M. LIBBY No. 6417 Exp. 03-31-23 CIVIL STATE OF CALIFORNIA
07-29-2021

SPEC. NO. 1945

PLANS FOR THE CONSTRUCTION OF
MLK Recreation Center Moisture Intrusion
GENERAL NOTES/
SPECIAL INSPECTION

CITY OF SAN DIEGO, CALIFORNIA
ENGINEERING & CAPITAL PROJECTS DEPARTMENT
SHEET 28 OF 33 SHEETS

WBS B 19001

APPROVED:
FOR CITY ENGINEER — DATE
ELIZABETH SCHROTH-NICHOLS — C-80228
DEPUTY CITY ENGINEER — RCE#

DESCRIPTION	BY	APPROVED	DATE	FILMED
ORIGINAL	RNT			

SUBMITTED BY: DELFA GENOVA, PROJECT MANAGER
CHECKED BY: REZA RASHIDIAN, PROJECT ENGINEER
194-1749 CCS27 COORDINATE
1834-6309 CCS83 COORDINATE
40821-28-D

CONTRACTOR
INSPECTOR
DATE STARTED
DATE COMPLETED

CONSTRUCTION CHANGE / ADDENDUM

CHANGE	DATE	AFFECTED OR ADDED SHEET NUMBERS	APPROVAL NO.

WARNING
0 1
IF THIS BAR DOES NOT MEASURE 1" THEN DRAWING IS NOT TO SCALE.

The City of SAN DIEGO Engineering & Capital Projects

10/11/2019 8:29 AM Y:\CURRENT DWGS\7111.02 MLK Rec Center\7111.02 MLK REC CENTER.dwg

SPECIAL INSPECTIONS AND TESTS (CONTINUED)

REQUIRED VERIFICATION, SPECIAL INSPECTIONS AND TESTS OF CONCRETE CONSTRUCTION
(CBC TABLE 1705.3)

VERIFICATION AND INSPECTION TASK	CONTINUOUS	PERIODIC	REFERENCED STANDARD	IBC REFERENCE
1. INSPECT ANCHORS POST–INSTALLED IN HARDENED CONCRETE MEMBERS.[b]				
a. ADHESIVE ANCHORS INSTALLED IN HORIZONTALLY OR UPWARDLY INCLINED ORIENTATIONS TO RESIST SUSTAINED TENSION LOADS.	X		ACI 318: 17.8.2.4	–
b. MECHANICAL ANCHORS AND ADHESIVE ANCHORS NOT DEFINED IN 4.a.		X	ACI 318: 17.8.2	

b. SPECIFIC REQUIREMENTS FOR SPECIAL INSPECTION SHALL BE INCLUDED IN THE RESEARCH REPORT FOR THE ANCHOR ISSUED BY AN APPROVED SOURCE IN ACCORDANCE WITH 17.8.2 IN ACI 318, OR OTHER QUALIFICATION PROCEDURES. WHERE SPECIFIC REQUIREMENTS ARE NOT PROVIDED, SPECIAL INSPECTION REQUIREMENTS SHALL BE SPECIFIED BY THE REGISTERED DESIGN PROFESSIONAL AND SHALL BE APPROVED BY THE BUILDING OFFICIAL PRIOR TO THE COMMENCEMENT OF THE WORK.

STRUCTURAL OBSERVATION

1. STRUCTURAL OBSERVATION SHALL BE PROVIDED BY THE ENGINEER OF RECORD FOR THE FOLLOWING ITEMS:

   A. WOOD FRAMING AND SHEAR WALLS.

2. STRUCTURAL OBSERVATION IS REQUIRED IN ADDITION TO CITY AND SPECIAL INSPECTIONS.

3. STRUCTURAL OBSERVATION MEANS THE VISUAL OBSERVATION OF THE STRUCTURAL SYSTEM BY THE ENGINEER OF RECORD, FOR GENERAL CONFORMATION TO THE APPROVED PLANS AND SPECIFICATIONS, AT SIGNIFICANT CONSTRUCTION STAGES FOR THE ITEMS LISTED AND AT COMPLETION OF THE STRUCTURAL SYSTEM. STRUCTURAL OBSERVATION DOES NOT INCLUDE OR WAIVE THE RESPONSIBILITY FOR THE INSPECTIONS REQUIRED BY CHAPTER 17 OR OTHER SECTIONS OF THE CBC.

4. IT IS THE RESPONSIBILITY OF THE CONTRACTOR TO REQUEST STRUCTURAL OBSERVATION BY THE ENGINEER. THE ENGINEER SHALL BE GIVEN A MINIMUM OF 2 WORK DAYS NOTICE BY THE CONTRACTOR PRIOR TO PERFORMING STRUCTURAL OBSERVATION.

ABBREVIATIONS

&	AND
@	AT
A.B.	ANCHOR BOLT
BLK	BLOCK(ING)
B.N.	BOUNDARY NAILING
CBC	CALIFORNIA BUILDING CODE
C.L. (℄)	CENTER LINE
CLR	CLEAR(ANCE)
CNTR	CENTER(ED)
CONC	CONCRETE
CONN	CONNECT(ION)(OR)
CONT	CONTINUOUS
d	PENNY (NAILS)
DIA (ø)	DIAMETER
DIST	DISTANCE
DWG	DRAWING
EA	EACH
EMBED	EMBED(ED)(MENT)
E.N.	EDGE NAILING
EXIST (E)	EXISTING
EXT	EXTERIOR
FDN	FOUNDATION
F.F.	FINISHED FLOOR
FIN	FINISH(ED)
F.N.	FIELD NAILING
F.O.S.	FACE OF STUD
FT	FOOT
FTG	FOOTING
GYP	GYPSUM
HORIZ (H)	HORIZONTAL
I.C.C.	INTERNATIONAL CODE COUNCIL
IN	INCH(ES)
INT	INTERIOR
L	LONG (LENGTH)
MAX	MAXIMUM
MIN	MINIMUM
(N)	NEW
NO (#)	NUMBER
N.T.S.	NOT TO SCALE
O.C.	ON CENTER
PL	PLATE
PLYWD	PLYWOOD
P.T.	PRESSURE TREATED
S.E.O.R.	STRUCTURAL ENGINEER OF RECORD
SHTG	SHEATHING
S.S.	STAINLESS STEEL
STGR	STAGGER(ED)
TYP	TYPICAL
U.O.N.	UNLESS OTHERWISE NOTED
VERT (V)	VERTICAL
W	WIDTH (WIDE)
W/	WITH
W/O	WITHOUT

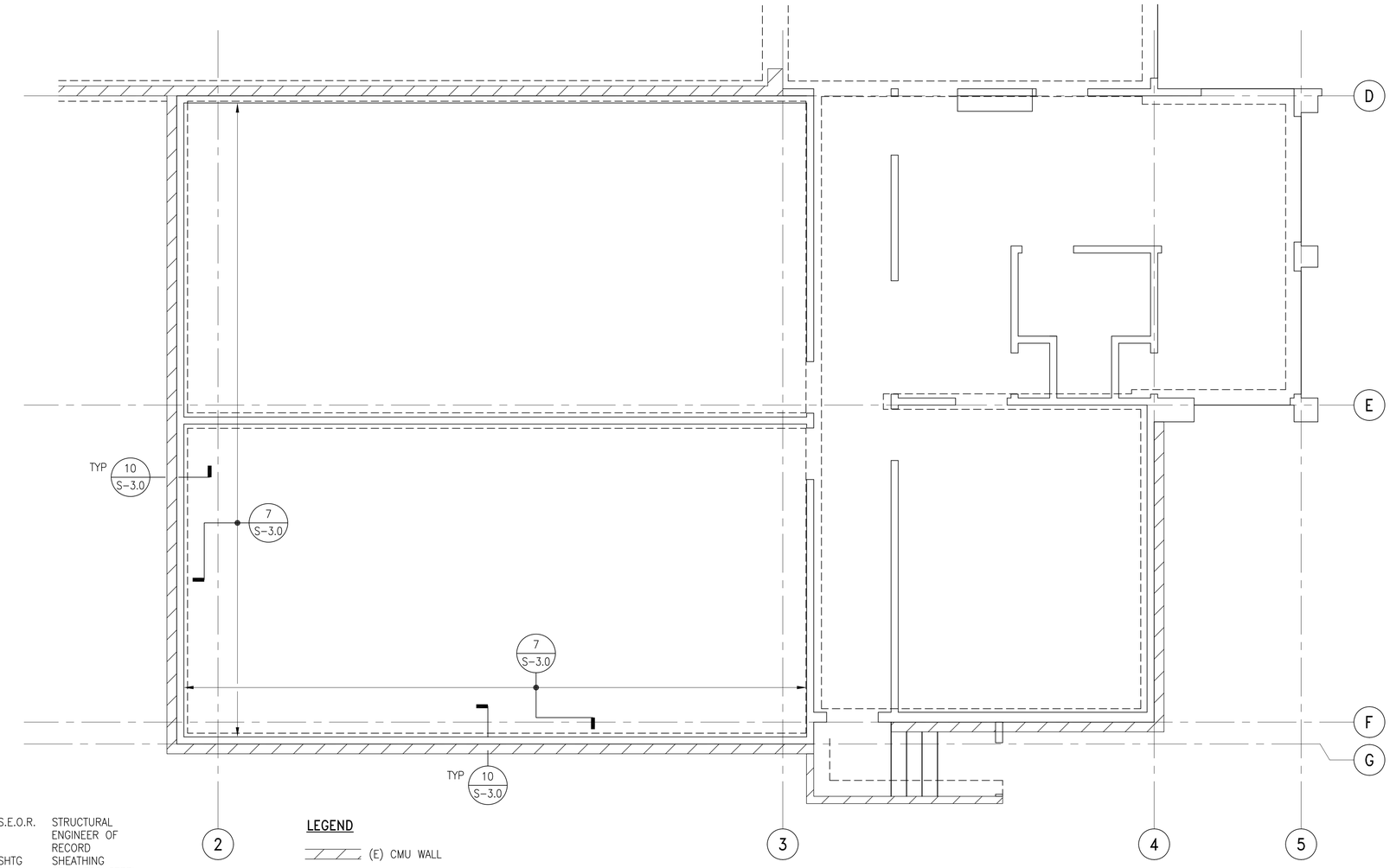

NOTE: SEE A–1.2 FOR EXTENT OF WALL REHABILITATION.

LEGEND

- (E) CMU WALL
- (E) STUD WALL
- (E) FOUNDATION

PARTIAL FOUNDATION/FLOOR PLAN (A)

SCALE: 1/4" = 1'–0"

S-2.0

MLK Recreation Center Moisture Intrusion

AS–BUILT INFORMATION	
MATERIALS	MANUFACTURER
–	–
–	–
–	–
–	–

PLANS FOR THE CONSTRUCTION OF
MLK Recreation Center Moisture Intrusion
FLOOR PLAN

CONSULTANT

SPEC. NO. 1945

CITY OF SAN DIEGO, CALIFORNIA
ENGINEERING & CAPITAL PROJECTS DEPARTMENT
SHEET 29 OF 33 SHEETS

WBS B 19001

APPROVED:
FOR CITY ENGINEER — DATE
ELIZABETH SCHROTH-NICHOLS — C-80228
DEPUTY CITY ENGINEER — RCE#

DESCRIPTION	BY	APPROVED	DATE	FILMED
ORIGINAL	RNT			

SUBMITTED BY: DELFA GENOVA, PROJECT MANAGER
CHECKED BY: REZA RASHIDIAN, PROJECT ENGINEER
194-1749 CCS27 COORDINATE
1834-6309 CCS83 COORDINATE
4082I-29-D

MARTIN & LIBBY
STRUCTURAL ENGINEERS
4452 Glacier Avenue, San Diego, CA 92120
Ph (619) 280–9307 F (619) 284–3533

REGISTERED PROFESSIONAL ENGINEER JEAN M. LIBBY No. 6412 Exp. 03-31-23 CIVIL STATE OF CALIFORNIA
07-29-2021

CONTRACTOR
INSPECTOR
DATE STARTED
DATE COMPLETED

CONSTRUCTION CHANGE / ADDENDUM

CHANGE	DATE	AFFECTED OR ADDED SHEET NUMBERS	APPROVAL NO.

WARNING
0 1
IF THIS BAR DOES NOT MEASURE 1" THEN DRAWING IS NOT TO SCALE.

The City of SAN DIEGO Engineering & Capital Projects

Y:\CURRENT DWGS\7111.02 MLK Rec Center\7111.02 MLK REC CENTER.dwg
10/11/2019 8:29 AM

WHERE SILL PL IS DRILLED OR NOTCHED MORE THAN 1/3 THE PL WIDTH, INSTALL ONE BOLT EA SIDE OF NOTCH

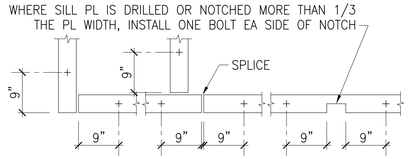

FOR ANCHOR BOLT SIZE AND SPCG FOR HOLDOWNS, SEE FDN PLAN. MIN SILL BOLTS 5/8"ø @ 6'-0" MAX O.C. EMBEDDED A MIN OF 7". BOLTS SHALL BE FITTED WITH 3" SQ x 0.229" WASHERS AND TIGHTENED WITH A WRENCH.

BOLT PLAN

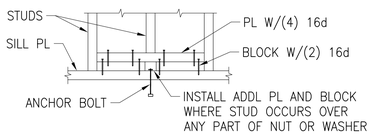

STUD OVER SILL PLATE ANCHOR BOLT (1)
SCALE: 3/4" = 1'-0"

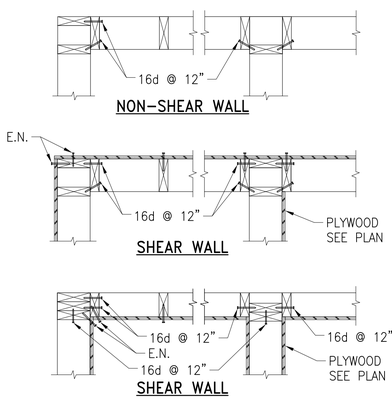

STUD WALL INTERSECTIONS (6)
SCALE: NONE

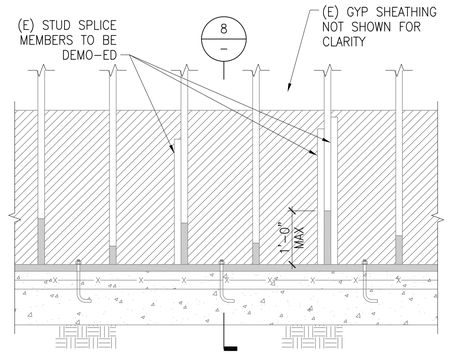

1. SHORE (E) ROOF FRAMING PRIOR TO BEGINNING WORK.
2. REMOVE (E) STUD SPLICE MEMBERS.
3. (E) STUDS ARE WATER/TERMITE DAMAGED. CUT & REMOVE ROTTED WOOD STUD END, UP TO 12". IF MORE THAN 12" OF END OF STUD IS DAMAGED, CONTACT S.E.O.R. FOR REPAIR NEEDS.
4. (E) SILL PLATE IS ROTTED THROUGHOUT. REMOVE (E) SILL PLATE COMPLETELY.
5. (E) SILL A.B. (SPACED ±32" O.C.) ARE ROTTED/RUSTED BEYOND REPAIR. ABRASIVELY CUT & REMOVE (E) A.B. FLUSH TO F.F. AND TREAT EXPOSED SURFACE W/CORROSION INHIBITING AGENT.
6. SEE DETAIL (3) FOR "DEMO-ED" CONDITION.
7. SEE DETAIL (9) FOR "REPAIRED" CONDITION.

(E) BEARING/SHEAR WALL ELEVATION (7)
SCALE: 3/4" = 1'-0"

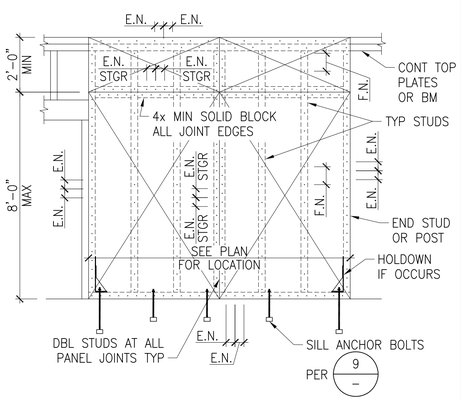

PLYWOOD SHEAR WALL (11)
SCALE: NONE

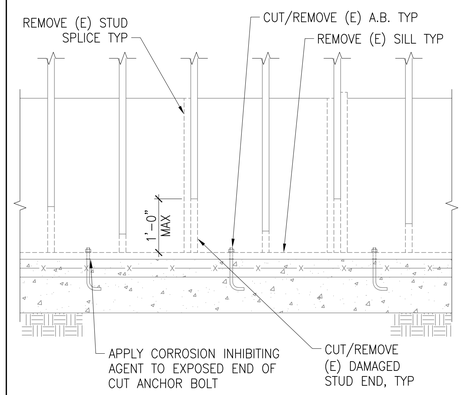

AS DEMO-ED WALL ELEVATION (3)
SCALE: 3/4" = 1'-0"

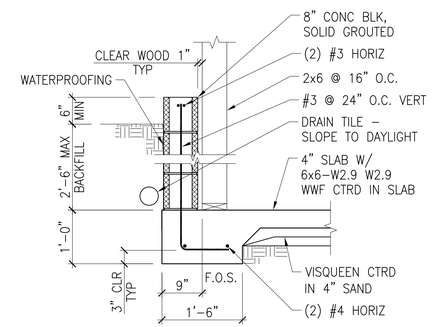

SECTION AT (E) WALL (PROVIDED FOR REFERENCE ONLY) (8)
SCALE: 3/4" = 1'-0"

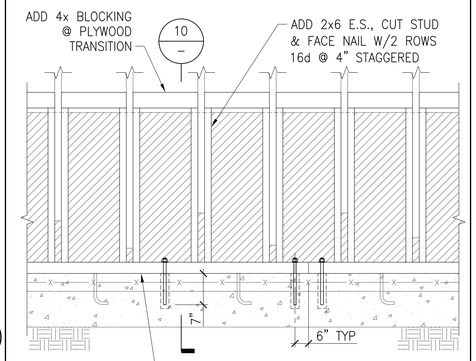

NOTE: PLYWOOD SHEATHING NOT SHOWN FOR CLARITY SEE (10 –) FOR PLYWOOD SHEARWALL REQUIREMENTS.

REPAIRED WALL ELEVATION (9)
SCALE: 3/4" = 1'-0"

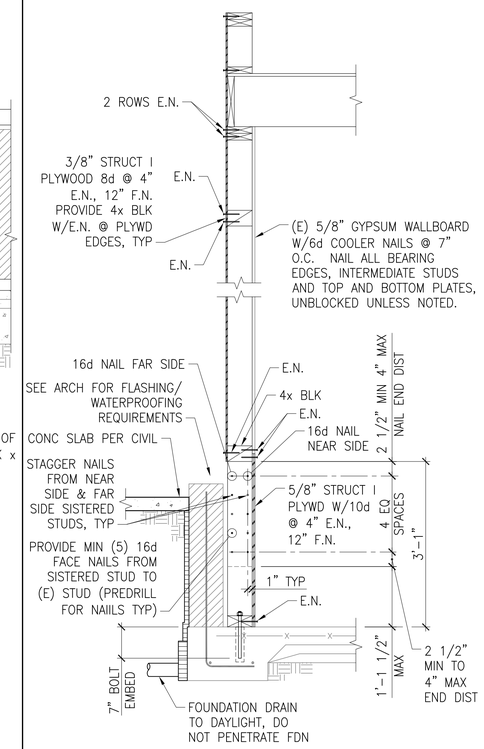

REPAIRED WALL SECTION (10)
SCALE: 3/4" = 1'-0"

MLK Recreation Center Moisture Intrusion

S-3.0

AS-BUILT INFORMATION	
MATERIALS	MANUFACTURER
–	–
–	–
–	–
–	–

PLANS FOR THE CONSTRUCTION OF
MLK Recreation Center Moisture Intrusion
ELEVATIONS/DETAILS

CONSULTANT

SPEC. NO. 1945

CITY OF SAN DIEGO, CALIFORNIA
ENGINEERING & CAPITAL PROJECTS DEPARTMENT
SHEET 30 OF 33 SHEETS

WBS B 19001

APPROVED:
FOR CITY ENGINEER — DATE
ELIZABETH SCHROTH-NICHOLS — C-80228
DEPUTY CITY ENGINEER — RCE#

SUBMITTED BY: DELFA GENOVA, PROJECT MANAGER
CHECKED BY: REZA RASHIDIAN, PROJECT ENGINEER

DESCRIPTION	BY	APPROVED	DATE	FILMED
ORIGINAL	RNT			

194-1749 CCS27 COORDINATE
1834-6309 CCS83 COORDINATE

CONTRACTOR — DATE STARTED
INSPECTOR — DATE COMPLETED

40821-30-D

CONSTRUCTION CHANGE / ADDENDUM

CHANGE	DATE	AFFECTED OR ADDED SHEET NUMBERS	APPROVAL NO.

WARNING
0 1
IF THIS BAR DOES NOT MEASURE 1" THEN DRAWING IS NOT TO SCALE.

The City of SAN DIEGO — Engineering & Capital Projects

MARTIN & LIBBY
STRUCTURAL ENGINEERS
4452 Glacier Avenue, San Diego, CA 92120
Ph (619) 280-9307 F (619) 284-3533

REGISTERED PROFESSIONAL ENGINEER JEAN M. LIBBY No. S412 Exp. 03-31-23 CIVIL STATE OF CALIFORNIA
07-29-2021

10/11/2019 8:29 AM Y:\CURRENT DWGS\7111.02 MLK Rec Center\7111.02 MLK REC CENTER.dwg

ELECTRICAL SYMBOLS

GENERAL SYMBOLS

- DASHED SYMBOL INDICATES EXISTING FIXTURE, DEVICE, OUTLET OR EQUIPMENT TO REMAIN.
- SOLID SYMBOL INDICATES NEW FIXTURE, DEVICE, OUTLET.
- DASHED SYMBOL WITH HATCH INDICATES FIXTURE, DEVICE, OUTLET OR EQUIPMENT TO BE DEMOLISHED.
- (1) DEMOLITION KEY NOTE REFERENCE
- # KEY NOTE REFERENCE
- 3/E39 DETAIL OR SECTION REFERENCES IN NOTES.

BUILDING WIRING & RACEWAY SYSTEMS

- WIRING OR CONDUIT
- SURFACE FLUSH PANELBOARD.
- GROUNDING ELECTRODE
- CONDUIT TURNING DOWN.
- CONDUIT TURNING UP.
- NON FUSED SAFETY DISCONNECT SWITCH.
- J JUNCTION OR OUTLET BOX. CEILING OR WALL MOUNTED AS INDICATED. LOCATE ABOVE ACCESSIBLE CEILINGS UON.

DISCONNECT AND OVERCURRENT DEVICES

CIRCUIT BREAKER		SAFETY SWITCHES	
NUMBERS OF POLES	3	NUMBERS OF POLES	3
TRIP (AMPERES)	*	FUSE SIZE (AMPS)	*
FRAME (AMPERES)	100	RATING (AMPERES)	100
I.C. (1000 AMPS)	10	FUSE CLASS (UL)	RK5

- * "NA" INDICATES NON-AUTOMATIC C/B
- * "NF" INDICATES NON-FUSED SWITCH
- * "50" INDICATES TRIP OR FUSE SIZE
- * "**" INDICATES FUSE SIZE PER MANUFACTURER'S RECOMMENDATION

ABBREVIATIONS:

A OR AMP	AMPERE	KW	KILOWATT
AIC	AMPS INTERRUPTING CAPACITY	MAX	MAXIMUM
C	CONDUIT	NEMA	NATIONAL ELECTRICAL MANUFACTURER ASSOCIATION
CB	CIRCUIT BREAKER		
CKT	CIRCUIT	RMC	RIGID METAL CONDUIT
CU	COPPER	TBD	TO BE DETERMINED
E	ELECTRICAL CONDUIT	TYP.	TYPICAL
(E)	EXISTING	UL	UNDERWRITERS LABORATORY
G	GROUND	UON	UNLESS OTHERWISE NOTED
HZ	HERTZ	V	VOLT
J-BOX OR JB	JUNCTION BOX	VA	VOLT AMPERE
KAIC	THOUSAND AMPS INTERRUPTING CAPACITY	W	WATT OR WIRE
KVA	KILOVOLT AMP	X OR EXIST.	EXISTING (EQUIPMENT)
KV	KILOVOLT		

GENERAL NOTES:

1. THE FOLLOWING GENERAL NOTES APPLY TO ALL ELECTRICAL DRAWINGS.
2. THE CONTRACTOR'S BID AND ALL WORK SHALL COMPLY WITH THE 2016 EDITION OF THE CALIFORNIA ELECTRICAL CODE AND ALL OTHER APPLICABLE FEDERAL, STATE, AND LOCAL CODES. WHERE THE PLANS SHOWN MORE RESTRICTIVE REQUIREMENTS, THE PLANS SHALL GOVERN. HOWEVER, NOTHING ON THESE PLANS SHALL BE INTERPRETED AS AUTHORITY TO VIOLATE ANY CODE OR REGULATION. WHEN REFERENCES ARE MADE TO SPECIFIC CODE SECTIONS, STANDARDS, GUIDES, AND OTHER SIMILAR REFERENCES, THEY ARE INTENDED TO ADD EMPHASIS TO THE REQUIREMENTS OF THAT PARTICULAR REFERENCE AND ARE NOT INTENDED IN ANY WAY TO RELIEVE THE CONTRACTOR OF THE REMAINING REFERENCES.
3. THE CONTRACTOR SHALL VISIT THE SITE INCLUDING ALL AREAS INDICATED ON THE DRAWINGS. HE SHALL THOROUGHLY FAMILIARIZE HIMSELF WITH THE EXISTING CONDITIONS AND BY SUBMITTING A BID ACCEPTS CONDITIONS UNDER WHICH HE SHALL BE REQUIRED TO PERFORM HIS WORK.
4. IT SHALL BE THE ELECTRICAL CONTRACTOR'S RESPONSIBILITY TO OBTAIN A COMPLETE SET OF DRAWINGS. HE SHALL CHECK THE DRAWINGS OF THE OTHER TRADES. FAILURE TO DO SO SHALL NOT RELEASE THE CONTRACTOR FROM DOING THE WORK IN COMPLETE ACCORDANCE WITH THE DRAWINGS.
5. THE CONTRACTOR SHALL SECURE AND PAY FOR ALL PERMITS AND FEES NECESSARY FOR EXECUTION AND COMPLETION OF ELECTRICAL WORK, INCLUDING ALL CHARGES BY THE LOCAL GOVERNMENT AGENCIES.
6. THE CONTRACTOR SHALL COORDINATE HIS WORK WITH OTHER TRADES AT THE SITE. ANY COST TO ROUTE CONDUIT OTHER THAN AS SHOWN ON THE PLANS SHALL BE INCURRED BY THE CONTRACTOR.
7. THE ELECTRICAL DRAWINGS DO NOT SHOW ALL OFFSETS, BENDS, FITTINGS, JUNCTION BOXES, PULL BOXES, AND EXPANSION FITTINGS REQUIRED TO MEET FIELD CONDITIONS. DETERMINE ACTUAL MATERIAL AND HARDWARE REQUIREMENTS AND VERIFY ALL DIMENSIONS, EXISTING EQUIPMENT, AND STRUCTURAL MEMBER LOCATIONS BY FIELD INSPECTION.
8. ALL MATERIALS AND EQUIPMENT SHALL BE UL LISTED AND LABELED AND SHALL BE INSTALLED IN THE MANNER FOR WHICH THEY ARE DESIGNED AND APPROVED.
9. ALL CIRCUIT BREAKERS, FUSES, AND ELECTRICAL EQUIPMENT SHALL HAVE INTERRUPTING RATING NOT LESS THAN THE MAXIMUM SHORT CIRCUIT CURRENT, TO WHICH THEY MAY BE SUBJECTED.
10. UNLESS OTHERWISE NOTED, ALL DEVICES AND EQUIPMENT INSTALLED OUTSIDE OR IN DAMP LOCATIONS SHALL BE WEATHERPROOF WITH MARINE GRADE, CORROSION RESISTANT FINISH. THE FINISH FOR OUTDOOR, WEATHERPROOF, NEMA-3R ENCLOSURES SHALL HAVE ALL COVERS AND DOORS THOROUGHLY CLEANED USING A PHOSPHATE WASH. APPLY A ZINC RICH CORROSION RESISTANT PRIMER AND THEN A POLYESTER POWER COAT SUITABLE FOR MARINE ENVIRONMENT. EXTERIOR SURFACES SHALL BE GIVEN A FINAL FINISH COAT OF ANSI 61 LIGHT GRAY AIR-DRIED ACRYLIC ENAMEL, COVERED WITH A CLEAR POLYURETHANE TOP COAT
11. EXPOSED CONDUIT SHALL BE RIGID GALVANIZED STEEL IN DAMP LOCATIONS OR WHERE SUBJECT TO PHYSICAL ABUSE.
12. CONNECTIONS TO DEVICES SUBJECT TO VIBRATION, SUCH AS MOTORS, TRANSFORMERS, AND SENSORS, SHALL BE SHORT LENGTHS OF LIQUIDTIGHT FLEXIBLE STEEL CONDUIT, TERMINATED WITH APPROVED LIQUIDTIGHT METAL FITTINGS AND PROVIDED WITH A SEPARATE GROUND CONDUCTOR INSTALLED WITH THE PHASE CONDUCTORS.
13. UNLESS NOTED OTHERWISE, ALL WIRE SHALL BE COPPER, UL LISTED, RATED FOR 600 VOLTS, THE THHN/THWN-2 AND #12 AWG MINIMUM SIZE. CONDUCTORS LARGER THAN #10 AWG, CONTROL, INSTRUMENTATION, AND COMMUNICATION CONDUCTORS SHALL BE STRANDED.
14. MINIMUM CONDUIT SIZE SHALL BE 3/4", UNLESS OTHERWISE NOTED.
15. INSTALL ALL EQUIPMENT, LUMINAIRES, DEVICES, CONDUIT AND CONDUIT SUPPORTS TO MEET SEISMIC REQUIREMENTS.
16. CONDUIT RUNS SHOWN ARE DIAGRAMMATIC ONLY. INSTALL ALL CONDUITS AND FITTINGS TO SUIT FIELD CONDITIONS.
17. PROVIDE PROPERLY SIZED LUGS AT ALL CIRCUIT BREAKER PANELS, FOR THE CONDUCTORS SHOWN TO CONNECT TO THESE LUGS.
18. SEPARATE INSULATED EQUIPMENT GROUNDING CONDUCTOR, SIZED PER NEC 250.122, SHALL BE PROVIDED, INSTALLED IN THE SAME CONDUIT AS THE CIRCUIT CONDUCTORS, FOR ALL FEEDER AND BRANCH CIRCUITS.
19. PROVIDE LAMINATED TYPE WRITTEN DIRECTORY CARD IN EACH PANEL. IDENTIFY LOAD SERVED BY EACH CIRCUIT BREAKER. PROVIDE LAMINATED PLASTIC NAMEPLATES TO IDENTIFY ALL LOADS SERVED BY SWITCHGEAR AND DISTRIBUTION PANELS.
20. INSTALL ALL CONDUITS AND WIRES WITH A MINIMUM NUMBER OF BENDS AND IN SUCH A MANNER AS TO CONFORM TO THE STRUCTURE, AVOID OBSTRUCTIONS, PRESERVE HEAD ROOM, AND KEEP OPENINGS AND PASSAGEWAYS CLEAR, AND MEET ALL STRUCTURAL CODE REQUIREMENTS.

MLK Recreation Center Moisture Intrusion

E-0.01

AS-BUILT INFORMATION

MATERIALS	MANUFACTURER
-	-
-	-
-	-
-	-

PLANS FOR THE CONSTRUCTION OF
MLK Recreation Center Moisture Intrusion

SYMBOLS AND GENERAL NOTES

CONSULTANT

SPEC. NO. 1945

CITY OF SAN DIEGO, CALIFORNIA
ENGINEERING & CAPITAL PROJECTS DEPARTMENT
SHEET 31 OF 33 SHEETS

WBS B 19001

APPROVED:
FOR CITY ENGINEER
ELIZABETH SCHROTH-NICHOLS
DEPUTY CITY ENGINEER
DATE
C-80228
RCE#

SUBMITTED BY:
DELFA GENOVA
PROJECT MANAGER
CHECKED BY:
REZA RASHIDIAN
PROJECT ENGINEER

DESCRIPTION	BY	APPROVED	DATE	FILMED
ORIGINAL	BSE			

194-1749
CCS27 COORDINATE

1834-6309
CCS83 COORDINATE

40821-31-D

CONSTRUCTION CHANGE / ADDENDUM

CHANGE	DATE	AFFECTED OR ADDED SHEET NUMBERS	APPROVAL NO.

WARNING
0 1
IF THIS BAR DOES NOT MEASURE 1" THEN DRAWING IS NOT TO SCALE.

The City of SAN DIEGO
Engineering & Capital Projects

BSE ENGINEERING, INC.
10680 TREENA ST., SUITE 100
SAN DIEGO, CA 92131
TEL: 858.800.6000
FAX: 858.800.6001

BSE PROJECT NO. 308-075

REGISTERED PROFESSIONAL ENGINEER
ALAN J. BROWN
No. 13353
Exp. 09-30-22
ELECTRICAL
STATE OF CALIFORNIA
07-29-2021

CONTRACTOR
INSPECTOR
DATE STARTED
DATE COMPLETED

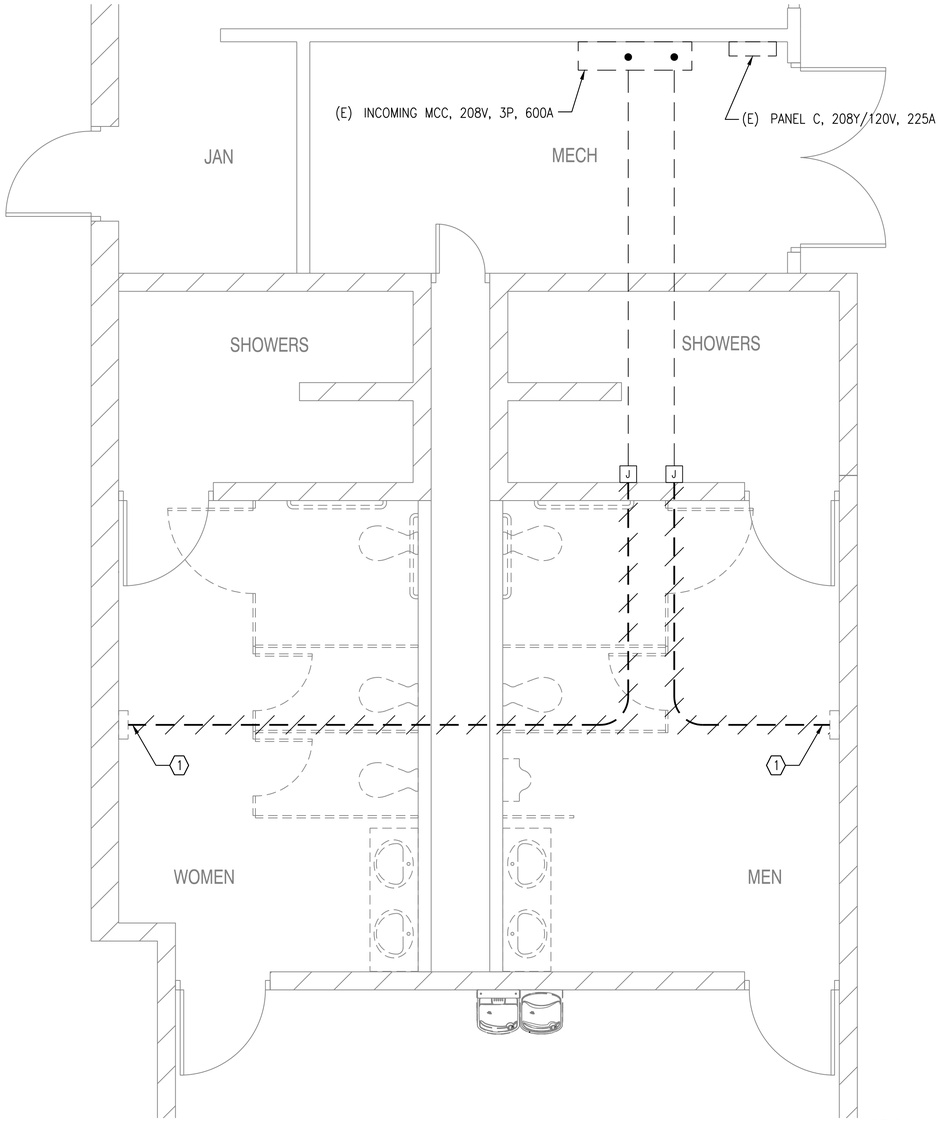

ELECTRICAL FLOOR PLANS - DEMOLITION

SCALE: 3/8" = 1'-0"

PLAN NORTH

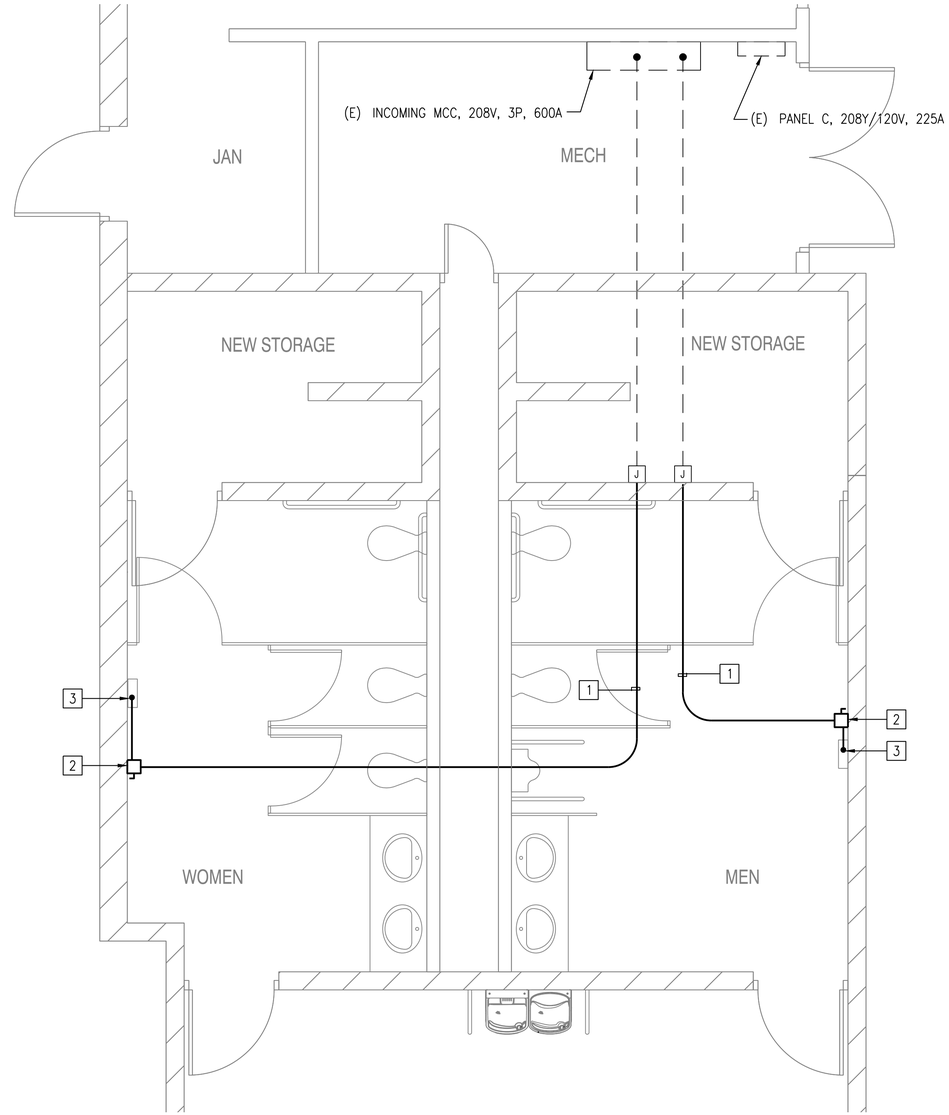

ELECTRICAL FLOOR PLANS - NEW WORK

SCALE: 3/8" = 1'-0"

PLAN NORTH

0 1' 2' 3' 4' 5'

SCALE: 3/8"=1'-0"

DEMOLITION KEYNOTES

1. DEMOLISH WIREMOLD BACK TO JUNCTION BOX. DEMOLISH CIRCUIT WIRING BACK TO INCOMING MCC. 20A CIRCUIT BREAKER WILL BE RE-USED.

KEYNOTES

1. PROVIDE 2#12 AND #12EG IN 3/4" EMT CONDUIT FROM EXISTING 20A CIRCUIT BREAKER IN INCOMING MCC TO DISCONNECT SWITCH.
2. PROVIDE 30A, 240V DISCONNECT SWITCH ABOVE CEILING.
3. PROVIDE 2#12 AND #12EG IN 3/4" RMC FROM DISCONNECT SWITCH DOWN TO HAND DRYER.

MLK Recreation Center Moisture Intrusion

E-3.01

AS-BUILT INFORMATION

MATERIALS	MANUFACTURER
-	-
-	-
-	-
-	-

PLANS FOR THE CONSTRUCTION OF
MLK Recreation Center Moisture Intrusion

ELECTRICAL FLOOR PLANS

CONSULTANT

SPEC. NO. 1945

CITY OF SAN DIEGO, CALIFORNIA
ENGINEERING & CAPITAL PROJECTS DEPARTMENT
SHEET 32 OF 33 SHEETS

WBS B 19001

CONSTRUCTION CHANGE / ADDENDUM

CHANGE	DATE	AFFECTED OR ADDED SHEET NUMBERS	APPROVAL NO.

WARNING

0 1

IF THIS BAR DOES NOT MEASURE 1" THEN DRAWING IS NOT TO SCALE.

The City of SAN DIEGO Engineering & Capital Projects

BSE ENGINEERING, INC.
10680 TREENA ST., SUITE 100
SAN DIEGO, CA 92131
TEL: 858.800.6000
FAX: 858.800.6001

BSE PROJECT NO. 308-075

REGISTERED PROFESSIONAL ENGINEER ALAN J. BROWN No. 13353 Exp. 09-30-22 ELECTRICAL STATE OF CALIFORNIA

07-29-2021

APPROVED:
FOR CITY ENGINEER
ELIZABETH SCHROTH-NICHOLS
DEPUTY CITY ENGINEER
DATE
C-80228
RCE#

DESCRIPTION	BY	APPROVED	DATE	FILMED
ORIGINAL	BSE			

SUBMITTED BY:
DELFA GENOVA
PROJECT MANAGER

CHECKED BY:
REZA RASHIDIAN
PROJECT ENGINEER

194-1749
CCS27 COORDINATE

1834-6309
CCS83 COORDINATE

CONTRACTOR
INSPECTOR
DATE STARTED
DATE COMPLETED

40821-32-D

PLUMBING FIXTURE SCHEDULE

SYMBOL	FIXTURE	MANUFACTURER/MODEL	ROUGH-IN					VALVE/FAUCET TYPE					DESCRIPTION
			HW	CW	W	TRAP	V	MANUAL	PUSH BUTTON	BATTERY	ELECTRIC 110V	FLOW	
WC 1	WATER CLOSET	WATER CLOSET SHALL BE AMERICAN STANDARD #3353.101 FLUSH VALVE SHALL BE SLOAN ROYAL 952 OR APPROVED EQUAL.	--	1"	4"	INT.	2"		X			1.28 GPF	WALL MOUNTED, CONCEALED HYDRAULIC, FLUSH VALVE WITH 3" PUSH BUTTON.
L 1	LAVATORY	LAVATORY SHALL BE AMERICAN STANDARD #0491.019 FAUCET SHALL BE CHICAGO #3400-ABCP OR APPROVED EQUAL.	1/2"	1/2"	1 1/2"	1 1/2"	1 1/2"	X				0.50 GPM	COUNTERTOP LAVATORY, MANUAL OPERATED FAUCET PROVIDE WITH THERMOSTATIC MIXING VALVE, ASSE 1070, ACCESSIBLE

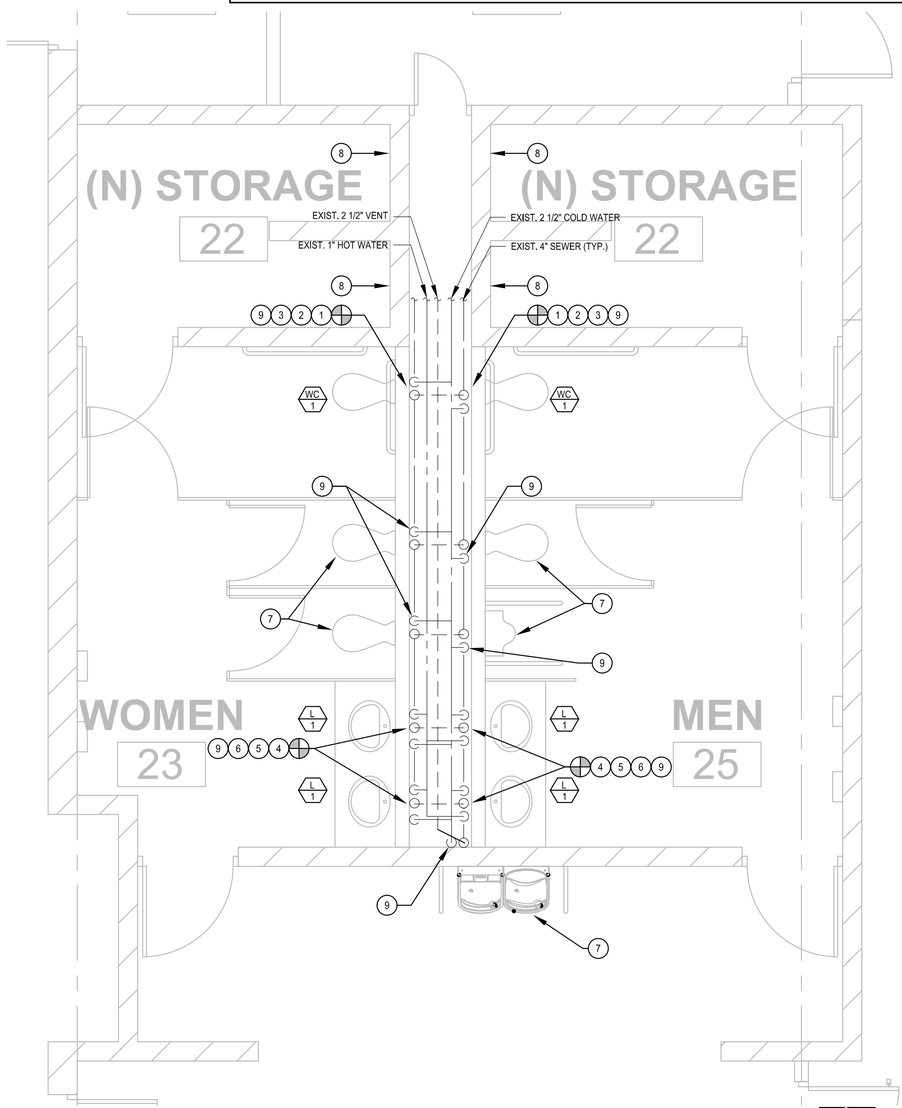

1 ENLARGED PLUMBING FLOOR PLAN
3/8" = 1' - 0"

0' 4' 8' 16'
GRAPHIC SCALE: 3/8" = 1' - 0"

NORTH

PIPE MATERIAL

1. WATER ABOVE GRADE: COPPER TYPE "L" HARD DRAWN WITH WROUGHT COPPER SOLDER JOINT FITTINGS.
2. WATER BELOW GRADE: COPPER TYPE "K" WITH WROUGHT COPPER BRAZED JOINT FITTINGS IN POLYETHYLENE WRAP.
3. SOIL/WASTE AND VENT ABOVE GRADE: HUBLESS CAST IRON PIPE AND FITTINGS.
4. SOIL/WASTE AND VENT BELOW GRADE: POLYVINYL CHLORIDE (PVC) SCHEDULE 40, SOLID - WALL, PIPE AND FITTINGS PER ASTM D2665.
5. BALL VALVES: APOLLO FULL PORT, #70LF - 100 SERIES.

KEY NOTES

1. PROVIDE CLOSET CARRIER. POC 4" SEWER TO EXISTING EXPOSED SEWER AT FLOOR LEVEL.
2. POC 2" VENT TO EXISTING EXPOSED 2" V ABOVE FLOOR.
3. POC 1 1/4" COLD WATER TO EXISTING EXPOSED 1 1/4" CW ABOVE FLOOR.
4. POC 2" WASTE TO EXISTING EXPOSED 2" WASTE AT FLOOR LEVEL.
5. POC 2" VENT TO EXISTING EXPOSED 2" V ABOVE FLOOR.
6. POC 3/4" COLD & HOT WATER TO EXISTING EXPOSED 3/4" COLD & HOT WATER ABOVE FLOOR. PROVIDE NEW PIPE INSULATION.
7. EXISTING FIXTURE TO REMAIN.
8. REMOVE EXISTING SHOWER VALVE ASSEMBLY, WASTE, WATER AND VENT PIPING TO BELOW FLOOR, ABOVE CEILING AND IN PIPE CHASE. PATCH FLOOR, WALL AND CEILING AS REQUIRED TO MATCH EXISTING SURFACES.
9. PROVIDE WATER ISOLATION VALVE TO EACH PLUMBING FIXTURE.

GENERAL NOTES

A. FOR ADDITIONAL INFORMATION SEE ARCHITECTURAL DRAWINGS.

B. FOR WATER CLOSET INSTALLATION, PROVIDE NEW PLUMBING FIXTURE, PLUMBING CARRIER, PIPING, FITTINGS, VALVES, ETC. TO PROVIDE A COMPLETE SYSTEM.

C. FOR LAVATORY INSTALLATION, PROVIDE NEW PLUMBING FIXTURE, PIPING, FITTINGS, VALVES, ETC. TO PROVIDE A COMPLETE SYSTEM.

D. EACH SELF CLOSING LAVATORY FAUCET SHALL NOT EXCEED A WATER FLOW OF 0.20 GALLONS/CYCLE.

E. BALL VALVES TO BE INSTALLED ON EVERY BRANCH LINE OF HOT AND COLD WATER SYSTEMS WITH STAINLESS STEEL ACCESS PANEL.

F. PROVIDE WATER ISOLATION VALVE TO EACH EXISTING AND NEW FIXTURE AND DRINKING FOUNTAIN.

G. PROVIDE STAINLESS STEEL ACCESS PANEL.

H. CONTRACTOR SHALL VIDEO INSPECTION AND HYDRO-JETT CLEAN ALL SANITARY WASTE LINES BEFORE AND AFTER CONSTRUCTION.

I. ALL HARDWARE TO BE STAINLESS STEEL (ALL THREAD, NUTS, UNI-STRUT, ETC)

J. EACH FIXTURE SHALL HAVE IT'S OWN FULL SIZE CLEAN-OUT WYE ON VENT THEN REDUCE VENT AS NEEDED.

MLK Recreation Center Moisture Intrusion

P - 3.0

AS-BUILT INFORMATION

MATERIALS	MANUFACTURER
–	–
–	–
–	–
–	–

PLANS FOR THE CONSTRUCTION OF
MLK Recreation Center Moisture Intrusion

ENLARGED RESTROOM PLAN

CONSULTANT

MA ENGINEERS
5160 Carroll Canyon Rd, Suite 200
San Diego, California 92121
Consulting Mechanical Engineers
858 200-0030 858 200-0037
www.ma-engr.com

SPEC. NO. 1945

REGISTERED PROFESSIONAL ENGINEER
ROBERT C. CAMPBELL
No. M 025911
EXP. 6-30-23
MECHANICAL
STATE OF CALIFORNIA
07-29-2021

CITY OF SAN DIEGO, CALIFORNIA
ENGINEERING & CAPITAL PROJECTS DEPARTMENT
SHEET 33 OF 33 SHEETS

WBS B 19001

APPROVED:
FOR CITY ENGINEER
ELIZABETH SCHROTH-NICHOLS
DEPUTY CITY ENGINEER
DATE
C-80228
RCE#

SUBMITTED BY:
DELFA GENOVA
PROJECT MANAGER

CHECKED BY:
REZA RASHIDIAN
PROJECT ENGINEER

DESCRIPTION	BY	APPROVED	DATE	FILMED
ORIGINAL	RNT			

194-1749
CCS27 COORDINATE

1834-6309
CCS83 COORDINATE

40821-33-D

CONTRACTOR
INSPECTOR
DATE STARTED
DATE COMPLETED

CONSTRUCTION CHANGE / ADDENDUM

CHANGE	DATE	AFFECTED OR ADDED SHEET NUMBERS	APPROVAL NO.

WARNING
0 1
IF THIS BAR DOES NOT MEASURE 1" THEN DRAWING IS NOT TO SCALE.

The City of SAN DIEGO Engineering & Capital Projects