AS Built's

VALHALLA HIGH SCHOOL
CENTRAL PLANT EQUIPMENT UPGRADE

SHEET INDEX

TITLE SHEETS

1. T-001 TITLE SHEET
2. T-002 GENERAL NOTES, LEGENDS & ABBREVIATIONS
3. T-003 CODE ANALYSIS & EXITING PLAN

ARCHITECTURAL

4. A-001 SITE PLAN
5. A-101 DEMO PLAN
6. A-102 FLOOR PLAN
7. A-103 REFLECTED CEILING PLAN
8. A-104 ROOF PLAN
9. A-201 EXTERIOR ELEVATIONS
10. A-202 EXTERIOR ELEVATIONS
11. A-203 INTERIOR ELEVATION
12. A-301 SECTION
13. A-501 WALL TYPES & DETAILS
14. A-502 DETAILS
15. A-601 SCHEDULES

STRUCTURAL

16. S10 GENERAL NOTES
17. S11 GENERAL NOTES
18. S20 MECHANICAL ROOM PLAN & DETAILS
19. S21 DETAILS

MECHANICAL

20. M-001 MECHANICAL LEGEND AND GENERAL NOTES
21. M-002 MECHANICAL SCHEDULES
22. M-003 MECHANICAL SCHEDULES
23. M-101 MECHANICAL - DEMOLITION FLOOR PLAN
24. M-102 MECHANICAL - DEMOLITION ROOF PLAN
25. M-201 MECHANICAL - FLOOR PLAN
26. M-202 MECHANICAL - ROOF PLAN
27. M-301 MECHANICAL SECTIONS
28. M-501 MECHANICAL DETAILS
29. M-502 MECHANICAL DETAILS
30. M-503 MECHANICAL DETAILS
31. M-601 MECHANICAL CONTROLS
32. M-602 MECHANICAL CONTROLS
33. M-603 MECHANICAL CONTROLS
34. M-701 MECHANICAL PIPING DIAGRAMS
35. M-702 MECHANICAL PIPING DIAGRAMS
36. M-801 MECHANICAL TITLE-24 DOCUMENTATION

PLUMBING

37. P-001 PLUMBING LEGEND AND GENERAL NOTES
38. P-002 PLUMBING SCHEDULES
39. P-101 PLUMBING - DEMOLITION FLOOR PLAN
40. P-201 PLUMBING - FLOOR PLAN
41. P-501 PLUMBING DETAILS
42. P-502 PLUMBING DIAGRAMS

ELECTRICAL

43. E-001 ELECTRICAL LEGEND AND GENERAL NOTES
44. E-002 FIXTURE SCHEDULE
45. E-003 TITLE 24
46. E-004 TITLE 24
47. E-101 ELECTRICAL - DEMOLITION FLOOR PLAN
48. E-201 ELECTRICAL - LIGHTING FLOOR PLAN
49. E-202 ELECTRICAL - POWER FLOOR PLAN
50. E-501 SINGLE LINE - DEMOLITION
51. E-502 SINGLE LINE - NEW
52. E-601 PANEL SCHEDULES
53. EF-001 FIRE ALARM LEGEND AND GENERAL NOTES
54. EF-002 FIRE ALARM RISER AND LOAD CALCULATIONS
55. EF-101 FIRE ALARM - DEMOLITION FLOOR PLAN
56. EF-201 FIRE ALARM - FLOOR PLAN

PROJECT SCOPE

BOILER/CHILLER/COOLING TOWER REPLACEMENT: WORK INCLUDES REPLACEMENT OF EXISTING BOILER, CHILLER AND COOLING TOWER AND ADDITION OF SEPARATION WALL BETWEEN BOILER AND OTHER EQUIPMENT. ALL WORK SHALL BE WITHIN THE EXISTING CENTRAL PLANT STRUCTURE.

PROJECT DIRECTORY

CLIENT:
GROSSMONT UNIFIED HIGH SCHOOL DISTRICT
P.O. BOX 1043
LA MESA, CALIFORNIA, 91944
PH: 619-644-8000

ARCHITECT:
PLATT/WHITELAW ARCHITECTS, INC.
4094 30TH STREET
SAN DIEGO, CA 92104
PH: 619-456-4326
FX: 619-546-4350
ALISON M. WHITELAW, FAIA - AOR

STRUCTURAL ENGINEER:
SDSE
3858 CAMINO DEL RIO NORTH, STE. 110
SAN DIEGO, CA 92108
PH: 619-241-2223
FX: 619-241-4415
DANIEL P. KORNTVED, PE - EOR

MECHANICAL/PLUMBING ENGINEER:
TURPIN & RATTAN ENGINEERING, INC.
4714 PALM AVENUE
LA MESA, CA 91941
PH: 619-466-6224
FX: 619-466-6233
CESAR RODRIGUEZ, PE - EOR

ELECTRICAL ENGINEER:
TURPIN & RATTAN ENGINEERING, INC.
4714 PALM AVENUE
LA MESA, CA 91941
PH: 619-466-6224
FX: 619-466-6233
MARIE R. LAKEY, PE - EOR

VICINITY MAP

NO SCALE

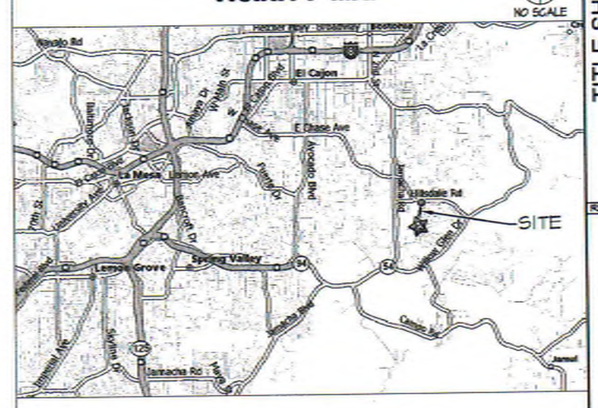

PROJECT ADDRESS

VALHALLA HIGH SCHOOL
1725 HILLSDALE ROAD
EL CAJON, CA 92109
LAT: 32.760724 LONG: -116.92165

PREPARED FOR THE
GROSSMONT UNION HIGH SCHOOL DISTRICT
P.O.BOX 1043
LA MESA, CALIFORNIA

PREPARED BY
PLATT/WHITELAW ARCHITECTS, INC.
4094 30TH STREET
SAN DIEGO, CA (619)546-4326 FAX (619)546-4350

CONSTRUCTION STAMP
DIVISION OF THE STATE ARCHITECT
04-115930
FILE 19144
AO. FLC 08
DATE 04 27 17
FLI: EP&B-A 9/8

TITLE SHEET
CENTRAL PLANT EQUIPMENT UPGRADE
VALHALLA HIGH SCHOOL
1725 HILLSDALE ROAD
EL CAJON, CA 92019

REVISION	DATE

PROJECT NO. PHA R0561.10
FILE NAME: T-001.DWG
DATE: 4/14/2017
DRAWN: -
CHECKED: -

T-001

SHEET NO. - OF - SHEETS

J:\2081.10 Valhalla Central Plant\25-Drawings\Central Plant\phase1\T-001.dwg 04/19/2017 11:15

ABBREVIATIONS

@	AT
A#	DSA APPLICATION NUMBER
A.B.	ANCHOR BOLT
A.C.	ASPHALT CONCRETE
A.COMP.	ASPHALT COMPOSITION
A.C.T.	ACOUSTICAL TILE
ADD'L	ADDITIONAL
A.F.F.	ABOVE FINISH FLOOR
ALT	ALTERNATE
ALUM	ALUMINUM
APPL	APPLICATION
ARCH'L	ARCHITECTURAL
ASPH	ASPHALT
BD	BOARD
BLDG	BUILDING
B.O.B.	BOTTOM OF BEAM
BOT	BOTTOM
BM	BEAM
B.M.	BENCH MARK
CLK'G	CAULKING
C.B.	CATCH BASIN
CBC	CALIFORNIA BUILDING CODE
CEM	CEMENT
CHN'L	CHANNEL
C.I.	CAST IRON
C.I.P.	CAST IN PLACE
C.J.	CONTROL JOINT
(℄) / C.L.	CENTER LINE
CLG	CEILING
CLR	CLEAR
C.M.U.	CONCRETE MASONRY UNIT
COL	COLUMN
CONC	CONCRETE
CONT	CONTINUOUS
CPT	CARPET
CTR	CENTER
CUB	CUBICLE
DBL	DOUBLE
DET	DETAIL
D.F.	DRINKING FOUNTAIN
D.H.	DOUBLE HUNG
D.G.	DECOMPOSED GRANITE
DG. FIR	DOUGLAS FIR
(Φ) / DIA	DIAMETER
DMG	DAMAGE
DR	DOOR
DS	DOWNSPOUT
DWG	DRAWING
E	TACTILE "EXIT" SIGN
(E)	EXISTING
EA	EACH
E.C.P.	EXTERIOR CEMENT PLASTER
E.J.	EXPANSION JOINT
EL	ELEVATION
ELEC	ELECTRICAL
ELEV	ELEVATOR
EQ	EQUAL
E.R.	TACTILE "EXIT ROUTE" SIGN
E.S.	EACH SIDE
EXH'ST	EXHAUST
EXP	EXPOSED
E.J.	EXPANSION JOINT
F/	FROM
FB	FIBERGLASS
F.D.	FLOOR DRAIN
F.E.C.	FIRE EXTINGUISHER CABINET
F.F.	FINISHED FLOOR
F.H.	FIRE HYDRANT
F.H.C	FIRE HOSE CABINET
FIN	FINISH
FLASH'G	FLASHING
FLUOR	FLUORESCENT
FLR	FLOOR
FLR.H.	FLOOR TILE
F.O.B.	FACE OF BUILDING
F.O.C.	FACE OF CONCRETE
F.O.F.	FACE OF FINISH
F.O.M.	FACE OF MASONRY
F.O.P.	FACE OF POST
F.O.S.	FACE OF STUD
FT	FOOT
FTG	FOOTING
FURR'G	FURRING
F.V.	FIELD VERIFY
GA	GAUGE
GRD	GRADE
GEN	GENERAL
G.W.B.	GYPSUM WALL BOARD
GSF	GROSS SQUARE FEET
GYP. BD.	GYPSUM BOARD
HARD'R	HARDENER
H.B.	HOSE BIB
HD	HEAD
HDWR	HARDWARE
HGT	HEIGHT
H.M.	HOLLOW METAL
HORIZ	HORIZONTAL
HR	HOUR
HT	HEIGHT
HW	HARDWOOD
I.D.	INSIDE DIAMETER
INSUL	INSULATION
INT	INTERIOR
JAN	JANITOR
KN	KEYNOTE
LAM	LAMINATE
LAV	LAVATORY
L.F.	LINEAR FEET
L.L.V.	LONG LEG VERTICAL
MACH	MACHINE
MAS	MASONRY
MAT	MATERIAL
MAX	MAXIMUM
M.B.	MACHINE BOLT
MECH	MECHANICAL
MET	METAL
MH	MANHOLE
MIN	MINIMUM
MFR	MANUFACTURER
M.O.	MASONRY OPENING
MR.B.	MARKER BOARD
MTD	MOUNTED
N.I.C.	NOT IN CONTRACT
NO.	NUMBER
NOM	NOMINAL
N.T.S.	NOT TO SCALE
(N)	NEW
O/	OVER
O.C.	ON CENTER
OCC	OCCUPANT/OCCUPANCY
O.H.	OVERALL HEIGHT
O.L.	OCCUPANT LOAD
OPN'G	OPENING
OPP.	OPPOSITE
OPP. H.	OPPOSITE HAND
PC	PIECE
PERF	PERFORATED
PERP.	PERPENDICULAR
PLAS	PLASTIC
P.H.	PANIC HARDWARE
P.L.	PLASTIC LAMINATE
PLT	PLATE
PLYWD	PLYWOOD
P.O.A.	PATH OF TRAVEL (ACCESSIBLE)
P.S.F.	POUNDS PER SQUARE FOOT
P.T.	PRESSURE TREATED
(℄)/P.L.	PROPERTY LINE
P.T.D.	PAPER TOWEL DISPENSER
Q.T.	QUARRY TILE
QTY	QUANTITY
RAD	RADIUS
REINF	REINFORCING
R.C.P.	REFLECTED CEILING PLAN
R.O.	ROUGH OPENING
R.R.	RETURN REGISTER
REQ'D	REQUIRED
S.D.	SOAP DISH
S.F.	SQUARE FEET
SHWR	SHOWER
SHT	SHEET
SHT'G	SHEATHING
SIM	SIMILAR
SMS	SHEET METAL SCREW
SNAC	SUPPLEMENTARY NOTIFICATION APPLIANCE CIRCUIT
SP	SPECIAL
SPC	SPACE
SQ	SQUARE
S.R.	SUPPLY REGISTER
S.S.	SERVICE SINK
STD	STANDARD
STL	STEEL
S.STL.	STAINLESS STEEL
STRUCT	STRUCTURAL
SUSP	SUSPENDED
TEL	TELEPHONE
THK	THICK
THRESH	THRESHOLD
T.O.	TOP OF
T.P.H.	TOILET PAPER HOLDER
TRANS	TRANSVERSE
TLT	TOILET
TYP	TYPICAL
U.N.O.	UNLESS NOTED OTHERWISE
V.A.T.	VINYL ASBESTOS TILE
V.C.T.	VINYL COMPOSITION TILE
VERT	VERTICAL
W/	WITH
W.C.	WATER CLOSET
WD	WOOD; WIDTH
W/O	WITHOUT
WDW	WINDOW
WP	WATERPROOF
W.W.F.	WELDED WIRE FABRIC
W.W.S.	WIRE MESH SCREEN
WS	WOOD SCREW
(L)	ANGLE
([)	CHANNEL
(#)	POUND OR NUMBER
℄	PROPERTY LINE

CHANGES TO THE DOCUMENTS

CHANGES TO THE APPROVED DRAWINGS AND SPECIFICATIONS SHALL BE MADE BY AN ADDENDA OR CONSTRUCTION CHANGE DOCUMENT (CCD) APPROVED BY THE DIVISION OF THE STATE ARCHITECT (DSA), AS REQUIRED BY SECTION 4-338, PART-I, TITLE 24, CCR.

INSPECTOR QUALIFICATION

A "DSA CERTIFIED" PROJECT INSPECTOR EMPLOYED BY THE SCHOOL DISTRICT (OWNER) AND APPROVED BY THE DIVISION OF THE STATE ARCHITECT (DSA) SHALL PROVIDE CONTINUOUS INSPECTION OF THE WORK. THE DUTIES OF THE INSPECTOR ARE DEFINED IN SECTION 4-342, PART I, TITLE 24, CCR. PROJECT INSPECTOR SHALL BE MINIMUM CLASS 3.

PROJECT GOVERNING CODES

THE CONSTRUCTION OF PROJECT SHALL BE IN CONFORMANCE WITH THE CURRENT ADOPTED EDITIONS OF THE FOLLOWING CODES:

2016 BUILDING STANDARDS ADMIN. CODE, PART I, TITLE 24 C.C.R. (CALIFORNIA CODE OF REGULATIONS)
2016 CALIFORNIA BUILDING CODE (CBC), PART 2, TITLE 24 C.C.R.
2016 CALIFORNIA ELECTRICAL CODE (CEC), PART 3, TITLE 24 C.C.R.
2016 CALIFORNIA MECHANICAL CODE (CMC), PART 4, TITLE 24 C.C.R.
2016 CALIFORNIA PLUMBING CODE (CPC), PART 5, TITLE 24 C.C.R.
2016 CALIFORNIA ENERGY CODE (CEC), PART 6, TITLE 24 C.C.R.
2016 CALIFORNIA FIRE CODE (CFC), PART 9, TITLE 24 C.C.R.
2016 CALIFORNIA EXISTING BUILDING CODE, PART 10, TITLE 24, C.C.R.
2016 CALIFORNIA REFERENCED STANDARDS, PART 12, TITLE 24 C.C.R.
2016 PUBLIC SAFETY, STATE FIRE MARSHAL REGULATIONS TITLE 19 C.C.R.,

PARTIAL LIST OF APPLICABLE STANDARDS

NFPA 72, NATIONAL FIRE ALARM CODE (CA AMENDEDMENTS) 2016 EDITION (NOTE: SEE UL STD 1971 FOR "VISUAL DEVICES")
REFERENCE CODE SECTION FOR NFPA STANDARDS- 2016 CBC (SFM) 3504.1

SYMBOLS LEGEND

- DETAIL NUMBER / SHEET NUMBER DETAIL APPEARS
- ELEVATION NUMBER / SHEET NUMBER ELEVATION APPEARS
- SECTION NUMBER / SHEET NUMBER SECTION APPEARS
- GRID LETTER/NUMBER
- ELEVATION HEIGHT / LOCATION OF HEIGHT
- KEYNOTE REFERENCE
- PROVIDE WALL MTD FIRE EXTINGUISHER MOUNT 48" A.F.F. & 2'-0" CLEAR OF DOOR SWING
- (E) EXIT LIGHT TO REMAIN
- EXIT LIGHT
- WALL TYPE
- WALL TYPE NUMBER
- LOUVER SYMBOL / LOUVER LETTER (SEE LOUVER SCHEDULE)
- DOOR SYMBOL / DOOR NUMBER (SEE DOOR SCHEDULE) / PANIC HARDWARE

GENERAL NOTES

1. THE INTENT OF THESE DRAWINGS AND SPECIFICATIONS IS THAT ALL THE WORK OF THE ALTERATION, REHABILITATION OR RECONSTRUCTION IS TO BE IN ACCORDANCE WITH TITLE 24, CALIFORNIA CODE OF REGULATIONS. SHOULD ANY EXISTING CONDITIONS SUCH AS DETERIORATION OR NON-COMPLYING CONSTRUCTION BE DISCOVERED WHICH IS NOT COVERED BY THE CONTRACT DOCUMENTS WHEREIN THE FINISHED WORK WILL NOT COMPLY WITH TITLE 24, CCR, A CONSTRUCTION CHANGE DOCUMENT (CCD), OR A SEPARATE SET OF PLANS AND SPECIFICATIONS, DETAILING AND SPECIFYING THE REQUIRED WORK SHALL BE SUBMITTED TO AND APPROVED BY DSA BEFORE PROCEEDING WITH THE WORK. (SECTION 4-317(c), PART I, TITLE 24, CCR)
2. PENETRATIONS THROUGH STRUCTURAL MEMBERS, FLOOR AND CEILING SLABS AND FIRE-RATED ASSEMBLIES REQUIRE APPROVAL BY THE ARCHITECT AND THE DIVISION OF THE STATE ARCHITECT BEFORE PROCEEDING WITH THE WORK.
3. DIMENSIONS ARE SHOWN TO THE FACE OF FRAMING UNLESS OTHERWISE NOTED OR INDICATED (E.G. CLEAR DIMENSIONS OR DIMENSIONS DRAWN TO CENERLINES.)
4. VERIFY DIMENSIONS IN FIELD. DO NOT SCALE DIMENSIONS FROM DRAWINGS.
5. INFORMATION SHOWN BY ENGINEERING DISCIPLINE DOCUMENTS IS NOT INTENDED TO DEFINE SCOPE OF WORK OF SUBCONTRACTORS. CONTRACTOR SHALL DETERMINE AND COORDINATE THE SCOPES OF WORK OF SUBCONTRACTORS.
6. PROVIDE FIRE SAFETY DURING CONSTRUCTION AND DEMOLITION PER CFC CHAPTER 33.
7. INTERIOR FINISHES SHALL COMPLY WITH CBC, CFC AND TITLE 19.
8. A DSA ACCEPTED TESTING LABORATORY DIRECTLY EMPLOYED BY THE DISTRICT (OWNER) SHALL CONDUCT ALL THE REQUIRED TESTS AND INSPECTIONS FOR THE PROJECT.
9. CONTRACTOR OPERATIONS SHALL NOT BLOCK, HINDER, IMPEDE OR OTHERWISE INHIBIT THE USE OF REQUIRED EXITS AT ANY TIME. CONTRACTOR SHALL MAINTAIN UNOBSTRUCTED ACCESS TO FIRE EXTINGUISHERS, FIRE HYDRANTS, TEMPORARY FIRE PROTECTION FACILITIES, STAIRWAYS AND OTHER ACCESS ROUTES FOR FIRE-FIGHTING EQUIPMENT AND/OR PERSONNEL.

GREEN BUILDING CODE NOTES

DIVISION 5.1 - PLANNING AND DESIGN

1. NO MANDATORY REQUIREMENTS APPLY

DIVISION 5.2 - ENERGY EFFICIENCY

1. SECTION 5.201.1 - SCOPE: BUILDING MEETS OR EXCEEDS THE REQUIREMENTS OF THE CALIFORNIA BUILDING ENERGY EFFICIENCY STANDARDS

DIVISION 5.3 - WATER EFFICIENCY AND CONSERVATION

1. NO MANDATORY REQUIREMENTS APPLY

DIVISION 5.4 - MATERIAL CONSERVATION AND RESOURCE EFFICIENCY

1. SECTION 5.408.1 - CONSTRUCTION WASTE MANAGEMENT: RECYCLE AND/OR SALVAGE FOR REUSE A MINIMUM OF 65% OF THE NON-HAZARDOUS CONSTRUCTION WASTE IN ACCORDANCE WITH SECTION 5.408.1.1, 5.408.1.2 OR 5.408.1.3; OR MEET A LOCAL CONSTRUCTION AND DEMOLITION WASTE MANAGEMENT ORDINANCE, WHICHEVER IS MORE STRINGENT.

DIVISION 5.5 - ENVIRONMENTAL QUALITY

1. SECTION 5.504.4 - FINISH MATERIAL POLLUTANT CONTROL: FINISH MATERIALS SHALL COMPLY WITH SECTIONS 5.504.4.1 THROUGH 5.504.4.6.
2. SECTION 5.508.1 - OZONE DEPLETION AND GLOBAL WARMING REDUCTIONS: INSTALLATIONS OF HVAC, REFRIGERATION AND FIRE SUPPRESSION EQUIPMENT SHALL COMPLY WITH SECTIONS 5.508.1.1 AND 5.508.1.2.

PREPARED FOR THE
GROSSMONT UNION HIGH SCHOOL DISTRICT
P.O.BOX 1043
LA MESA, CALIFORNIA

PREPARED BY
PLATT/WHITELAW ARCHITECTS, INC.
4034 30TH STREET
SAN DIEGO, CA (619)546-4350 FAX (619)546-4350

APPLICATION FOR PERMIT
DIV. OF RECLAMATION SERVICES
04-115930
FILE #01-14
AC. PLAN CHECK
DATE 07/27/17

REGISTERED ARCHITECT

GENERAL NOTES, LEGENDS & ABBREVIATIONS
CENTRAL PLANT EQUIPMENT UPGRADE
VALHALLA HIGH SCHOOL
1725 HILLSDALE ROAD
EL CAJON, CA 92019

REVISION	DATE

PROJECT NO. PNA 10586.1.0
FILE NAME: T-002.DWG
DATE: 4/14/2017 DRAWN: - CHECKED: -

T-002

SHEET NO. - OF - SHEETS

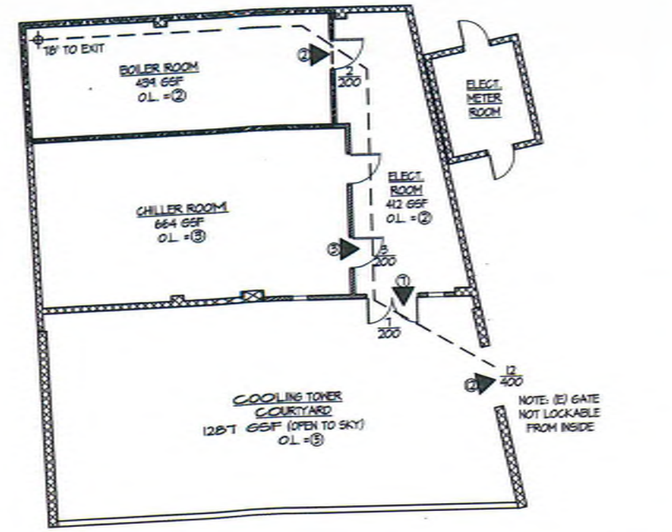

1 EXITING PLAN
1/8" = 1'-0"

PLAN NORTH

ALLOWABLE EXIT WIDTH BASED ON 0.2" EGRESS WIDTH PER OCCUPANT SERVED

LEGEND

- 1-HR. RATED WALL
- EXIT LOAD
- EXIT DOOR
- ACTUAL EXIT LOAD
- ALLOWABLE EXIT LOAD
- MOST REMOTE OCCUPIED POINT WITHIN BUILDING
- MAXIMUM COMMON PATH OF EGRESS

0 4' 8' 16'
SCALE: 1/8" = 1'-0"

CODE ANALYSIS

THE EXISTING STRUCTURE WAS APPROVED BY OFFICE OF STATE ARCHITECT (OSA) IN 1971 AND CERTIFIED IN 1975. THE STRUCTURE CONSISTS OF MASONRY EXTERIOR WALLS WITH A WOOD-FRAMED LOW-SLOPE ROOF.

OCCUPANCY CLASSIFICATION:	S-1
CONSTRUCTION TYPE:	TYPE V-B
FIRE SPRINKLERS:	NO
ACTUAL HEIGHT:	15'-0" (< ALLOWABLE)
ALLOWABLE HEIGHT:	40'-0"
ACTUAL STORIES:	1 (= TO ALLOWABLE)
ALLOWABLE STORIES:	1
ACTUAL AREA:	1,515 GSF (< ALLOWABLE)
ALLOWABLE AREA:	9,000 GSF
FIRE ALARM:	YES

* COOLING TOWER COURTYARD NOT COUNTED IN ACTUAL AREA (THIS IS AN OUTDOOR SPACE AND IS NOT ENCLOSED)

PER CBC 508.2.5:
BOILER ROOM IS CONSIDERED INCIDENTAL ACCESSORY AND CONTAINS BOILERS WHERE THE LARGEST PIECE OF EQUIPMENT IS OVER 15 PSI AND 10 HORSEPOWER. TABLE 508.2.5 REQUIRES MINIMUM 1-HR. SEPARATION FROM THE REMAINDER OF THE BUILDING

PER CBC 1016.2.2, EXCEPTION:
MEANS OF EGRESS ARE NOT PROHIBITED THROUGH ADJOINING OR INTERVENING ROOMS OR SPACES IN GROUP H, S, OR F OCCUPANCY WHERE THE ADJOINING OR INTERVENING ROOMS OR SPACES ARE THE SAME OR LESSER HAZARD OCCUPANCY GROUP.

PER CBC 11B-203.5:
FLOORS NOT CUSTOMARILY OCCUPIED AND FREQUENTED ONLY BY SERVICE PERSONNEL INCLUDING MACHINERY ROOMS ARE NOT REQUIRED TO BE ON AN ACCESSIBLE PATH OF TRAVEL.

PREPARED FOR THE
GROSSMONT UNION HIGH SCHOOL DISTRICT
P.O.BOX 1043
LA MESA, CALIFORNIA

PREPARED BY
PLATT/WHITELAW ARCHITECTS, INC.
4094 30TH STREET
SAN DIEGO, CA (619)546-4326 FAX (619)546-4360

CERTIFICATION STAMP
DSA, OFFICE OF THE STATE ARCHITECT
OFFICE OF REGULATION SERVICES
04-115930
FILE 4TH H
NO. 68
DATE 04/27/17

REGISTERED ARCHITECT
PLATT/WHITELAW
ARCHITECTS, INC.
STATE OF CALIFORNIA

CODE ANALYSIS & EXITING PLAN

CENTRAL PLANT EQUIPMENT UPGRADE

VALHALLA HIGH SCHOOL
1725 HILLSDALE ROAD
EL CAJON, CA 92019

REVISION	DATE

PROJECT NO. PWA #0561.10
T-003 CODE ANALYSIS
FILE NAME: EXITING PLANDWG
DATE: 4/14/2017 DRAWN: - CHECKED: -

T-003

SHEET NO. - OF - SHEETS

J:\0561.10 Valhalla Central Plant\03-Drawings\Central Plant\plansets\T-003 Code Analysis & Exiting Plan.dwg 04/14/2017 07:47

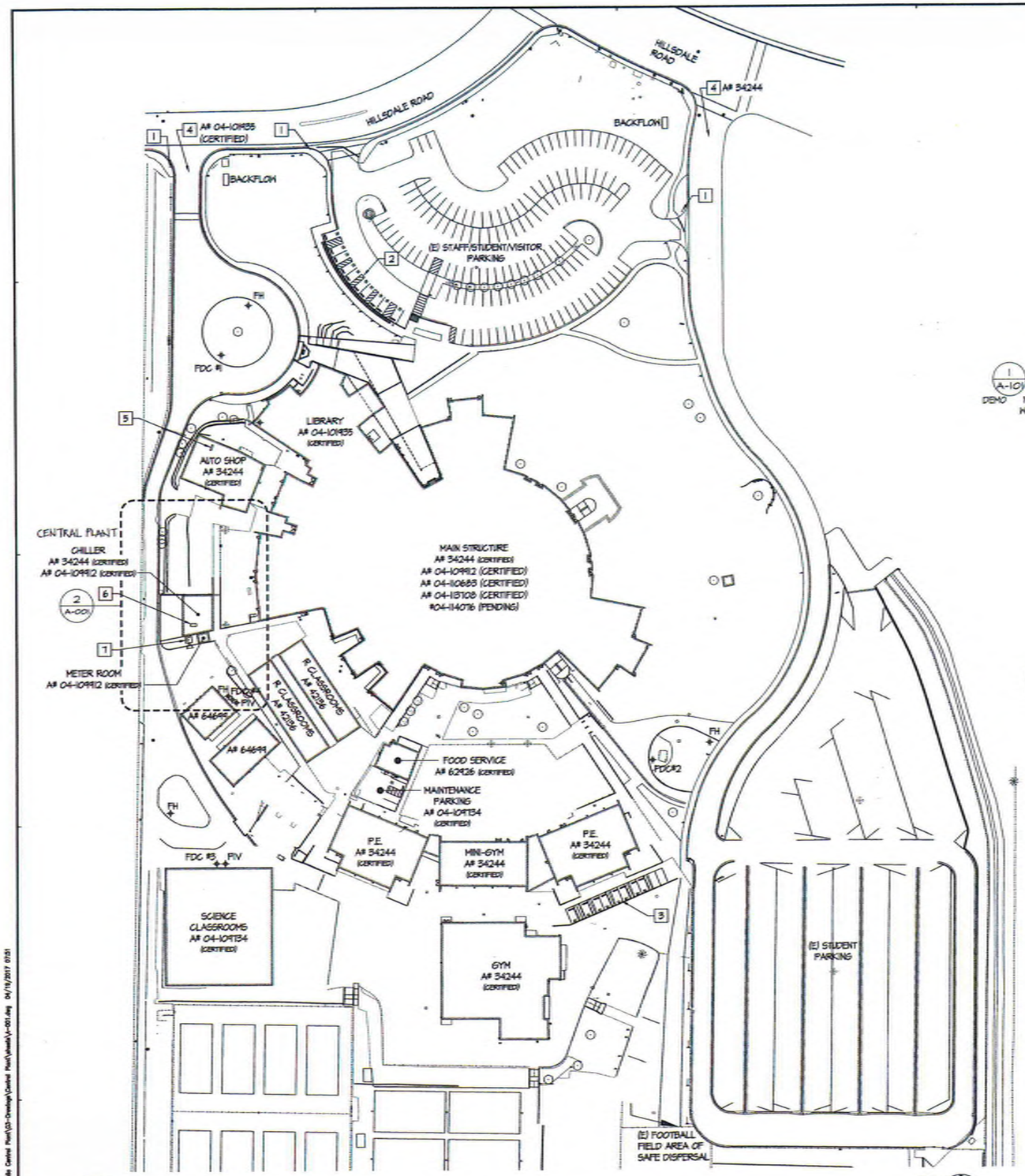

1 SITE PLAN
1" = 60'-0"

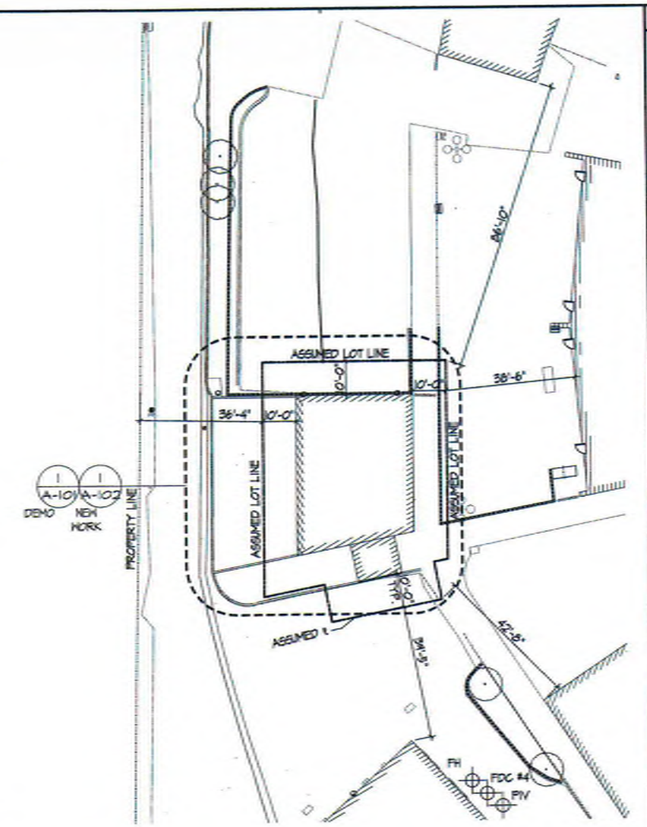

2 ENLARGED SITE PLAN
1" = 20'-0"

KEYNOTES

1. (E) TOW-AWAY SIGN (A# 04-109134 - CERTIFIED)
2. (E) ACCESSIBLE PARKING (A# 04-109912 - CERTIFIED)
3. (E) ACCESSIBLE PARKING (A# 04-109134 - CERTIFIED)
4. (E) 20' WIDE FIRE ACCESS
5. (E) FIRE ALARM CONTROL PANEL (A# 04-109912 - CERTIFIED)
6. SNAC PANEL
7. FIRE ALARM HORN

SCALE: 1" = 60'-0"

PREPARED FOR THE
GROSSMONT UNION HIGH SCHOOL DISTRICT
P.O.BOX 1048
LA MESA, CALIFORNIA

PREPARED BY
PLATT/WHITELAW ARCHITECTS, INC.
4094 30TH STREET
SAN DIEGO, CA (619)546-4326 FAX (619)546-4350

DIVISION OF STATE ARCHITECT
OFFICE OF REGULATION SERVICES
04-115930
FILE 40-H
AD. FLD
DATE 04/27/17

REGISTERED ARCHITECT

SITE PLAN

CENTRAL PLANT EQUIPMENT UPGRADE
VALHALLA HIGH SCHOOL
1725 HILLSDALE ROAD
EL CAJON, CA 92019

REVISION	DATE

PROJECT NO. PWA #0561.10
FILE NAME: A-001.DWG
DATE: 4/14/2017 DRAWN: - CHECKED: -

A-001
SHEET NO. - OF - SHEETS

J:\0561.10 Valhalla Central Plant\CD-Drawings\Central Plant\sheets\A-001.dwg 04/19/2017 07:51

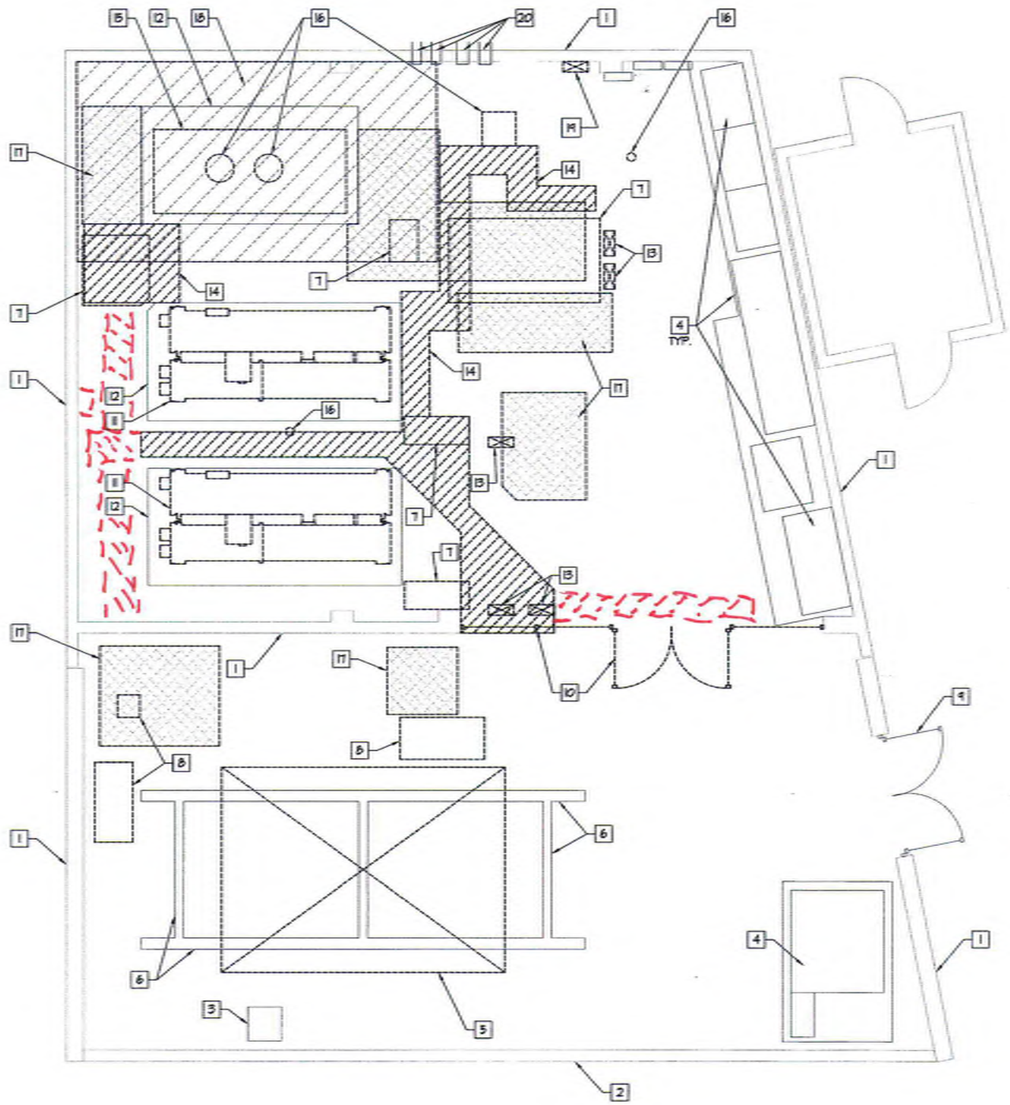

1 **DEMOLITION PLAN**
1/4" = 1'-0"

PLAN NORTH

0 2' 4' 8'
SCALE: 1/4" = 1'-0"

KEYNOTES

1. (E) CMU WALL TO REMAIN
2. (E) CEMENT PLASTER WALL TO REMAIN
3. (E) GAS MAIN REGULATOR TO REMAIN - PROTECT IN PLACE
4. (E) ELECTRICAL EQUIPMENT TO REMAIN - PROTECT IN PLACE
5. REMOVE MECHANICAL COOLING TOWER AND ASSOCIATED PIPING, CONDUIT & CONTROLS INCLUDING ALL SUPPORT STEEL
6. (E) CONCRETE STEM WALLS/FOUNDATIONS TO REMAIN
7. REMOVE MECHANICAL EQUIPMENT, ASSOCIATED PIPING, CONDUIT, CONTROLS AND CONCRETE HOUSEKEEPING PAD - PREPARE (E) SLAB FOR CONCRETE PATCH
8. REMOVE ABANDONED CONCRETE HOUSEKEEPING PAD - PREPARE (E) SLAB FOR CONCRETE PATCH
9. (E) CHAIN LINK GATE TO REMAIN - PROTECT IN PLACE
10. REMOVE CHAIN LINK GATE, FENCE, POSTS AND ALL ASSOCIATED HARDWARE DOWN TO SLAB - PREPARE (E) SLAB, CMU WALLS AND HEADER FOR NEW WORK
11. REMOVE MECHANICAL CHILLER EQUIPMENT AND ALL ASSOCIATED PIPING, CONDUITS AND CONTROLS
12. (E) CONCRETE HOUSEKEEPING PAD TO REMAIN - REMOVE ALL ANCHORS AND PREPARE TO RECEIVE NEW CHILLER
13. REMOVE ELECTRICAL EQUIPMENT AND ALL ASSOCIATED SUPPORTS, CONDUIT AND CONTROLS - SALVAGE EQUIPMENT AND RETURN TO OWNER
14. REMOVE PORTION OF (E) CONCRETE SLAB FOR NEW PLUMBING WORK
15. REMOVE MECHANICAL BOILER EQUIPMENT AND ALL ASSOCIATED FLUES, PIPING, CONDUITS AND CONTROLS
16. REMOVE EQUIPMENT AT (E) THROUGH-ROOF PENETRATION - PREPARE FOR PATCHING
17. ROUGHEN/PREPARE (E) CONCRETE SLAB FOR NEW CONCRETE HOUSEKEEPING PAD
18. REMOVE GYP BD @ CEILING INCLUDING BEAM WRAPS AND RETURNS TO ROOF DECK - 2X4 STRIPPING TO REMAIN
19. REMOVE ELECTRICAL/CONTROLS EQUIPMENT AND ASSOCIATED CONDUIT
20. (E) HYDRONIC SYSTEM THRU-WALL CONNECTIONS TO REMAIN

GENERAL NOTES

1. SEE TECHNICAL HAZARDOUS MATERIAL BUILDING ABATEMENT SPECIFICATIONS (ABATEMENT SPECS) REGARDING REQUIREMENTS FOR TREATMENT OF KNOWN AND SUSPECTED HAZMAT.
2. COORDINATE ITEMS TO BE DEMOLISHED AND REMOVED & REINSTALLED ACROSS ALL DISCIPLINES PRIOR TO COMMENCEMENT OF WORK.
3. KEYNOTES PROVIDE ADDITIONAL INFORMATION AND CLARIFICATION OF THE GENERAL NOTES, BUT DO NOT CALL OUT EVERY ITEM TO BE REMOVED.
4. CONTRACTOR SHALL VISIT SITE PRIOR TO BID TO ESTABLISH FULL SCOPE OF DEMOLITION.
5. REMOVE ALL ANCHORAGE, SUPPORTS AND SIMILAR ITEMS ASSOCIATED WITH ITEMS TO BE REMOVED OR SALVAGED

DEMO LEGEND

- DEMOLISH (E) GYP. BD. CEILING
- DEMOLISH (E) CONCRETE SLAB
- DEMOLISH (E) CONSTRUCTION
- REMOVE & SALVAGE (E) EQUIPMENT
- ROUGHEN/PREPARE (E) CONCRETE SLAB FOR NEW CONCRETE HOUSEKEEPING PAD

PREPARED FOR THE
GROSSMONT UNION HIGH SCHOOL DISTRICT
P.O.BOX 1043
LA MESA, CALIFORNIA

PREPARED BY
PLATT/WHITELAW ARCHITECTS, INC.
4094 30TH STREET
SAN DIEGO, CA (619)546-4326 FAX (619)546-4350

CONSTRUCTION WORK
DIV. OF THE STATE ARCHITECT
OFFICE OF REGULATION SERVICES
04-115930
FILE 42144
AD. RB DD. DAD
DATE 012717

DEMO PLAN
CENTRAL PLANT EQUIPMENT UPGRADE
VALHALLA HIGH SCHOOL
1725 HILLSDALE ROAD
EL CAJON, CA 92019

REVISION	DATE

PROJECT NO. PWA #056130
FILE NAME: A-101.DWG
DATE: 4/14/2011 DRAWN: - CHECKED: -

A-101

SHEET NO. - OF - SHEETS

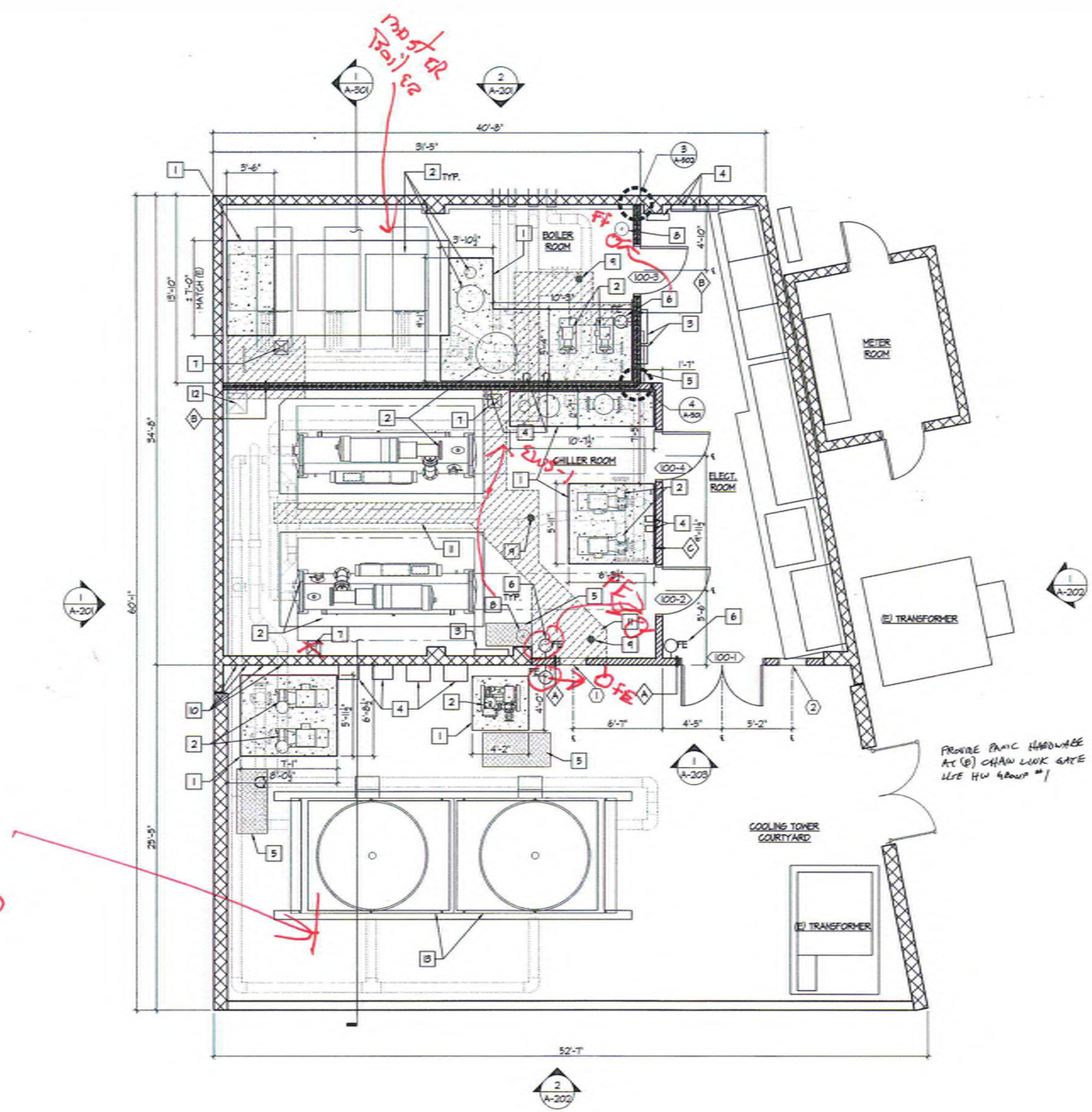

1 FLOOR PLAN
1/4" = 1'-0"

KEYNOTES

1. 6" HIGH CONCRETE PAD - MATCH HEIGHT OF (E) WHERE ADJOINING TO (E) - COORDINATE SIZE AND LOCATION OF PADS W/ EQUIPMENT REQUIREMENTS
2. MECHANICAL EQUIPMENT PER M-201 ON CONCRETE PAD
3. MECHANICAL CONTROLS EQUIPMENT PER M-201 - PROVIDE BACKING AT STUD WALLS PER 4/5.2.0
4. ELECTRICAL EQUIPMENT PER M-201 & E-202 - PROVIDE BACKING AT STUD WALLS PER 4/5.2.0 WHERE APPLICABLE
5. PATCH (E) CONCRETE WHERE PAD REMOVED
6. SURFACE MOUNTED FIRE EXTINGUISHER PER 4/A-502 - MOUNT @ +48" A.F.F. TO HANDLE - PROVIDE BACKING PER 4/5.2.0
7. FLOOR SINK - SEE P-201
8. EYE WASH STATION - SEE P-201
9. FLOOR DRAIN - SEE P-201
10. CORE THROUGH (E) CMU WALL FOR ALL HYDRONIC AND PLUMBING PIPING WHERE REQUIRED - PATCH (E) CORES NO LONGER USED WITH CONCRETE - COORDINATE EXTENTS WITH MECHANICAL AND PLUMBING
11. CONCRETE PATCH-BACK AT PLUMBING TRENCHES
12. MECHANICAL DUCT DOWN - SEE M-201
13. MECHANICAL EQUIPMENT PER M-201 ON (E) CONCRETE FOUNDATION

GENERAL NOTES

1. SEE A-501 FOR WALL TYPES
2. SEE A-601 FOR SCHEDULES

LEGEND

- (E) CMU WALL
- (E) STUD WALL W/ CEMENT PLASTER BOTH SIDES
- STUD WALL - SEE PLAN FOR WALL TYPES
- CONCRETE PAD - MATCH HEIGHT OF (E) WHERE ADJOINING
- AREA OF CONCRETE PATCH W/ 5/8" DOWELS @ 12" O.C. @ PERIMETER
- 1-HR RATED CONSTRUCTION (PER UL #U419)
- WALL TYPE
- DOOR TYPE
- LOUVER TYPE
- PATCH WHERE (E) CONCRETE PAD REMOVED

0 2' 4' 8'
SCALE: 1/4" = 1'-0"

PREPARED FOR THE
GROSSMONT UNION HIGH SCHOOL DISTRICT
P.O.BOX 1048
LA MESA, CALIFORNIA

PREPARED BY
PLATT/WHITELAW ARCHITECTS, INC.
4094 30TH STREET
SAN DIEGO, CA (619)546-4320 FAX (619)546-4360

DIV. OF THE STATE ARCHITECT
OFFICE OF REGULATION SERVICES
04-115930
FILE #17-H
AC. 04-271
DATE

FLOOR PLAN
CENTRAL PLANT EQUIPMENT UPGRADE
VALHALLA HIGH SCHOOL
1725 HILLSDALE ROAD
EL CAJON, CA 92019

REVISION	DATE

PROJECT NO. PWA #05611.10
FILE NAME: A-102 FLOOR PLAN.DWG
DATE: 4/14/2017 DRAWN: - CHECKED: -

A-102
SHEET NO. - OF - SHEETS

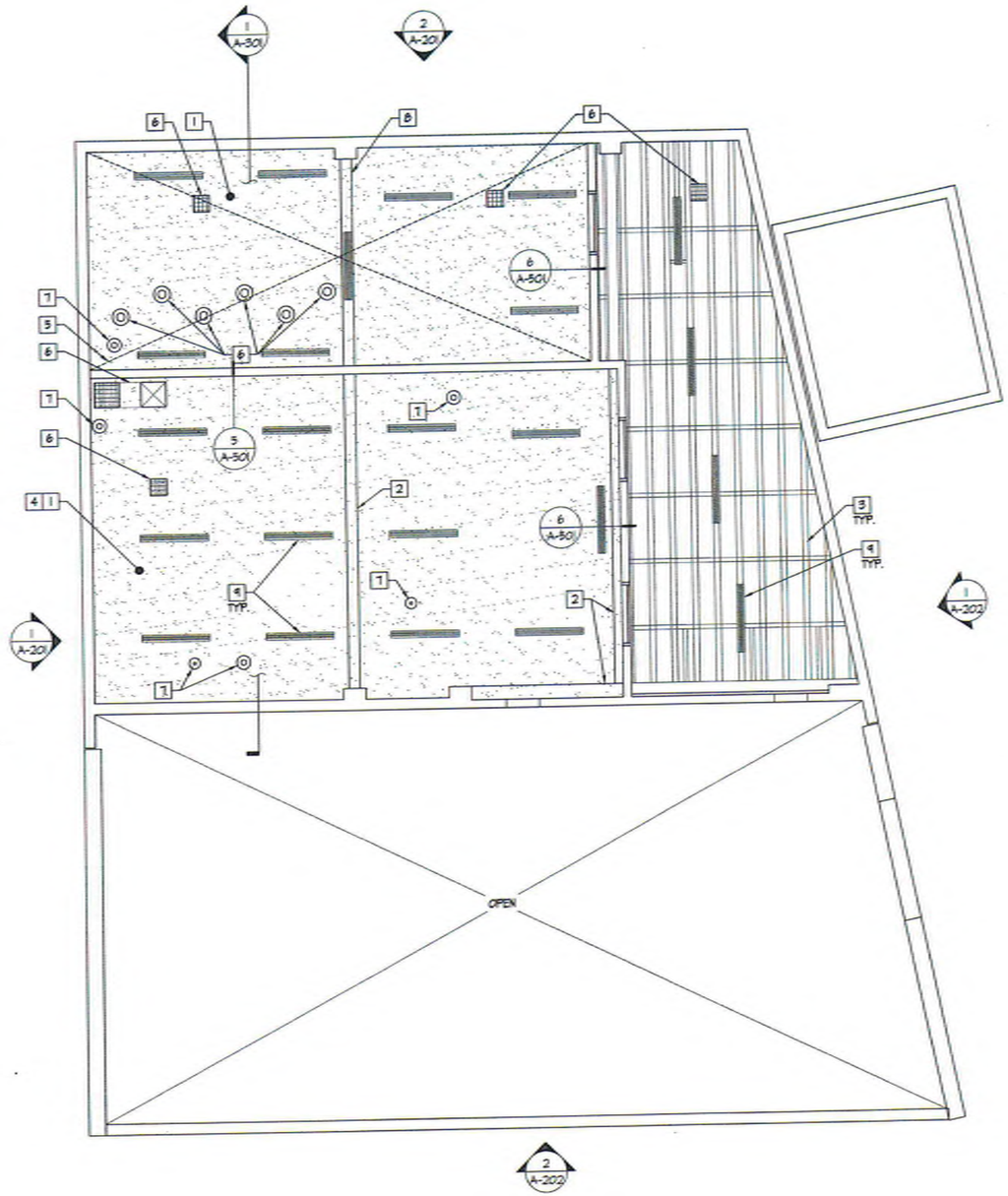

1 REFLECTED CEILING PLAN
1/4" = 1'-0"

PLAN NORTH

KEYNOTES

1. 5/8" TYPE 'X' GYP. BD.
2. WRAP (E) BEAM W/ 5/8" TYPE 'X' GYP. BD.
3. OPEN TO (E) WOOD FRAMING - PAINT
4. PROVIDE R-38 BATT INSULATION BELOW ROOF DECK @ CHILLER ROOM
5. AREA OF 1-HR. RATED CEILING PER 2016 CBC, SECTION 722 & LEGEND BELOW
6. DUCTED VENTILATION PER 2/A-502 - COORDINATE W/ M-202
7. THROUGH-CEILING PENETRATION PER 1/A-502 - COORDINATE W/ M-202
8. WRAP (E) BEAM W/ (2) LAYERS 5/8" TYPE 'X' GYP. BD. PER 8/A-501
9. LIGHT FIXTURE

CEILING LEGEND

GYP. BD. CEILING

GYP. BD. CEILING - 1 HR. RATED PER BELOW

PER CBC, SECTION 722
(CALCULATED FIRE RESISTANCE)

(2) LAYERS 5/8" TYPE 'X' GYP. BD. = 40 MIN.
PER LAYER = 80 MIN. TOTAL
MAX. 60 MIN. (1 HR.) PER CBC, 722.6.1.1
= 1 HOUR CALCULATED FIRE RESISTANCE

INSTALL: BASE LAYER 5/8" TYPE 'X' GYP. BD. APPLIED AT RIGHT ANGLES TO (E) 2X4S FLAT @ 16" O.C. WITH 1-1/4" TYPE S OR TYPE W DRYWALL SCREWS AT 24" O.C. - FACE LAYER 5/8" TYPE 'X' GYP. BD. APPLIED AT RIGHT ANGLES TO (E) 2X4S FLAT @ 16" O.C. THROUGH BASE LAYER WITH 1-7/8" TYPE S OR TYPE W DRYWALL SCREWS AT 12" O.C. AT JOINTS AND INTERMEDIATES - FACE LAYER TYPE G DRYWALL SCREWS PLACED 2" BACK ON EITHER SIDE OF FACE LAYER END JOINTS 12" O.C.

0 2' 4' 8'
SCALE: 1/4" = 1'-0"

PREPARED FOR THE
GROSSMONT UNION HIGH SCHOOL DISTRICT
P.O.BOX 1043
LA MESA, CALIFORNIA

PREPARED BY
PLATT/WHITELAW ARCHITECTS, INC.
4034 30TH STREET
SAN DIEGO, CA (619)546-4326 FAX (619)546-4350

CONTRACTOR REP. DIV. OF ARCHITECT OFFICE OF REGULATION SERVICES
04-115600
FILE #/H
AO. FLS
DATE 01/27/17

REFLECTED CEILING PLAN

CENTRAL PLANT EQUIPMENT UPGRADE

VALHALLA HIGH SCHOOL
1725 HILLSDALE ROAD
EL CAJON, CA 92019

REVISION	DATE

PROJECT NO. PWA #0586.10
A-103 REFLECTED
FILE NAME: CEILING PLANDWG
DATE: 4/14/2017 DRAWN: - CHECKED: -

A-103

SHEET NO. 1 - OF - SHEETS

J:\0586.10 Valhalla Central Plant\03-Drawings\Central Plant\Sheets\A-103 Reflected Ceiling Plan.dwg 04/19/2017 07:53

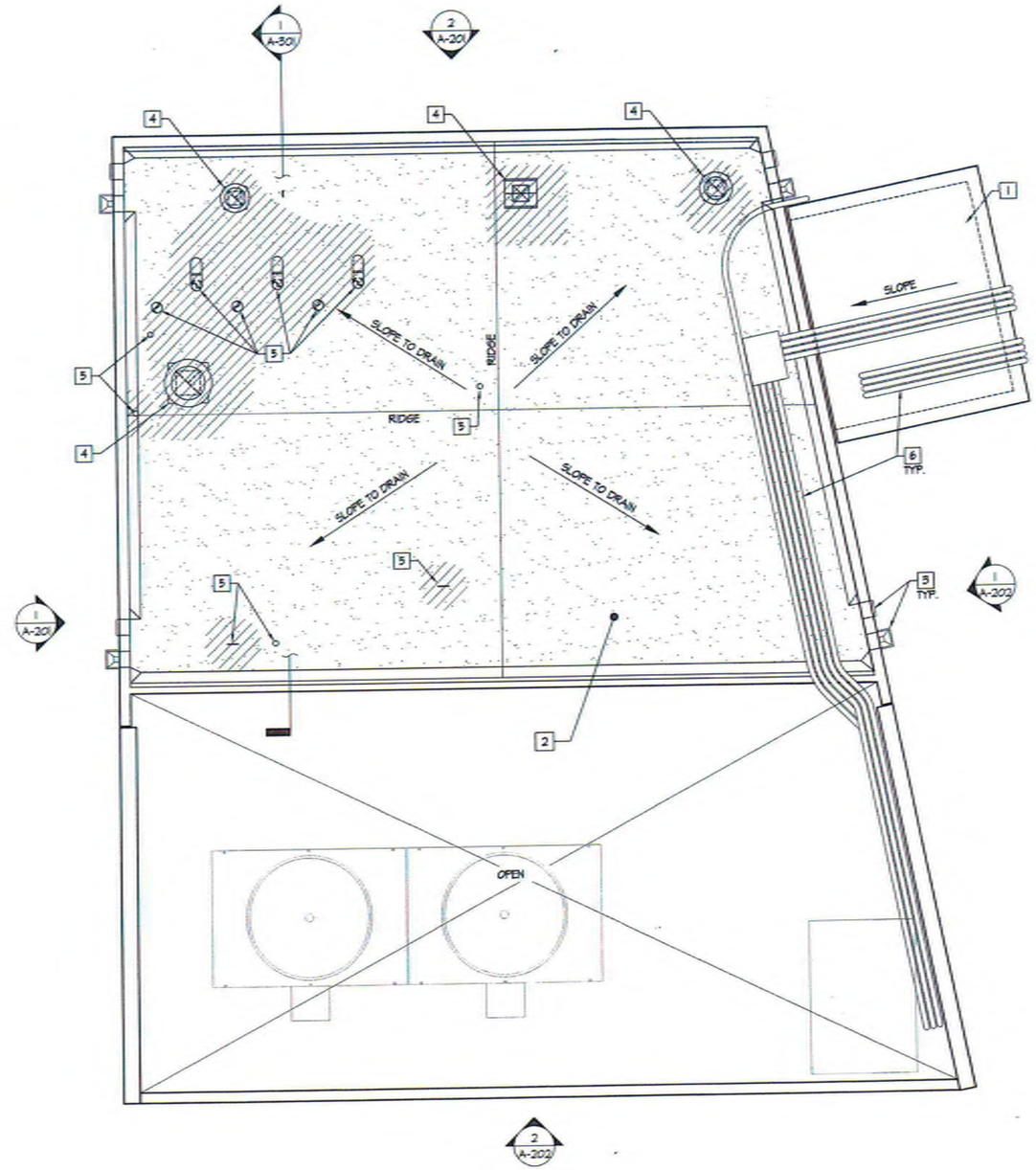

1 ROOF PLAN
1/4" = 1'-0"

PLAN NORTH

KEYNOTES

1. (E) METAL ROOFING TO REMAIN
2. (E) BUILT-UP ROOFING W/ GRAVEL BALLAST (MIN. CLASS 'B') TO REMAIN - PATCH & REPAIR WHERE IMPACTED BY DEMOLITION AND NEW WORK
3. (E) SHEET METAL ROOF DRAIN SCUPPER & DOWNSPOUT AND OVERFLOW SCUPPER TO REMAIN
4. CURB-MOUNTED MECHANICAL EQUIPMENT PER 2/A-502 - COORDINATE W/ M-202
5. THROUGH-ROOF PIPE PENETRATION PER 1/A-502 - COORDINATE W/ M-202 & P-201 - COMBINE FLASHING BASE WHERE PENETRATIONS ARE LESS THAN 12" APART
6. (E) CONDUIT TO REMAIN

LEGEND

AREAS OF ROOFING PATCH & REPAIR INCL. ROOF SHEATHING

0 2' 4' 8'
SCALE: 1/4" = 1'-0"

PREPARED FOR THE
GROSSMONT UNION HIGH SCHOOL DISTRICT
P.O.BOX 1043
LA MESA, CALIFORNIA

PREPARED BY
PLATT/WHITELAW ARCHITECTS, INC.
4034 30TH STREET
SAN DIEGO, CA (619)546-4329 FAX (619)546-4360

CONSTRUCTION STAMP
DIV. OF STATE ARCHITECT
OFFICE OF REGULATION SERVICES
04-115900
FILE 45-H
AO
PLA
DATE 04.27.17

REGISTERED ARCHITECT

ROOF PLAN

CENTRAL PLANT EQUIPMENT UPGRADE

VALHALLA HIGH SCHOOL
1725 HILLSDALE ROAD
EL CAJON, CA 92019

REVISION	DATE

PROJECT NO. FNA #0361.10

FILE NAME: A-104 ROOF PLAN.DWG

DATE: 4/14/2017 DRAWN: - CHECKED: -

A-104

SHEET NO. - OF - SHEETS

A:\2361.10 Valhalla Central Plant\03-Drawings\Central Plant\Sheets\A-104 Roof Plan.dwg 04/19/2017 07:04

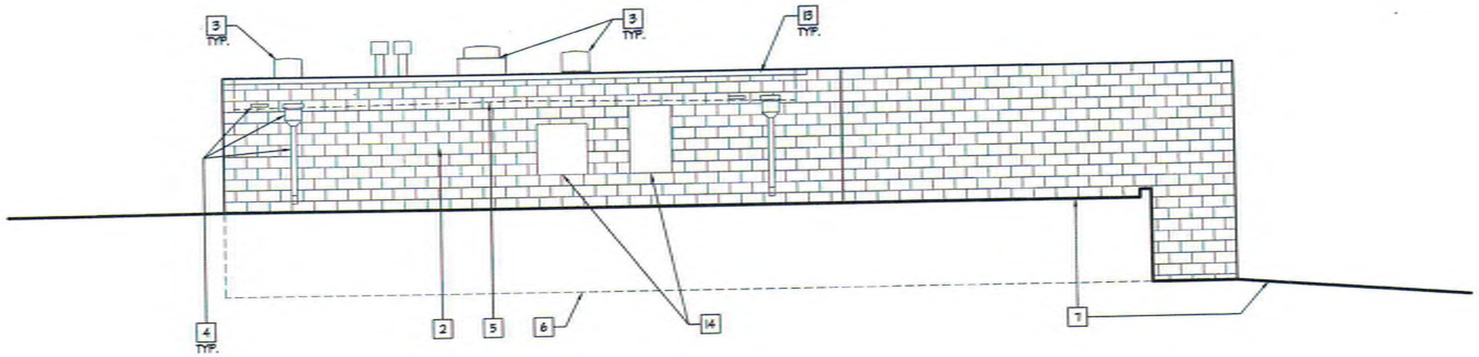

1 NORTH ELEVATION
1/4" = 1'-0"

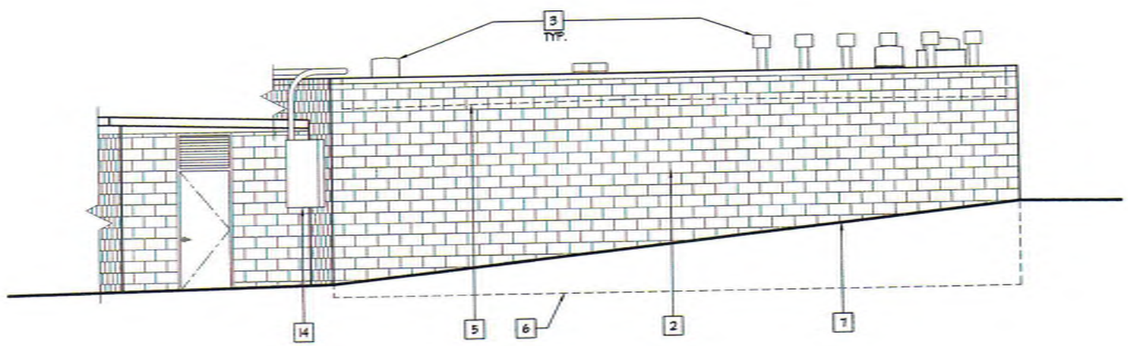

2 EAST ELEVATION
1/4" = 1'-0"

KEYNOTES

1. NOT USED
2. (E) CMU WALL
3. ROOF-MOUNTED MECHANICAL EQUIPMENT - SEE I/A-104
4. (E) ROOF DRAIN SCUPPER & DOWNSPOUT AND OVERFLOW SCUPPER TO REMAIN
5. LINE OF ROOF BEYOND
6. LINE OF FLOOR BEYOND
7. LINE OF GRADE
8. NOT USED
9. NOT USED
10. NOT USED
11. NOT USED
12. NOT USED
13. (E) SHEET METAL COPING CAP TO REMAIN
14. (E) ELECTRICAL EQUIPMENT TO REMAIN

SCALE: 1/4" = 1'-0"

PREPARED FOR THE
GROSSMONT UNION HIGH SCHOOL DISTRICT
P.O.BOX 1043
LA MESA, CALIFORNIA

PREPARED BY
PLATT/WHITELAW ARCHITECTS, INC.
4034 30TH STREET
SAN DIEGO, CA (619)546-4350 FAX (619)546-4350

CERTIFICATION STAMP
DIV. OF THE STATE ARCHITECT
OFFICE OF REGULATION SERVICES
04-115930
FILE 49-H4
AO. PLB
DATE 04.27.17

EXTERIOR ELEVATIONS

CENTRAL PLANT EQUIPMENT UPGRADE

VALHALLA HIGH SCHOOL
1725 HILLSDALE ROAD
EL CAJON, CA 92019

REVISION	DATE

PROJECT NO. PWA #0561.10
A-201 EXTERIOR
FILE NAME: ELEVATIONS.DWG
DATE: 4/14/2017
DRAWN: -
CHECKED: -

A-201

SHEET NO. : - OF - SHEETS

A:\0561.10 Valhalla Central Plant\03-Drawings\Central Plant\sheet\A-201 Exterior Elevations.dwg 04/18/2017 07:04

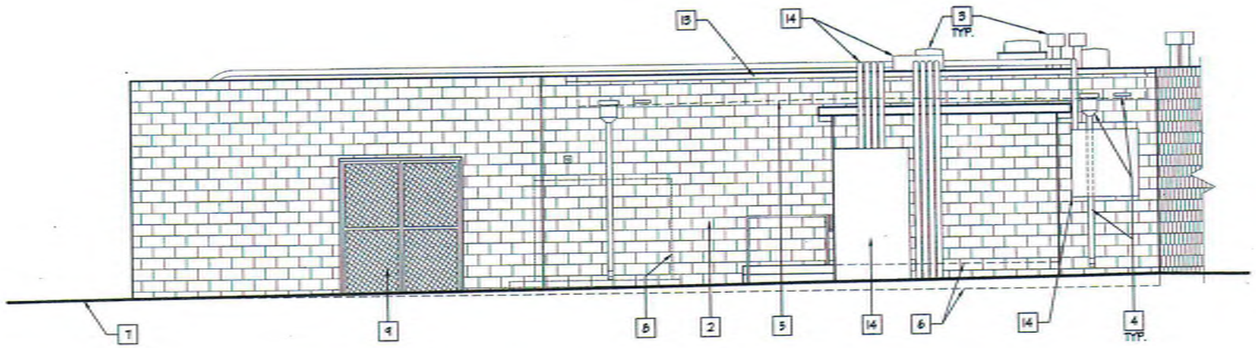

1 SOUTH ELEVATION
1/4" = 1'-0"

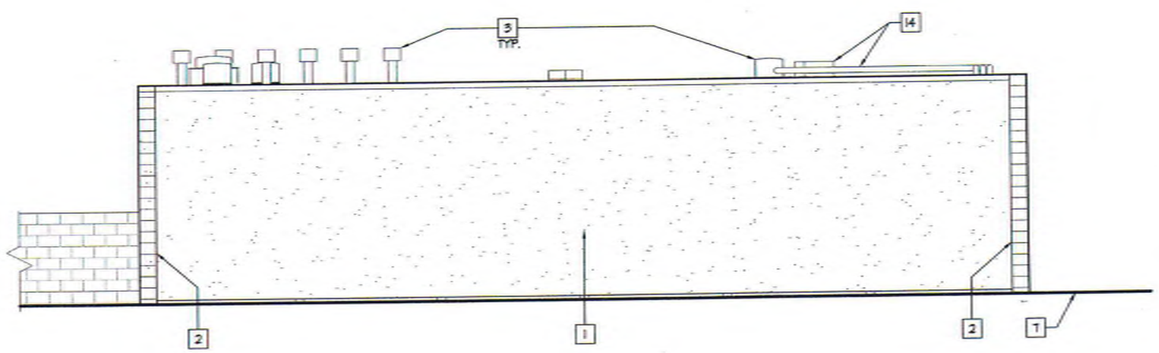

2 WEST ELEVATION
1/4" = 1'-0"

KEYNOTES

1. (E) CEMENT PLASTER
2. (E) CMU WALL
3. ROOF-MOUNTED MECHANICAL EQUIPMENT - SEE I/A-104
4. (E) ROOF DRAIN SCUPPER & DOWNSPOUT AND OVERFLOW SCUPPER TO REMAIN
5. LINE OF ROOF BEYOND
6. LINE OF FLOOR BEYOND
7. LINE OF GRADE
8. (E) TRANSFORMER TO REMAIN - SHOWN DASHED FOR CLARITY
9. (E) CHAIN LINK GATE TO REMAIN
10. NOT USED
11. NOT USED
12. NOT USED
13. (E) SHEET METAL COPING CAP TO REMAIN
14. (E) ELECTRICAL EQUIPMENT TO REMAIN

0 2' 4' 8'
SCALE: 1/4" = 1'-0"

PREPARED FOR THE
GROSSMONT UNION HIGH SCHOOL DISTRICT
P.O.BOX 1043
LA MESA, CALIFORNIA

PREPARED BY
PLATT/WHITELAW ARCHITECTS, INC.
4084 30TH STREET
SAN DIEGO, CA (619)546-4350 FAX (619)546-4350

DIVISION OF STATE ARCHITECT
OFFICE OF REGULATION SERVICES
04-115930
FILE 40144
AC
DATE 042712

REGISTERED ARCHITECT

EXTERIOR ELEVATIONS
CENTRAL PLANT EQUIPMENT UPGRADE
VALHALLA HIGH SCHOOL
1725 HILLSDALE ROAD
EL CAJON, CA 92019

REVISION	DATE

PROJECT NO. PNA #03641.10
FILE NAME: A-202 EXTERIOR ELEVATIONS.DWG
DATE: 4/14/2011
DRAWN: -
CHECKED: -

A-202
SHEET NO. : - OF - SHEETS

A:\03641.10 Valhalla Central Plant\03-Drawings\Central Plant\sheets\A-202 Exterior Elevations.dwg 04/19/2017 07:54

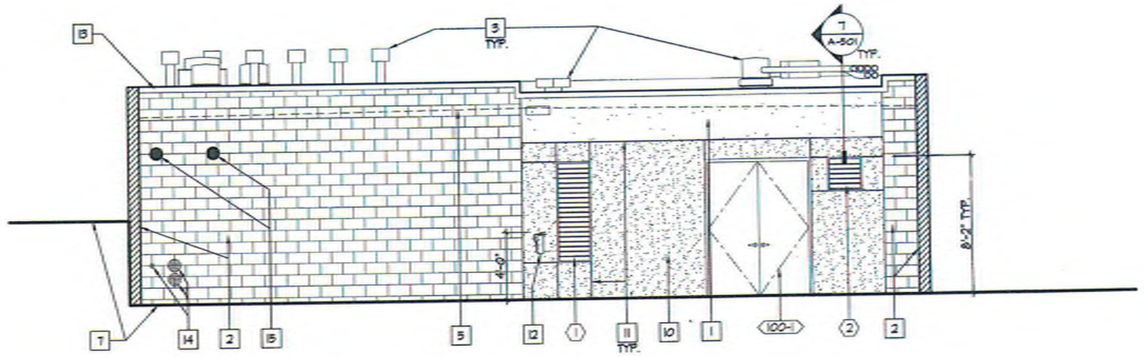

1 COURTYARD ELEVATION
1/4" = 1'-0"

KEYNOTES

1. (E) CEMENT PLASTER
2. (E) CMU WALL
3. ROOF-MOUNTED MECHANICAL EQUIPMENT - SEE I/A-104
4. NOT USED
5. LINE OF ROOF BEYOND
6. NOT USED
7. LINE OF GRADE
8. NOT USED
9. NOT USED
10. CEMENT PLASTER - SEE WALL TYPE SHEET A-501
11. CEMENT PLASTER CONTROL JOINTS
12. FIRE EXTINGUISHER
13. (E) SHEET METAL COPING CAP TO REMAIN
14. PATCH (E) ABANDONED CORES AT CMU WALL W/ CONCRETE
15. APPROX. LOCATION OF CORE IN (E) CMU WALL FOR HYDRONIC PIPING PENETRATION

LEGEND

XXX-X DOOR - SEE A-601 FOR SCHEDULE

X LOUVER - SEE A-601 FOR SCHEDULE

0 2' 4' 8'
SCALE: 1/4" = 1'-0"

PREPARED FOR THE
GROSSMONT UNION HIGH SCHOOL DISTRICT
P.O.BOX 1043
LA MESA, CALIFORNIA

PREPARED BY
PLATT/WHITELAW ARCHITECTS, INC.
4094 30TH STREET
SAN DIEGO, CA (619)546-4326 FAX (619)546-4360

DIVISION OF STATE ARCHITECT
OFFICE OF REGULATORY SERVICES
04-115930
FILE 15-H4
AC. TLD.
DATE 042717

REGISTERED ARCHITECT
PLATT/WHITELAW
ARCHITECTS, INC.
C-18-3821
EXP. 12/31/2017
STATE OF CALIFORNIA

INTERIOR ELEVATION

CENTRAL PLANT EQUIPMENT UPGRADE

VALHALLA HIGH SCHOOL
1725 HILLSDALE ROAD
EL CAJON, CA 92019

REVISION	DATE

PROJECT NO. FHA #056110
A-203 INTERIOR
FILE NAME: ELEVATION.DWG
DATE: 4/14/2017
DRAWN: -
CHECKED: -

A-203

SHEET NO. - - OF - SHEETS

A:\05811.10 Valhalla Central Plant\03-Drawings\Central Plant\Valhalla\A-203 Interior Elevation.dwg 04/19/2017 07:05

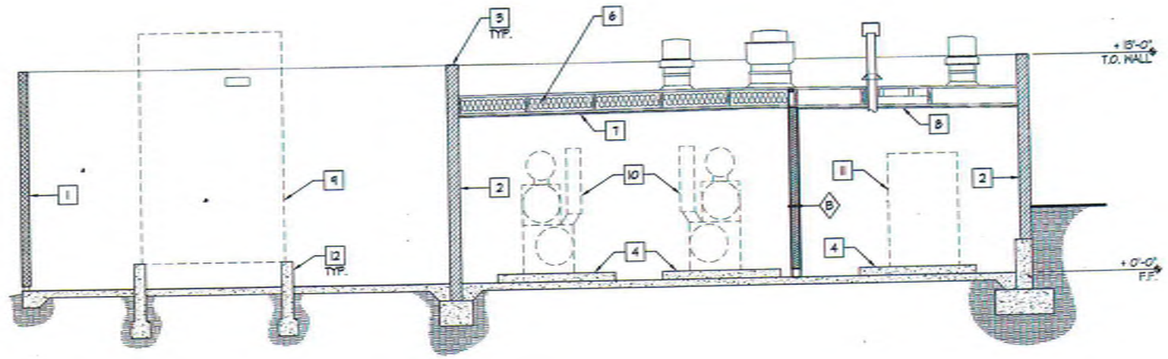

1 SECTION
1/4" = 1'-0"

KEYNOTES

1. (E) CEMENT PLASTER STUD WALL
2. (E) CMU WALL
3. (E) SHEET METAL COPING CAP TO REMAIN
4. (E) CONCRETE EQUIPMENT PAD
5. CONCRETE EQUIPMENT PAD
6. R-38G BATT INSULATION AT CHILLER ROOM
7. GYP. BD. CEILING - SEE A-105
8. 1-HR. RATED GYP. BD. CEILING - SEE A-105
9. COOLING TOWER
10. CHILLER
11. BOILER
12. (E) COOLING TOWER CONCRETE STEMWALLS/FOUNDATION

LEGEND

(X) WALL TYPE - SEE A-501

0 2' 4' 8'
SCALE: 1/4" = 1'-0"

PREPARED FOR THE
GROSSMONT UNION HIGH SCHOOL DISTRICT
P.O.BOX 1043
LA MESA, CALIFORNIA

PREPARED BY
PLATT/WHITELAW ARCHITECTS, INC.
4034 30TH STREET
SAN DIEGO, CA (619)546-4326 FAX (619)546-4360

CONSTRUCTION SITE ACCESSIBILITY INSPECTION OFFICE OF REGULATION SERVICES
DSA 04-115930
FILE 107-14
PLN 50
AO
DATE 04/27/17

REGISTERED ARCHITECT

SECTION
CENTRAL PLANT EQUIPMENT UPGRADE
VALHALLA HIGH SCHOOL
1725 HILLSDALE ROAD
EL CAJON, CA 92019

REVISION	DATE

PROJECT NO. PWA #05611.10
FILE NAME: A-301.DWG
DATE: 4/14/2017
DRAWN: -
CHECKED: -

A-301
SHEET NO. : - OF - SHEETS

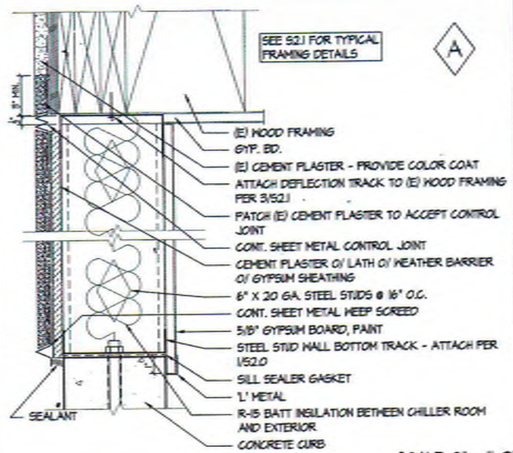

SCALE: 3" = 1'-0"

WALL TYPE 'A'

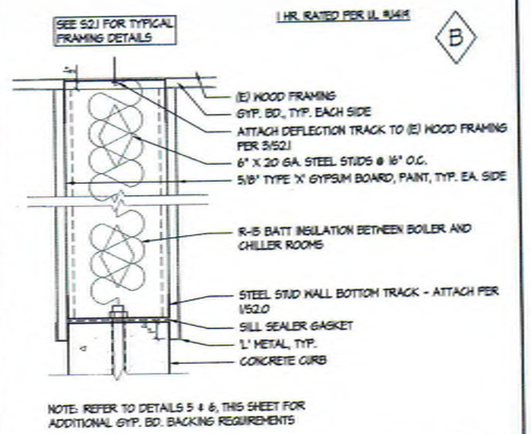

NOTE: REFER TO DETAILS 5 & 6, THIS SHEET FOR ADDITIONAL GYP. BD. BACKING REQUIREMENTS

SCALE: 3" = 1'-0"

WALL TYPE 'B'

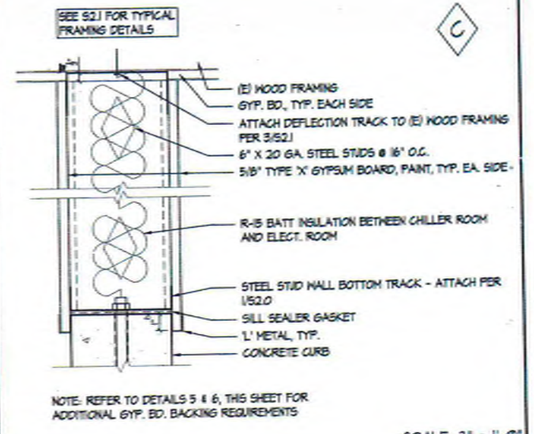

NOTE: REFER TO DETAILS 5 & 6, THIS SHEET FOR ADDITIONAL GYP. BD. BACKING REQUIREMENTS

SCALE: 3" = 1'-0"

WALL TYPE 'C'

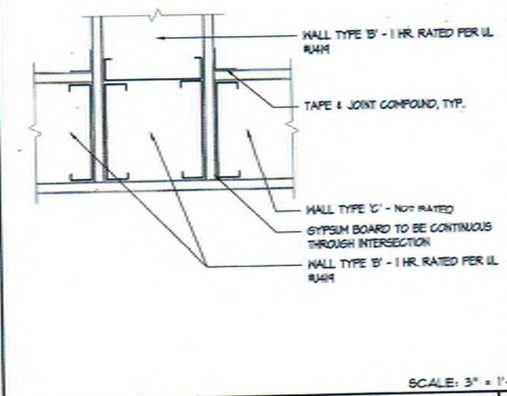

SCALE: 3" = 1'-0"

RATED WALL INTERSECTION

4

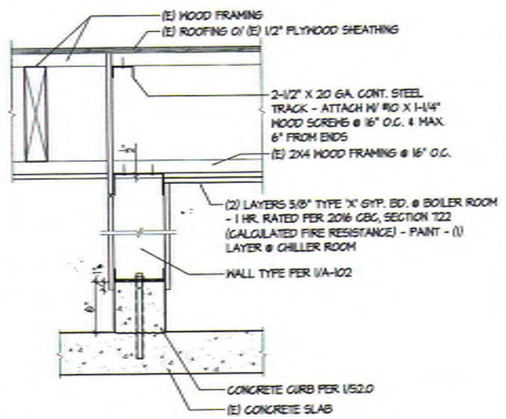

SCALE: 1-1/2" = 1'-0"

GYPSUM BOARD BACKING PERP. TO FRAMING

5

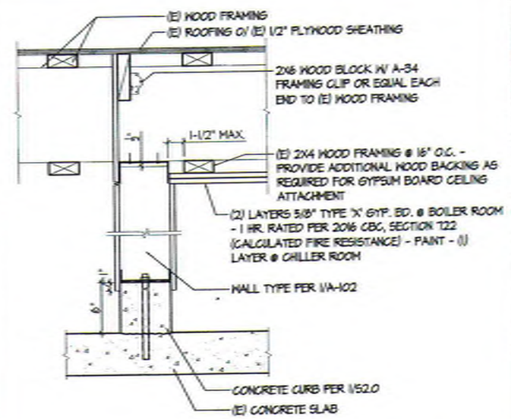

SCALE: 1-1/2" = 1'-0"

GYPSUM BOARD BACKING PARALLEL TO FRAMING

6

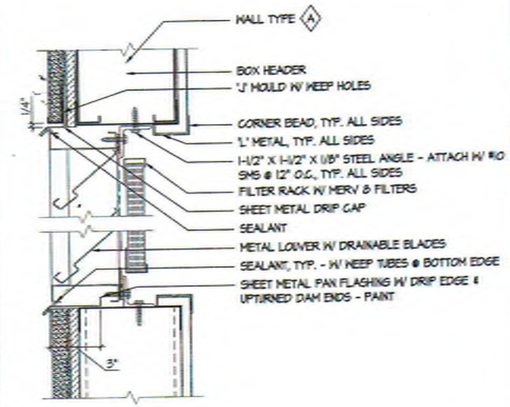

SCALE: 3" = 1'-0"

WALL LOUVER HEAD & SILL (JAMB, SIM.)

7

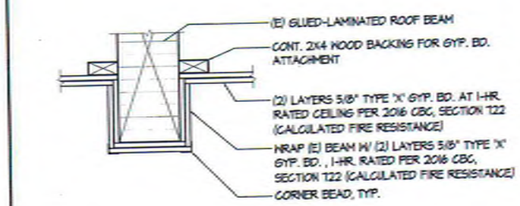

SCALE: 1-1/2" = 1'-0"

1-HR. RATED BEAM PROTECTION

8

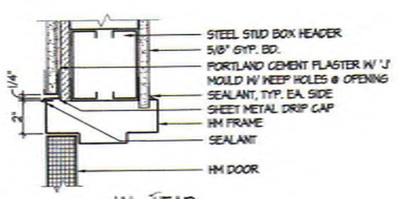

'A' - HEAD

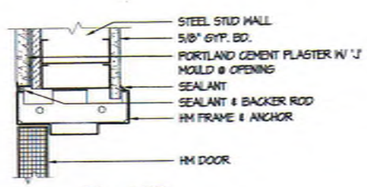

'B' - JAMB

SCALE: 3" = 1'-0"

DOOR HEAD & JAMB DETAILS

9

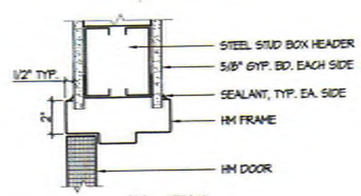

'A' - HEAD

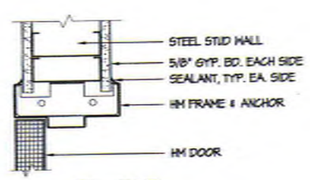

'B' - JAMB

SCALE: 3" = 1'-0"

DOOR HEAD & JAMB DETAILS

10

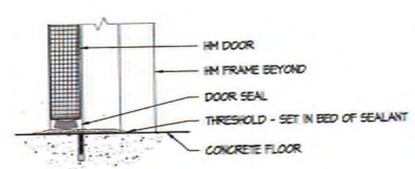

SCALE: 3" = 1'-0"

DOOR SILL DETAIL

11

12

PREPARED FOR THE
GROSSMONT UNION HIGH SCHOOL DISTRICT
P.O.BOX 1043
LA MESA, CALIFORNIA

PREPARED BY
PLATT/WHITELAW ARCHITECTS, INC.
4094 30TH STREET
SAN DIEGO, CA (619)640-4320 FAX (619)640-4350

DEPARTMENT OF STATE ARCHITECT
DIV. OF REGULATION SERVICES
OFFICE OF REGULATION SERVICES
04-115930
FILE 45-H1
AC
DATE 08-22-17

REGISTERED ARCHITECT
PAUL WHITELAW
No. 10864
STATE OF CALIFORNIA

WALL TYPES & DETAILS

CENTRAL PLANT EQUIPMENT UPGRADE

VALHALLA HIGH SCHOOL
1725 HILLSDALE ROAD
EL CAJON, CA 92019

REVISION	DATE

PROJECT NO. PWA #0561.10

FILE NAME: A-501.DWG

DATE: 4/14/2017 DRAWN: - CHECKED: -

A-501

SHEET NO. : - OF - SHEETS

A:\0561.10 Valhalla Central Plant\US-Drawings\Central Plant\sheets\A-501.dwg 04/19/2017 07:56

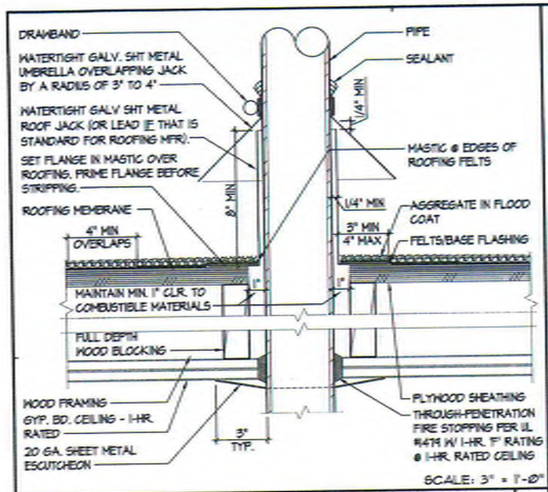

SCALE: 3" = 1'-0"

PIPE PENETRATION DETAIL | 1

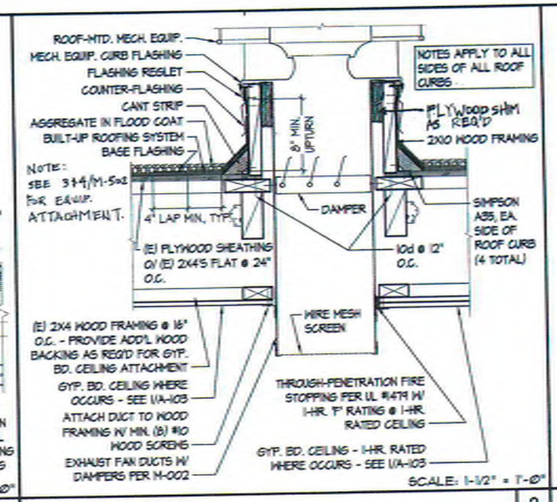

SCALE: 1-1/2" = 1'-0"

ROOF CURB DETAIL | 2

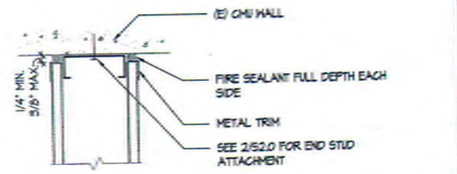

SCALE: NTS

FIRE-RATED WALL END TERMINATION | 3

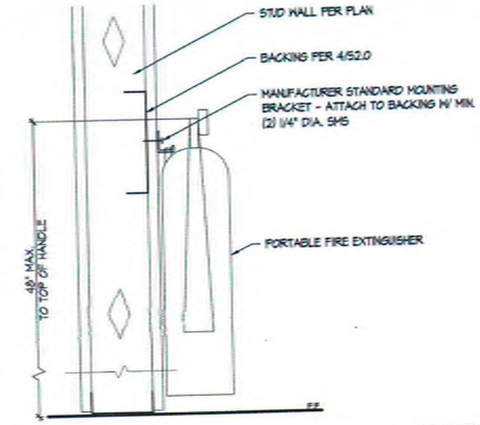

SCALE: 3" = 1'-0"

FIRE EXTINGUISHER WALL-HUNG | 4

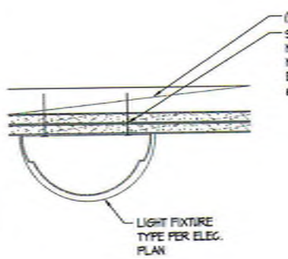

SCALE: 3" = 1'-0"

SURFACE MOUNTED LIGHT FIXTURE | 5

6

7

8

9

10

11

12

PREPARED FOR THE
GROSSMONT UNION HIGH SCHOOL DISTRICT
P.O.BOX 1043
LA MESA, CALIFORNIA

PREPARED BY
PLATT/WHITELAW ARCHITECTS, INC.
4034 30TH STREET
SAN DIEGO, CA (619)546-4350 FAX (619)546-4350

ENDORSEMENT STAMP
DIV. OF THE STATE ARCHITECT
OFFICE OF REGULATION SERVICES
04-115930
FILE-SEAL
NO. 04 27 17
DATE

DETAILS

CENTRAL PLANT EQUIPMENT UPGRADE

VALHALLA HIGH SCHOOL
1725 HILLSDALE ROAD
EL CAJON, CA 92019

REVISION	DATE

PROJECT NO. PWA #0561.10
FILE NAME: A-501D05
DATE: 4/14/2017 DRAWN: - CHECKED: -

A-502

SHEET NO.: - OF - SHEETS

J:\0561.10 Valhalla Central Plant\03-Drawings\Central Plant\sheets\A-502.dwg 04/26/2017 16:07

DOOR AND FRAME SCHEDULE

DOOR							FRAME				FIRE RATING LABEL	HARDWARE	NOTES
MARK	(N)EW OR (E)XISTING	TYPE	SIZE			MATL	MATL	DETAIL					
			WD	HGT	THK			HEAD	JAMB	SILL		SET NO	
100-1	(N)	A	PR 3'-0"	8'-0"	1-3/4	H/M	H/M	9A/A-501	9B/A-501	11/A-501	--	001	--
100-2	(N)	B	3'-6"	8'-0"	1-3/4	H/M	H/M	10A/A-501	10B/A-501	11/A-501	--	002	--
100-3	(N)	B	3'-6"	8'-0"	1-3/4	H/M	H/M	10A/A-501	10B/A-501	11/A-501	1 HR	003	SELF-CLOSING
100-4	(N)	B	3'-6"	8'-0"	1-3/4	H/M	H/M	10A/A-501	10B/A-501	11/A-501	--	002	--

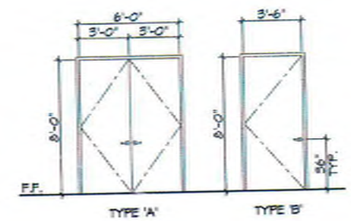

DOOR TYPE ELEVATIONS

DOOR NOTES:
1. PAINT ALL DOORS AND FRAMES - COLOR: MATCH FRAZEE #CL2507N "ZODIAC"

LOUVER SCHEDULE

MARK	SIZE		MATL	DETAIL			NOTES
	WIDTH	HEIGHT		HEAD	JAMB	SILL	
1	2'-0"	6'-0"	STL.	7/A-501	7/A-501 SIM.	7/A-501	--
2	2'-0"	2'-0"	STL.	7/A-501	7/A-501 SIM.	7/A-501	--

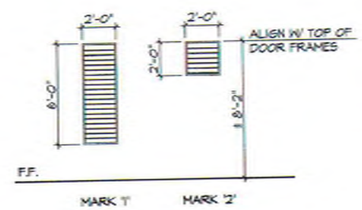

LOUVER ELEVATIONS

LOUVER NOTES:
1. ALL LOUVERS TO BE FACTORY FINISHED - COLOR: MATCH PAREX #10400 "SNOWBALL"

ROOM FINISH SCHEDULE

ROOM NAME	FLOOR	BASE	WALLS				CEILING		NOTES
			N	S	E	W	MATL	HEIGHT	
ELECT. ROOM	C	--	P	CMU	CMU	CMU/P	E	VARIES	--
CHILLER ROOM	C	--	CMU	P	P	CMU/P	P	VARIES	--
BOILER ROOM	C	--	CMU	P	CMU	P	P	VARIES	--
COOLING TOWER COURTYARD	--	--	--	--	CP	--	--	--	--

MATERIALS LEGEND

C - (E) CONCRETE - CLEAN & SEAL; (N) CONCRETE EQUIPMENT PADS - SEAL; POLYMER SEALER PER SECTION 03300
P - GYP. BD., PAINT - COLOR: MATCH DUNN/EDWARDS "SWISS COFFEE"
CMU - CONCRETE MASONRY UNITS - CLEAN & SEAL; WATER REPELLENT PER SECTION 07900
CP - PORTLAND CEMENT PLASTER, PAINT - COLOR: MATCH PAREX #10400 "SNOWBALL"
E - (E) EXPOSED WOOD STRUCTURE, PAINT - COLOR: MATCH DUNN/EDWARDS "SWISS COFFEE"

PREPARED FOR THE
GROSSMONT UNION HIGH SCHOOL DISTRICT
P.O.BOX 1043
LA MESA, CALIFORNIA

PREPARED BY
PLATT/WHITELAW ARCHITECTS, INC.
4094 30TH STREET
SAN DIEGO, CA (619)546-4350 FAX (619)546-4350

DIVISION OF STATE ARCHITECT
OFFICE OF REGULATION SERVICES
04-115930
FILE 107.14
AD FLD 88
DATE 04/27/17

SCHEDULES

CENTRAL PLANT EQUIPMENT UPGRADE

VALHALLA HIGH SCHOOL
1725 HILLSDALE ROAD
EL CAJON, CA 92019

REVISION	DATE

PROJECT NO. PHA #0561.10

FILE NAME: A-601 SCHEDULES.DWG

DATE: 4/14/2017 DRAWN: - CHECKED: -

A-601

SHEET NO. : - OF - SHEETS

J:\0561.10 Valhalla Central Plant\CD-Drawings\Central Plant\Valhalla\A-601 Schedules.dwg 04/19/2017 07:57

GENERAL REQUIREMENTS

1. VERIFICATION: VERIFY ALL DIMENSIONS, ELEVATIONS AND SITE CONDITIONS BEFORE STARTING WORK. NOTIFY THE ARCHITECT IMMEDIATELY OF ANY DISCREPANCIES.

2. CONFLICTS: NOTES AND DETAILS ON THE DRAWINGS TAKE PRECEDENCE OVER THE GENERAL NOTES AND TYPICAL DETAILS IN CASE OF CONFLICT.

3. CODES: ALL MATERIALS AND WORK SHALL CONFORM TO THE REQUIREMENTS OF THE CALIFORNIA CODE OF REGULATIONS, TITLE 24, PART 2, 2016 CALIFORNIA BUILDING CODE (CBC).

4. ALTERATION, REHABILITATION OR RECONSTRUCTION: TO BE IN ACCORDANCE WITH THE CBC. SHOULD ANY EXISTING CONDITIONS SUCH AS DETERIORATION OR NON-COMPLYING CONSTRUCTION BE DISCOVERED WHICH IS NOT COVERED BY THE CONTRACT DOCUMENTS WHEREIN THE FINISHED WORK WILL NOT COMPLY WITH THE CBC, A CHANGE ORDER, OR A SEPARATE SET OF PLANS AND SPECIFICATIONS, DETAILING AND SPECIFYING THE REQUIRED WORK SHALL BE SUBMITTED TO AND APPROVED BY DSA BEFORE PROCEEDING WITH THE WORK.

5. SUBSTITUTIONS: PROVIDE MANUFACTURER'S ICC REPORTS AND A LIST OF ALL PROPOSED SUBSTITUTIONS TO THE ARCHITECT AND DSA FOR REVIEW AND APPROVAL BEFORE FABRICATION.

6. SIMILAR WORK: WHERE CONSTRUCTION DETAILS ARE NOT SHOWN OR NOTED FOR ANY PART OF THE WORK, SUCH DETAILS SHALL BE THE SAME AS FOR SIMILAR WORK SHOWN ON THE DRAWINGS.

7. PIPES, DUCTS, SLEEVES, CHASES, ETC.: SHALL NOT BE PLACED IN SLABS, BEAMS, OR WALLS UNLESS SPECIFICALLY SHOWN OR NOTED NOR SHALL ANY STRUCTURAL MEMBER BE CUT FOR PIPES, DUCTS, ETC., UNLESS SPECIFICALLY SHOWN. OBTAIN PRIOR WRITTEN APPROVAL FOR INSTALLATION OF ANY ADDITIONAL PIPES, DUCTS, ETC.

8. EXCAVATIONS: LOCATE AND PROTECT UNDERGROUND OR CONCEALED CONDUIT, PLUMBING OR OTHER UTILITIES WHERE NEW WORK IS BEING PERFORMED.

9. CONSTRUCTION LOADS: MATERIALS SHALL BE EVENLY DISTRIBUTED IF PLACED ON FRAMED FLOORS OR ROOFS. LOADS SHALL NOT EXCEED THE ALLOWABLE LOADING FOR THE SUPPORTING MEMBERS AND THEIR CONNECTIONS.

10. THE STRUCTURAL DRAWINGS ILLUSTRATE THE NEW STRUCTURAL MEMBERS. REFER TO ARCHITECTURAL, MECHANICAL AND ELECTRICAL DRAWINGS FOR NON-STRUCTURAL ITEMS WHICH REQUIRE SPECIAL PROVISIONS DURING THE CONSTRUCTION OF THE STRUCTURAL MEMBERS.

11. REFER TO ARCHITECTURAL PLANS FOR FLOOR DEPRESSIONS, SLOPES, DRAINS, CURBS, PADS, EMBEDDED ITEMS, NON-BEARING PARTITIONS, ETC. REFER TO MECHANICAL AND ELECTRICAL PLANS FOR SLEEVES AND HANGERS FOR PIPES, DUCTS AND EQUIPMENT.

12. CONSTRUCTION METHODS AND PROJECT SAFETY: THE CONTRACT DRAWINGS AND SPECIFICATIONS REPRESENT THE FINISHED STRUCTURE AND DO NOT INDICATE METHODS, PROCEDURES OR SEQUENCE OF CONSTRUCTION. THE CONTRACTOR SHALL TAKE NECESSARY PRECAUTIONS TO MAINTAIN AND INSURE THE INTEGRITY OF THE STRUCTURE DURING CONSTRUCTION. NEITHER THE OWNER, ARCHITECT NOR ENGINEER WILL ENFORCE SAFETY MEASURES OR REGULATIONS. THE CONTRACTOR SHALL DESIGN, CONSTRUCT AND MAINTAIN ALL SAFETY DEVICES, INCLUDING SHORING AND BRACING, AND BE SOLELY RESPONSIBLE FOR CONFORMING TO ALL LOCAL, STATE AND FEDERAL SAFETY AND HEALTH STANDARDS, LAWS AND REGULATIONS.

13. ANY DEVIATION FROM THE APPROVED SET OF STRUCTURAL DRAWINGS SHALL ONLY BE MADE AFTER WRITTEN APPROVAL BY THE STRUCTURAL ENGINEER.

14. STRUCTURAL PLANS INDICATE ONLY THE APPROXIMATE LOCATION OF MECHANICAL, ELECTRICAL AND OTHER EQUIPMENT, AS WELL AS THE RELATED AUXILIARY FRAMING NECESSARY TO SUPPORT SUCH EQUIPMENT. THE FINAL POSITIONING OF THESE ITEMS IS DEPENDENT UPON THE EQUIPMENT PROVIDED. THE CONTRACTOR SHALL BE RESPONSIBLE FOR COORDINATING WORK BETWEEN SUBCONTRACTORS AND CRAFTS IN THIS REGARD, AND PROVIDING NECESSARY DIMENSIONS IN A TIMELY MANNER TO ALL PARTIES INVOLVED.

DESIGN CRITERIA

1. DEAD LOAD - ROOF:
   - 5 PLY AND GRAVEL.....7.0 PSF
   - RE-ROOF.....4.0 PSF
   - PLYWOOD.....1.5 PSF
   - 2x4 @ 24".....0.7 PSF
   - 3x12 @ 48".....2.0 PSF
   - 5/8" GYP (2 LAYERS).....5.8 PSF
   - 21 PSF
2. LIVE LOADS:
   - ROOF (BASDC LIVE LOAD).....20 PSF
3. LATERAL LOADS:
   - A) SEISMIC - SHORT PERIOD
     - SPECTRAL RESPONSE..... Ss = 0.852 g
     - ONE - SECOND PERIOD
       - SPECTRAL RESPONSE..... S1 = 0.330 g
     - SITE CLASSIFICATION..... D
     - ADJUSTED SPECTRAL RESPONSE..... Sms = 0.988 g
     - ADJUSTED SPECTRAL RESPONSE..... Sm1 = 0.574 g
     - DESIGN SPECTRAL RESPONSE.... SDS = 0.659 g (2/3 Sms)
     - DESIGN SPECTRAL RESPONSE.... SD1 = 0.383 g (2/3 Sm1)
     - OCCUPANCY CATEGORY: I
     - SEISMIC DESIGN CATEGORY.....D

REINFORCED CONCRETE (CBC CHAPTER 19A)

1. MATERIALS:
   - CEMENT.....ASTM C-150 TYPE II
   - AGGREGATE.....ASTM C-33 CRUSHED ROCK
   - REINFORCEMENT.....ASTM A-615 GRADE 60 TYPICAL
   - REINFORCEMENT.....ASTM A-706 GRADE 60 WELDED
   - ANCHOR BOLTS.....ASTM A-36 HOOKED ANCHOR BOLTS
   - ANCHOR BOLTS(RODS)..ASTM F-1554 HEADED MACHINE BOLTS, GRADE 36
2. CONCRETE STRENGTHS: THE CONCRETE STRENGTHS SHOWN IN THE FOLLOWING TABLE ARE THE MINIMUM COMPRESSIVE STRENGTHS AT 28 DAYS AND THE WATER/CEMENT RATIO IS THE MAXIMUM. THE SPECIFIED SLUMP IS THE MAXIMUM PRIOR TO THE ADDITION OF ADMIXTURES. CONCRETE SHALL BE STANDARD WEIGHT CONCRETE (145 PCF).

ITEM OF CONSTRUCTION	STRENGTH (PSI)	AGG (IN)	SLUMP (IN)	WATER/CEMENT (LB/LB)
FOUNDATIONS.....	3,000	1	4	0.57
SLABS-ON-GRADE.....	3,000	1	4	0.57

3. CONCRETE SHALL BE PROPORTIONED SUCH THAT 7 DAY STRENGTHS ARE A MINIMUM OF SEVENTY PERCENT OF THE SPECIFIED 28 DAY STRENGTH FOR ANY CONCRETE CONSTRUCTION REQUIRING SHORING, BRACING OR TO RECEIVE CONSTRUCTION LOADS. IN ADDITION, SLABS-ON-GRADE SHALL HAVE A COMPRESSIVE STRENGTH OF AT LEAST 1,800 PSI AT THREE DAYS IF SUBJECT TO CONSTRUCTION TRAFFIC.
4. REINFORCEMENT:
   - A) SHOP DRAWINGS, FABRICATION AND PLACING: SHALL CONFORM TO ACI 315 AND ACI 318. SHOP DRAWINGS REVIEWED BY THE ARCHITECT BEFORE FABRICATION.
   - B) MINIMUM CONCRETE COVER:
     - EXPOSED TO EARTH.....3"
     - EXPOSED TO WEATHER.....2"
     - NOT EXPOSED TO WEATHER OR IN CONTACT WITH GROUND:
       - SLABS, WALLS, JOISTS.....1"
       - BEAMS, COLUMNS (TIES, STIRRUPS, SPIRALS).1-1/2"
   - C) CHAIRS, SPACERS AND SAND PLATES: AS REQUIRED TO MAINTAIN CONCRETE COVER.
   - D) VERTICAL REINFORCEMENT: SHALL BE DOWELED TO SUPPORTING MEMBERS WITH THE SAME SIZE AND SPACING OF REINFORCEMENT AS SHOWN IN THE DRAWINGS AND GENERAL NOTES.
   - E) HORIZONTAL REINFORCEMENT: ALL BARS ENDING AT THE FACE OF A WALL, COLUMN OR BEAM SHALL EXTEND TO WITHIN 2" OF THE FAR FACE AND HAVE A 90 DEGREE HOOK UNLESS OTHERWISE SHOWN.
   - F) SPACING: CLEAR DISTANCE BETWEEN PARALLEL REINFORCEMENT OR PARALLEL REINFORCING BARS BUNDLED IN CONTACT TO ACT AS A UNIT IN A LAYER SHALL NOT BE LESS THAN 1-1/2 TIMES THE NOMINAL DIAMETER OF THE REINFORCEMENT, OR 1-1/3 TIMES MAXIMUM SIZE AGGREGATE, NOR LESS THAN 1-1/2". NOMINAL DIAMETER FOR A UNIT OF BUNDLED BARS SHALL BE THE EQUIVALENT DIAMETER OF THE COMBINED AREAS OF THE BARS BUNDLED.
   - G) TACK WELDING, WELDING, HEATING OR CUTTING OF BARS: NOT PERMITTED UON.
   - H) SLAB CORNERS: PROVIDE 2-#4 X 4'-0" AT RE-ENTRANT CORNERS AND EACH CORNER OF RECTANGULAR HOLES IN SLABS. PLACE BARS DIAGONALLY.
   - I) SPLICES (LAPS) UON:
     - i) FOR BARS #6 AND SMALLER:
       - a) 60 DIAMETERS FOR BOTTOM BARS OF FOOTINGS AND BEAMS, SLABS LESS THAN 12" THICK, COMPOSITE TOPPING, AND SLAB-ON-GRADE REINFORCING
       - b) 75 DIAMETERS FOR ALL OTHER CONDITIONS.
     - ii) FOR #7 BARS AND LARGER:
       - a) 72 DIAMETERS FOR BOTTOM BARS OF FOOTINGS AND BEAMS, SLABS LESS THAN 12" THICK, AND SLAB-ON-GRADE REINFORCING
       - b) 94 DIAMETERS FOR ALL OTHER CONDITIONS.
     - iii) IN NO CASE SHALL LAPS BE LESS THAN 24 INCHES LONG.
     - iv) STAGGER CONTINUOUS FOOTING BOTTOM SPLICES AT LEAST 6'-0" FROM SPLICES IN OTHER BOTTOM REINFORCEMENT; STAGGER SPLICES FOR TOP REINFORCEMENT SIMILARLY.
   - J) WELDED REINFORCEMENT: ASTM A-706, CERTIFIED WELDERS. WELD PER AWS D1.4.
     - i) A706 BAR TO A706 BAR.....E80XX ELECTRODES
       - A706 BAR TO A36 OR A992 STEEL.....E70XX ELECTRODES
   - K) ALL REINFORCING BARS SHALL BE DEFORMED BARS UNLESS OTHERWISE NOTED.
5. ANCHOR BOLTS, DOWELS AND HOLD-DOWN ANCHORS: SECURELY WELD IN PLACE PRIOR TO FOUNDATION INSPECTION BY THE INSPECTOR OF RECORD AND OBSERVATION BY THE ARCHITECT.
6. PIPES, SLEEVES AND DUCTS: NOT TO BE PLACED IN WALLS, BEAMS, SLABS, FOOTINGS OR COLUMNS UNLESS SPECIFICALLY DETAILED.
7. CHAMFER: 3/4 INCH ON EXPOSED CORNERS.
8. ADMIXTURES: REVIEWED BY ARCHITECT, NO CALCIUM CHLORIDE.
9. CONSTRUCTION JOINTS: HEAVY SANDBLAST (1/4 INCH AMPLITUDE MINIMUM). LOCATION OF JOINTS TO BE REVIEWED BY THE ARCHITECT. WAIT 48 HOURS BETWEEN POURS.
10. SLAB-ON-GRADE JOINTS: LOCATION OF ALL CONSTRUCTION, CONTROL AND WEAKENED PLANE JOINTS NOT SPECIFICALLY INDICATED ON THE DRAWINGS SHALL BE REVIEWED BY THE ARCHITECT PRIOR TO THE PLACING OF REINFORCEMENT.
11. CONCRETE CURING: SEE SPECIFICATIONS.
12. BOLTS IN CONCRETE: MINIMUM EMBEDMENT SHALL BE PER CBC TABLE 1911.A.2, BUT NOT LESS THAN 7-INCHES UNLESS OTHERWISE NOTED.

SPECIAL INSPECTION/INSPECTOR REQUIREMENTS (CBC 1704A)

REQUIREMENTS FOR SPECIAL INSPECTION:

1. PROJECT INSPECTOR: IN ACCORDANCE WITH TITLE 24, PART 1, SECTIONS 4-333 AND 4-342.
2. CERTIFIED SPECIAL INSPECTOR: EMPLOYED BY THE DISTRICT AND APPROVED BY THE ARCHITECT, STRUCTURAL ENGENEER AND DSA.
3. REPORTS: PREPARED BY THE SPECIAL INSPECTOR AND SIGNED BY A CIVIL ENGINEER. SUBMITTED TO THE DSA, THE ARCHITECT, AND ENGINEER. ALL DISCREPANCIES SHALL BE BROUGHT TO THE IMMEDIATE ATTENTION OF THE CONTRACTOR FOR CORRECTION; THEN, IF NOT CORRECTED, TO THE ARCHITECT, ENGINEER AND THE DSA (CBC 1704A.1.2).
4. THE SPECIAL INSPECTION IS TO BE CONTINUOUS DURING THE PERFORMANCE OF THE WORK UNLESS OTHERWISE SPECIFIED.

SUMMARY OF STRUCTURAL CONTINUOUS AND PERIODIC SPECIAL INSPECTIONS (SEE DSA - 103)

1. RESPONSIBILITY: IT IS THE RESPONSIBILITY OF THE PROJECT INSPECTOR TO INFORM THE SPECIAL INSPECTOR OR INSPECTION AGENCY AT LEAST ONE WORKING DAY PRIOR TO PERFORMING ANY WORK THAT REQUIRES SPECIAL INSPECTION.
2. SPECIAL INSPECTIONS:
   - A) CONCRETE AND MASONRY ANCHORS: FOR ALL THREADED ROD AND REINFORCING STEEL ANCHORED WITH EPOXY ADHESIVE IN CONCRETE OR MASONRY; FOR ALL EXPANSION ANCHORS IN CONCRETE OR MASONRY. INSPECTION/TESTING SHALL BE IN CONFORMANCE WITH THE ANCHOR MANUFACTURER'S ICC REPORT AND SHALL INCLUDE AS A MINIMUM VERIFICATION OF HOLE DEPTH AND DIAMETER, CLEAN OUT, ALL MATERIALS, INSTALLATION TORQUE AND PROOF LOAD TESTS.

SPECIAL STRUCTURAL OBSERVATIONS BY ENGINEER (CBC 1710A)

1. NOTIFICATION: 48 HOURS BEFORE OBSERVATION. DELINQUENT NOTIFICATION MAY REQUIRE DEMOLITION OF COVERING MATERIALS TO FACILITATE OBSERVATION.
2. OBSERVATIONS BY ENGINEER:
   - A) REINFORCEMENT BEFORE CONCRETE PLACEMENT.
   - B) FIELD WELDED CONNECTIONS.
   - C) COMPLETION OF ROUGH FRAMING.

POWDER DRIVEN (LOW VELOCITY) FASTENERS/ SHOT PINS

1. THE USE OF POWDER DRIVEN FASTENERS FOR TENSION LOADS IS LIMITED TO SUPPORT OF MINOR LOADS, SUCH AS ACOUSTICAL CEILINGS, DUCTWORK, CONDUIT, ETC.
2. POWDER DRIVEN FASTENERS SHALL NOT BE USED IN CURBS.
3. ALLOWABLE TENSION LOADS SHALL BE LIMITED TO 100 POUNDS, OR 80% OF THE ICC APPROVED VALUES, WHICHEVER IS LESS.
4. QUALIFICATION FOR USE OF ALL POWER ACTIVATED TOOLS SHALL MEET ANSI A10.3 STANDARD AS REQUIRED BY THE MANUFACTURER AND SHALL MEET OSHA REQUIREMENTS.
5. THE OPERATOR, TOOL, AND FASTENERS SHALL BE PREQUALIFIED BY THE PROJECT INSPECTOR. HE SHALL OBSERVE THE TESTING OF THE FIRST TEN FASTENER INSTALLATIONS. A 'PULL OUT' TEST LOAD OF 200 POUNDS SHALL BE APPLIED TO THE PIN IN SUCH A MANNER AS NOT TO RESIST THE SPRALLING TENDENCY OF THE CONCRETE SURROUNDING THE PIN. THEREAFTER RANDOM TESTS, UNDER THE PROJECT INSPECTOR'S SUPERVISION, SHALL BE MADE OF APPROXIMATELY ONE IN TEN PINS. IF ANY PIN FAILS TESTING, TEST ALL PINS OF THE SAME CATEGORY NOT PREVIOUSLY TESTED UNTIL TWENTY CONSECUTIVE PINS PASS, THEN RESUME INITIAL TESTING FREQUENCY.
6. FASTENERS SHALL HAVE ICC ER APPROVAL FOR THE TYPE OF CONCRETE INTO WHICH THE FASTENERS ARE INSTALLED.
7. WHEN INSTALLING POWDER DRIVEN PINS, USE CARE AND CAUTION TO AVOID CUTTING OR DAMAGING REINFORCING BARS. MAINTAIN A MINIMUM OF ONE INCH CLEARANCE BETWEEN THE REINFORCING BAR AND THE PIN.

CONCRETE SCREW ANCHORS

1. THE USE OF SCREW ANCHORS SHALL BE LIMITED TO LOCATIONS SPECIFIED ON THE APPROVED CONTRACT DRAWINGS.
2. THE ANCHORS MUST BE INSTALLED IN ACCORDANCE WITH THE MANUFACTURERS PUBLISHED INSTALLATION INSTRUCTIONS AND A VALID ICC-ES EVALUATION REPORT. IN CASE OF CONFLICT THE REPORT GOVERNS. SEE [ICC ESR-3027 FOR HILTI KWIK HUS-EZ SCREW ANCHORS][ICC ESR-2713 FOR SIMPSON TITEN HD SCREW ANCHORS].
3. MATERIALS:
   - CARBON STEEL ANCHORS.....W/ZINC COATING PER ICC ESR REPORT
   - KWIKH WASHER HEAD
   - CONCRETE (MIN)..... F'c = 3,000 PSI (STONE AGGREGATE)
4. INSTALLATION:
   - A) CARBIDE-TIPPED DRILL BITS COMPLYING WITH ANSI B212.15-1994. DRILL BIT SIZE IS ANCHOR DIAMETER.
   - B) HOLES CLEANED OF DUST AND DEBRIS. HOLE DEPTH AS REQUIRED PER ICC ESR REPORT.
   - C) MINIMUM HOLE DIAMETER IN THE FIXTURE OR FASTENED PART SHALL BE THE ANCHOR DIAMETER + 1/8".
   - D) SETTING DETAILS:

HILTI KWIK HUS-EZ & HUS-EZ I (ESR-3027)**						
INSTALLATION ITEMS	UNITS	ANCHOR DIAMETER (IN)				
		1/4	3/8	1/2	5/8	3/4
MIN NOMINAL EMBED	IN	1-5/8	2-1/2	3	3-1/4	4
MIN EDGE DIST (UON)	IN	2	2.92	3-3/4	3.83	4.41
MIN SPACING (UON)	IN	3	3	3	4	4
MIN CONC THICKNESS	IN	3-1/4	4	4-3/4	5	6
MAX INSTALL TORQUE	FT-LB	18	40	45	85	115

SIMPSON TITEN HD SCREW ANCHOR (ESR-2713)**							
INSTALLATION ITEMS	UNITS	ANCHOR DIAMETER (IN)					
		3/8	1/2	5/8	3/4	3/8 ROD HANGER	1/2 ROD HANGER
MIN NOMINAL EMBED	IN	3-1/4	4	5-1/2	6-1/4	2-1/2	2-1/2
MIN EDGE DIST (UON)	IN	3-5/8	4-1/2	6-3/8	7-5/16	2-11/16	2-11/16
MIN SPACING (UON)	IN	3	3	3	3	3	3
MIN CONC THICKNESS	IN	5	6-1/4	8-1/2	10	4	4-1/4
MAX INSTALL TORQUE	FT-LB	50	65	100	150	50	50

** A CLOSER SPACING OR EDGE DISTANCE, MAY BE ALLOWED WHERE SPECIFICALLY DETAILED ON THE CONTRACT DOCUMENTS OR IN ACCORDANCE WITH THE EVALUATION REPORT AS APPROVED BY THE STRUCTURAL ENGINEER.

5. TEST LOADS AND FREQUENCY: REQUIRED TEST LOAD SHALL BE EQUIVALENT TO THE MANUFACTURER'S RECOMMENDED INSTALLATION TORQUE AS SHOWN ABOVE.
   - A) ALL ANCHORS SHALL BE TESTED, UNO HEREIN.
   - B) SILL BOLTS: TEST 10% OF ANCHORS.
   - C) NONSTRUCTURAL APPLICATIONS SUCH AS EQUIPMENT ANCHORAGE: TEST 50% OF ANCHORS OR ALTERNATE BOLTS IN A GROUP, INCLUDING AT LEAST ONE-HALF THE ANCHORS IN EACH GROUP.
   - D) IF ANY ANCHOR FAILS TESTING, ALL ANCHORS OF THE SAME TYPE SHALL BE TESTED, WHICH ARE INSTALLED BY THE SAME TRADE, NOT PREVIOUSLY TESTED UNTIL TWENTY (20) CONSECUTIVE ANCHORS PASS, THEN RESUME THE INITIAL TESTING FREQUENCY.
6. TEST EQUIPMENT INCLUDING TORQUE WRENCHES ARE TO BE CALIBRATED USING AN APPROVED TESTING LABORATORY. THEY MUST BE CALIBRATED BY A STANDARD TRACEABLE TO THE NATIONAL INSTITUTE OF STANDARDS AND TECHNOLOGY (NIST).
7. TEST ACCEPTANCE CRITERIA:
   - A) TORQUE WRENCH METHOD: ANCHORS TESTED WITH A CALIBRATED TORQUE WRENCH MUST ATTAIN THE SPECIFIED TORQUE WITH 1/4 TURN OF THE SCREW AFTER INITIAL SEATING OF THE SCREW HEAD.
8. DO NOT INSTALL SCREW ANCHORS IN CONCRETE THAT IS LESS THAN 7 DAYS OLD.
9. ANCHORS ARE LIMITED TO USE IN DRY, INTERIOR LOCATIONS.
10. SCREW ANCHORS ARE PROHIBITED FOR RESISTING FATIGUE OR SHOCK LOADING AND ARE NOT PERMITTED TO SUPPORT FIRE-RESISTANCE-RATED CONSTRUCTION.
11. PERIODIC SPECIAL INSPECTION IS REQUIRED UNLESS UON IN TABLE 1705A.3 "REQUIRED VERIFICATION AND INSPECTION OF CONCRETE CONSTRUCTION" INCLUDED WITHIN THESE GENERAL NOTES.

CONCRETE - EPOXY ANCHORED THREADED RODS

1. MATERIALS: (ICC ESR 2322)
   - HILTI HIT-RE500 — EPOXY ADHESIVE
   - CONCRETE (MIN) ..... F'c = 2,500 PSI — STONE AGGREGATE
   - THREADED RODS ..... ASTM A-193 — TYPICAL
   - NUTS ..... ASTM A-563 — HEX, GRADE A
2. INSTALLATION:
   - A) CARBIDE-TIPPED DRILL BITS ANSI B212.15-1994.
   - B) HOLES CLEANED OF DUST AND DEBRIS WITH A NYLON BRUSH AND A JET OF COMPRESSED AIR.
   - C) INSTALLATION AND ALLOWABLE LOADING:

ROD DIA (IN)	BIT DIA (IN)	MIN EMBED (IN)	ALLOWABLE TENSION (LBS)	LOAD SHEAR (LBS)	MIN EDGE DIST (IN)	TIGHTENING TORQUE (FT LBS)
3/8	7/16	3-3/8	1,370	1,320	5-1/4	18
1/2	9/16	4-1/2	2,400	2,375	6-3/8	30
5/8	3/4	5-5/8	3,595	3,375	7-1/2	75
3/4	7/8	6-3/4	5,025	4,600	10-1/8	150
7/8	1	7-7/8	5,340	5,330	11-5/8	175
1	1-1/8	9	6,440	6,140	13-1/2	235
1-1/4	1-3/8	11-1/4	8,645	8,875	14-1/2	400

3. ALLOWABLE LOADS ARE STRENGTH DESIGN LOADS.
4. DO NOT INSTALL IN CONCRETE THAT IS LESS THAN 7 DAYS OLD.
5. MINIMUM MEMBER THICKNESS TO RECEIVE ROD SHALL BE NO LESS THAN 1.5 TIMES THE ANCHOR EMBEDMENT DEPTH.
6. ANCHORS SHALL BE INSTALLED IN HAMMER DRILLED HOLES.

CONCRETE-EPOXY ANCHORED REINFORCEMENT

1. MATERIALS: (ICC ESR 2332)
   - HILTI HIT-RE500 — EPOXY ADHESIVE
   - CONCRETE (MIN) ..... F'c = 2,500 PSI — STONE AGGREGATE
   - REINFORCEMENT ..... ASTM A615 — GRADE 60
2. INSTALLATION:
   - A) CARBIDE-TIPPED DRILL BITS ANSI B212.15-1994.
   - B) HOLES CLEANED OF DUST AND DEBRIS WITH A NYLON BRUSH AND A JET OF COMPRESSED AIR.
   - C) INSTALLATION AND ALLOWABLE LOADS:

BAR DIA (IN)	BIT DIA (IN)	MIN EMBED (IN)	ALLOWABLE TENSION (LBS)	LOAD SHEAR (LBS)	MIN EDGE DIST (IN)
#3	1/2	3-3/8	1,370	1,320	5-1/4
#4	5/8	4-1/2	2,400	2,375	6-3/8
#5	3/4	5-5/8	3,595	3,375	7-1/2
#6	7/8	6-3/4	5,025	4,600	10-1/8
#7	1	7-7/8	5,340	5,300	11-5/8
#8	1-1/8	9	6,440	6,140	13-1/2

3. ALLOWABLE LOADS ARE STRENGTH DESIGN LOADS.
4. DO NOT INSTALL IN CONCRETE THAT IS LESS THAN 7 DAYS OLD.
5. MINIMUM MEMBER THICKNESS TO RECEIVE REBAR SHALL BE NO LESS THAN 1.5 TIMES THE ANCHOR EMBEDMENT DEPTH.
6. REBAR SHALL BE INSTALLED IN HAMMER DRILLED HOLES.

17005.00
SDSE
619.297.3203 • FAX 619.297.4913
www.sdse.com

PREPARED FOR THE
GROSSMONT UNION HIGH SCHOOL DISTRICT
P.O.BOX 1043
LA MESA, CALIFORNIA

PREPARED BY
PLATT/WHITELAW ARCHITECTS, INC.
4094 30TH STREET
SAN DIEGO, CA (619)546-4828 FAX (619)546-4960

CERTIFICATION STAMP
DIV. OF THE STATE ARCHITECT
OFFICE OF PUBLIC SCHOOL CONSTRUCTION
04-105930
FILE 07-14
AC.
FLS
DATE 042717

GENERAL NOTES
BOILER/CHILLER REPLACEMENT
CENTRAL PLANT EQUIPMENT UPGRADE

VALHALLA HIGH SCHOOL
1725 HILLSDALE ROAD
EL CAJON, CA 92019

REVISION	DATE

PROJECT NO. PWA #03E1.10

FILE NAME:

DATE: 4/26/2017 DRAWN: RD CHECKED: DPK

S1.0

SHEET NO.: OF SHEETS

J:\data\proj\17005.00 VALHALLA CENTRAL PLANT\dwg\S1.0.dwg 04/26/2017 13:37

EPOXY ADHESIVE ANCHORED THREADED RODS-MASONRY (GROUT FILLED)

1. THE USE OF EPOXY ADHESIVE ANCHORS SHALL BE LIMITED TO LOCATIONS SPECIFIED ON THE APPROVED CONTRACT DRAWINGS.

2. THE ANCHORS MUST BE INSTALLED IN ACCORDANCE WITH THE MANUFACTURERS PUBLISHED INSTALLATION INSTRUCTIONS AND A VALID ICC-ES EVALUATION REPORT. ICC ESR-2682 FOR HILTI HIT-HY 70 ADHESIVE ANCHORS.

3. MATERIALS:
   HILTI HY-70.....ADHESIVE
   CARBON THREADED ROD.....ASTM A-307 GRADE C, OR ASTM A36
   NUTS.....ASTM A-563 HEX, GRADE A
   WASHERS.....ASTM F-844

   CMU (NON).....F'm= 1,500 PSI.....ASTM C90...GRADE N
   GROUT.....F'g= 2,000 PSI.....COARSE GROUT
   MORTAR.....COMPRESSIVE STRENGTH = 1,500 PSI

   *PROVIDE HOT DIPPED GALVANIZED ANCHORS COMPLYING WITH ASTM A-153, CLASS C OR D, OR STAINLESS STEEL ANCHORS WHERE ANCHORS ARE USED IN WET, HARSH OR EXTERIOR CONDITIONS.

4. INSTALLATION:

   A) PREDRILL HOLES NORMAL TO THE SURFACE USING A ROTARY HAMMER, IN EITHER THE ROTATION-AND-HAMMERING OR ROTATION-ONLY MODE, HAVING A CARBIDE-TIPPED DRILL BIT COMPLYING WITH ANSI B212.15-1994.

   B) HOLES CLEANED OF DUST AND DEBRIS PER MANUFACTURERS PUBLISHED INSTALLATION INSTRUCTIONS.

   C) MINIMUM HOLE DIAMETER IN THE FIXTURE OR FASTENED PART SHALL BE THE ANCHOR DIAMETER + 1/16".

   D) "FACE OF" GROUT-FILLED CMU SETTING DETAILS:
      1) ANCHORS ARE PERMITTED TO BE INSTALLED AT ANY LOCATION IN THE FACE OF THE GROUT-FILLED CMU (SILL, NEB, HEAD JOINT, ETC.), LIMITED TO ONE ANCHOR PER CELL.

HILTI HIT-HY 70 ADHESIVE (ESR-2682) (FACE OF CMU)					
INSTALLATION ITEMS	UNITS	THREADED ROD DIAMETER (IN)			
		3/8	1/2	5/8	3/4
DRILL BIT DIA	IN	7/16	2/16	3/4	7/8
MIN EMBED (VON)	IN	3-3/8	4-1/2	5-5/8	6-3/4
MIN EDGE DIST (VON)	IN	12	12	30	20
MIN SPACING (VON)	IN	13-1/2	18	22-1/2	27
ALLOWABLE TENSION	LBS	1240	2005	2840	3810
ALLOWABLE SHEAR	LBS	850	1495	2615	4060
TENSION TEST LOAD (VON)	LBS	2240	4070	5680	7620

5. TEST LOADS AND FREQUENCY: SPECIFIC TEST LOADING CRITERIA SHALL BE AS SHOWN BELOW.
   A) ALL ANCHORS SHALL BE TESTED, UNO HEREIN.
   B) SILL BOLTS: TEST 10% OF ANCHORS.
   C) NONSTRUCTURAL APPLICATIONS SUCH AS EQUIPMENT ANCHORAGE: TEST 50% OF ANCHORS OR ALTERNATE BOLTS IN A GROUP, INCLUDING AT LEAST ONE-HALF THE ANCHORS IN EACH GROUP.
   D) IF ANY ANCHOR FAILS TESTING, ALL ANCHORS OF THE SAME TYPE SHALL BE TESTED, WHICH ARE INSTALLED BY THE SAME TRADE, NOT PREVIOUSLY TESTED UNTIL TWENTY (20) CONSECUTIVE ANCHORS PASS, THEN RESUME THE INITIAL TESTING FREQUENCY.

6. TEST ACCEPTANCE CRITERIA:
   A) HYDRAULIC RAM METHOD: ANCHORS TESTED WITH A HYDRAULIC JACK OR SPRING LOADED DEVICES SHALL MAINTAIN THE TEST LOAD FOR A MINIMUM OF 15 SECONDS AND SHALL EXHIBIT NO DISCERNABLE MOVEMENT DURING THE TENSION TEST, E.G., AS EVIDENCED BY LOOSENING OF THE WASHER UNDER THE NUT. THE TESTING DEVICE SHALL NOT RESTRICT THE CONCRETE SHEAR CONE TYPE FAILURE MECHANISM FROM OCCURING.

7. DO NOT INSTALL EPOXY ADHESIVE ANCHORS IN MASONRY UNTIL IT HAS REACHED ITS MINIMUM SPECIFIED COMPRESSIVE STRENGTH.

8. EPOXY ADHESIVE SHALL BE FULLY CURED BEFORE THE APPLICATION OF TENSION.

9. PERIODIC SPECIAL INSPECTION IS REQUIRED AND SHALL IN ACCORDANCE WITH THE VALID ICC EVALUATION REPORT. INITIAL INSPECTION IS REQUIRED FOR EACH DIFFERENT SUBCONTRACTOR. THE SPECIAL INSPECTOR SHALL VERIFY ANCHOR TYPE, ANCHOR DIMENSIONS, MASONRY TYPE, MASONRY COMPRESSIVE STRENGTH, DRILL BIT SIZE, ADHESIVE IDENTIFICATION AND EXPIRATION DATE, HOLE DIMENSIONS, HOLE CLEANING PROCEDURES, ANCHOR SPACING, EDGE DISTANCES, ANCHOR EMBEDMENT AND MANUFACTURER'S PUBLISHED INSTALLATION PROCEDURE. ANY CHANGE IN THE ANCHOR PRODUCT BEING INSTALLED OR THE PERSONNEL PERFORMING THE INSTALLATION WILL REQUIRE AN INITIAL INSPECTION.

ABBREVIATIONS

AB	ANCHOR BOLT
ABV	ABOVE
ADDL	ADDITIONAL
ADJ	ADJACENT
ALT	ALTERNATE
ARCH	ARCHITECTURAL/ ARCHITECT
(B)	BOTTOM
BLK	BLOCK
BLKG	BLOCKING
BLW	BELOW
BM	BEAM
BN	BOUNDARY NAIL
B.O.F	BOTTOM OF FOOTING
BP	BASE PLATE
BRG	BEARING PLATE
BTWN	BETWEEN
C	CAMBER
CB	CARRIAGE BOLT
CIP	CAST-IN-PLACE
CJ	CONSTRUCTION JOINT/CEILING JOIST
CL	CENTER LINE
CLR	CLEAR
CMU	CONCRETE MASONRY UNIT
COL	COLUMN
CONC	CONCRETE
CONN	CONNECTION
CONST	CONSTRUCTION
CONT	CONTINUOUS
CP	COMPLETE PENETRATION
CSK	COUNTERSINK
CTRD	CENTERED
DBL	DOUBLE
DF	DOUGLAS FIR/LARCH
DIA	DIAMETER
DIM	DIMENSION
DN	DOWN
DO	DITTO (REPEAT)
DP	DEEP
DWG	DRAWING
DWL	DOWEL
(E)	EXISTING
EA	EACH
EF	EACH FACE
EL	ELEVATION
ELEC	ELECTRICAL
ELEV	ELEVATOR
EMBED	EMBEDMENT
EN	EDGE NAIL
EQ	EQUAL/EQUIVALENT
ES	EACH SIDE
EW	EACH WAY
EXP	EXPANSION
FDN	FOUNDATION
FF	FINISH FLOOR
FJ	FLOOR JOIST
FLG	FLANGE
FLR	FLOOR
FN	FIELD NAIL
FO	FACE OF
FOC	FACE OF CONCRETE
FOM	FACE OF MASONRY
FOS	FACE OF STUD
FRMG	FRAMING
FS	FAR SIDE
FTG	FOOTING
GA	GAGE
GALV	GALVANIZED
GLB	GLUED LAMINATED BEAM
GR	GRADE
(H)	HORIZONTAL
HD	HOLDOWN
HDR	HEADER
HGR	HANGER
HORIZ	HORIZONTAL
HSB	HIGH STRENGTH BOLT
HSH	HORIZONTALLY SLOTTED HOLES
HT	HEIGHT
I.F.	INSIDE FACE
JST	JOIST
JT	JOINT
KP	KING POST
LDGR	LEDGER
LOC	LOCATION
LT WT	LIGHTWEIGHT
MATL	MATERIAL
MAX	MAXIMUM
MB	MACHINE BOLT
MECH	MECHANICAL
MFR	MANUFACTURER
MIN	MINIMUM
MISC	MISCELLANEOUS
MTL	METAL
(N)	NEW
NIC	NOT IN CONTRACT
NS	NEAR SIDE
NTS	NOT TO SCALE
O.F.	OUTSIDE FACE
OH	OPPOSITE HAND
OPNG	OPENING
OPP	OPPOSITE
PC	PRECAST
PL	PLATE
PLCS	PLACES
PLYWD	PLYWOOD
PP	PARTIAL PENETRATION
PT	PRESSURE TREATED
PW	PLATE WASHER
R	RADIUS
REINF	REINFORCEMENT
REQD	REQUIRED
REF	REFERENCE
SCHED	SCHEDULE
SEP	SEPARATION
SIM	SIMILAR
SMS	SHEET METAL SCREW
SPEC	SPECIFICATION
SQ	SQUARE
STD	STANDARD
STGR	STAGGER
STIFF	STIFFENER
STL	STEEL
STRUCT	STRUCTURAL
(T)	TOP
T&B	TOP AND BOTTOM
TG	TAPERED GIRDER
THK	THICK/THICKNESS
THRD	THREADED
TN	TOENAIL
T.O.C	TOP OF CONCRETE
T.O.P	TOP OF PARAPET
T.O.S	TOP OF STEEL
T.O.W	TOP OF WALL
TS	TUBE STRUCTURAL
TSW	TOP SEAM WELD
TYP	TYPICAL
UON	UNLESS OTHERWISE NOTED
(V)	VERTICAL
VERT	VERTICAL
VSH	VERTICALLY SLOTTED HOLES
W/	WITH
W/O	WITHOUT
WD	WOOD
WP	WATERPROOF/ WORK POINT
WPJ	WEAKENED PLANE JOINT
WT	WEIGHT
WWF	WELDED WIRE FABRIC

17005.00

SDSE
619.297.3203 • FAX 619.297.4913
www.sdse.com

PREPARED FOR THE
GROSSMONT UNION HIGH SCHOOL DISTRICT
P.O.BOX 1043
LA MESA, CALIFORNIA

PREPARED BY
PLATT/WHITELAW ARCHITECTS, INC.
4094 30TH STREET
SAN DIEGO, CA (619)549-4950 FAX (619)549-4950

CERTIFICATION OF DSA OFFICE OF REGULATION
04-115630
FILE 03-14
AC. FLG. 06
DATE 04 27 17

GENERAL NOTES
BOILER/CHILLER REPLACEMENT

CENTRAL PLANT EQUIPMENT UPGRADE

VALHALLA HIGH SCHOOL
1725 HILLSDALE ROAD
EL CAJON, CA 92019

REVISION	DATE

PROJECT NO. PWA.#0361.10

FILE NAME:

DATE: 4/26/2017 DRAWN: RD CHECKED: DPK

S1.1

SHEET NO.: OF SHEETS

J:\pwa\PWA\17005.00 VALHALLA CENTRAL PLANT\dwg\S1.1.dwg 04/26/2017 13:38

RFI #16 Revision

(12, DA-09)

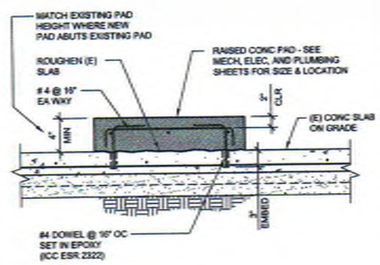

HOUSEKEEPING PAD (5)

(12, D01)

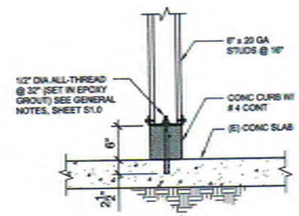

DETAIL (1) 1" = 1'-0" TYP UON

(12, D06)

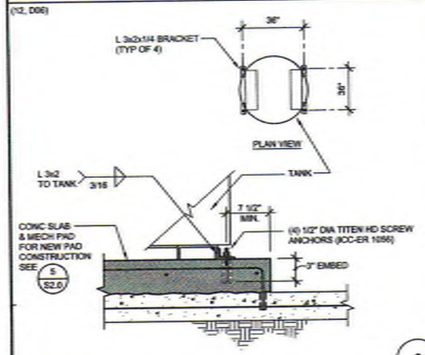

BUFFER TANK (6)

(12, D02)

NOTE: LOCATE REINFORCING IN WALL PRIOR TO DRILLING TO AVOID CUTTING EXISTING REINFORCEMENT

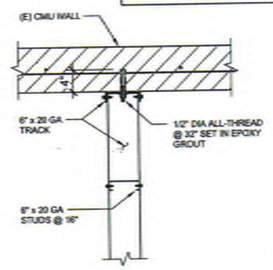

PLAN VIEW (2)

(12, D07)

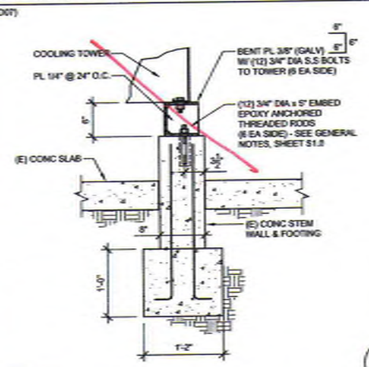

DETAIL (7)

(12, D03)

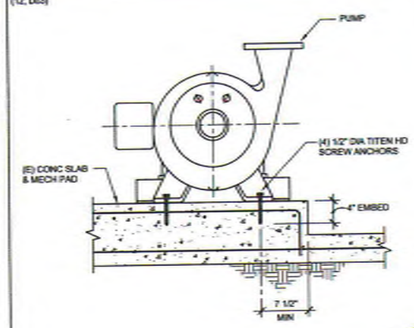

DETAIL (3)

(12, D08)

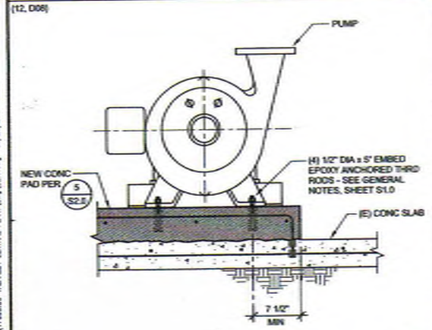

DETAIL (8)

(8, MS-FR21)

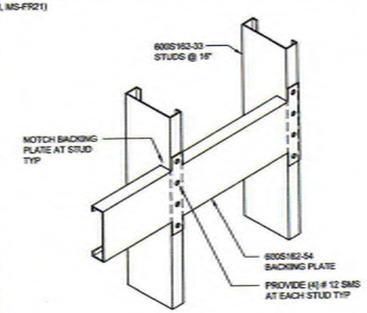

BACKING PLATE (4) 1 1/2" = 1'-0"

(12, BOILER)

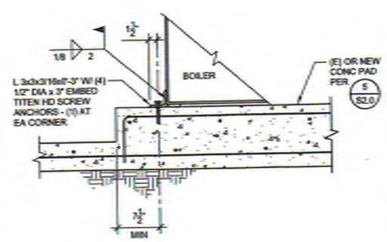

DETAIL (9) 1" = 1'-0"

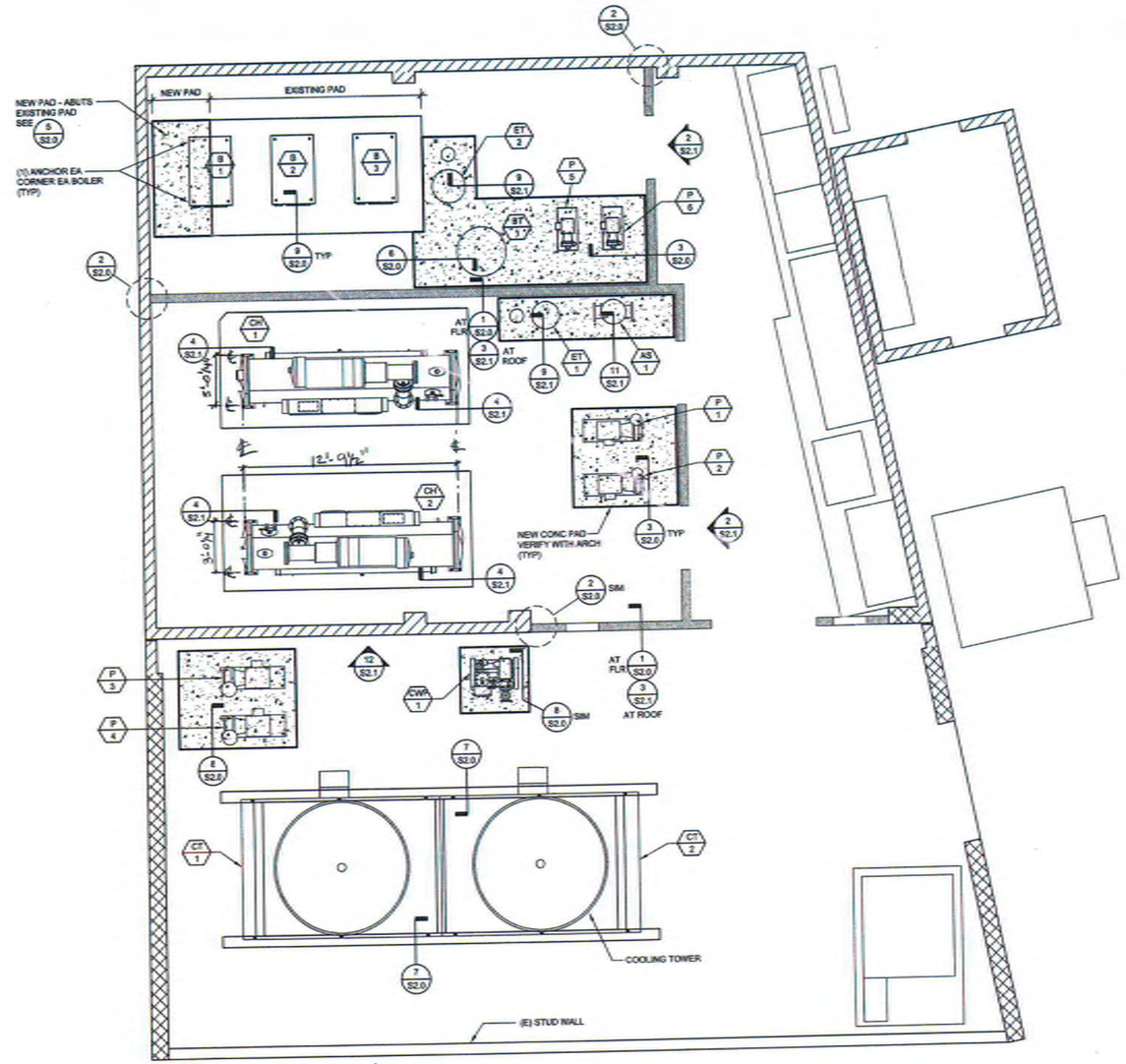

LEGEND:

- EXISTING CMU WALL
- NEW 600S162-33 STEEL STUDS @ 16"
- NEW CONCRETE PAD, SEE (5/S2.0)

NOTES:

1. FOR FLOOR MOUNTED PIPE SUPPORT, SEE DETAIL (10/S2.1)

MECHANICAL ROOM PLAN

SCALE: 1/4" = 1'-0"

NORTH

SDSE

17005.00

PREPARED FOR THE
GROSSMONT UNION HIGH SCHOOL DISTRICT
P.O.BOX 1048
LA MESA, CALIFORNIA

PREPARED BY
PLATT/WHITELAW ARCHITECTS, INC.
4034 30TH STREET
SAN DIEGO, CA (619)546-4920 FAX (619)546-4920

DIV. STATE ARCHITECT
OFFICE OF REGULATION SERVICES
04-105930
FILE #01-144
AC
DATE 04 27 17

MECHANICAL ROOM PLAN & DETAILS
BOILER/CHILLER REPLACEMENT
CENTRAL PLANT EQUIPMENT UPGRADE

VALHALLA HIGH SCHOOL
1725 HILLSDALE ROAD
EL CAJON, CA 92019

REVISION	DATE

PROJECT NO. PWA #0361.10

FILE NAME:

DATE: 4/26/2017 DRAWN: RD CHECKED: DPK

S2.0

SHEET NO.: OF SHEETS

J:\aaa\proj\17005.00 VALHALLA CENTRAL PLANT\dwg\S2.0.dwg 04/26/2017 15:36

(12, 03TD31)

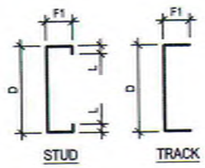

COLD FORMED STEEL STUD NOTES:

1. ALL SECTIONS SHALL BE MANUFACTURED IN ACCORDANCE WITH THE LATEST AISI SPECIFICATION AND ESR-3064P.
2. BENT, KINKED, DISTORTED OR DAMAGED SECTIONS SHALL NOT BE USED.
3. STUDS MAY HAVE 1 1/2" x 4" WEB CUT-OUTS @ 24". CUT-OUTS SHALL NOT BE CLOSER THAN 12" FROM SECTION ENDS UON.
4. BOX HEADER AND JAMB STUDS SHALL BE UNPLUNCHED, WORK WITH (2/S2.1)
5. SECTION PROPERTIES ARE BASED UPON THE "STEEL STUD MANUFACTURER'S ASSOCIATION" (SSMA) CATALOG OF PRODUCERS.
6. USE: 400S162-43 @ 16" UON WHERE 4" STUDS ARE SPECIFIED
   USE: 400T125-43 WHERE 4" TRACKS ARE SPECIFIED UON
   USE: 600S162-43 @ 16" UON WHERE 6" STUDS ARE SPECIFIED
   USE: 600T125-43 WHERE 6" TRACKS ARE SPECIFIED UON
   USE: 800S162-43 @ 16" UON WHERE 8" STUDS ARE SPECIFIED
   USE: 800T125-43 WHERE 8" TRACKS ARE SPECIFIED UON

FASTENER NOTES:

1. FASTENERS SHALL BE HILTI BRAND AS MANUFACTURED BY HILTI, INC. OR APPROVED EQUAL.

	MARK	GA	DESIGN THK	DIMENSIONS IN INCHES			EFFECTIVE SECTION PROPERTIES		Fy (ksi)
				L	D	F1	Ix in⁴	S in³	
COLD FORMED STEEL STUDS	400S125-33	20	0.0346	0.188"	4.000"	1.250"	0.524	0.203	33
	600S125-33	20	0.0346	0.188"	6.000"	1.250"	1.361	0.369	33
	250S137-33	20	0.0346	0.375"	2.500"	1.375"	0.203	0.158	33
	362S137-33	20	0.0346	0.375"	3.625"	1.375"	0.479	0.232	33
	600S137-33	20	0.0346	0.375"	6.000"	1.375"	1.548	0.455	33
	400S162-43	18	0.0451	0.500"	4.000"	1.625"	0.892	0.417	33
	400S162-68	14	0.0713	0.500"	4.000"	1.625"	1.346	0.658	50
	600S162-33	20	0.0346	0.500"	6.000"	1.625"	1.793	0.577	33
	600S162-43	18	0.0451	0.500"	6.000"	1.625"	2.316	0.767	33
	600S162-54	16	0.0566	0.500"	6.000"	1.625"	2.860	0.916	50
	600S162-68	14	0.0713	0.375"	6.000"	1.625"	3.525	1.164	50
	600S137-68	14	0.0713	0.500"	6.000"	1.375"	3.094	1.030	50
	800S162-54	16	0.0566	0.500"	8.000"	1.625"	5.600	1.229	50
	1000S200-54	16	0.0566	0.625"	10.000"	2.000"	10.768	1.705	50
TRACKS	250T125-33	20	0.0346	-	2.50"	1.250"	0.186	0.103	33
	362T125-33	20	0.0346	-	3.625"	1.250"	0.384	0.174	33
	600T125-33	20	0.0346	-	6.0"	1.250"	1.258	0.297	33
	400T125-43	18	0.0451	-	4.0"	1.250"	0.666	0.282	33
	600T125-43	18	0.0451	-	6.0"	1.250"	1.768	0.481	33
	600T125-54	16	0.0566	-	6.0"	1.250"	2.241	0.592	50
	800T125-43	18	0.0451	-	8.0"	1.250"	3.484	0.640	33

METAL TO METAL FASTENER SIZE (UON)	
METAL THICKNESS 'T'	SCREW TYPE
T < 12 GA	# 10 HWH W/ # 2 POINT
12 GA < T < 1/8"	1/4-14 W/ # 3 POINT 1/8-1/4 # 12-24 HWH # 4 POINT
1/4" < T < 1/2"	#12-24 HWH # 5 POINT
METAL TO WOOD FASTENER SIZE	
METAL THICHNESS 'T'	SCREW TYPE
T < 12 GA	# 10 PFH W/ # 3 POINT

COLD FORMED STEEL STUD PROPERTIES (15)

(8, S01)

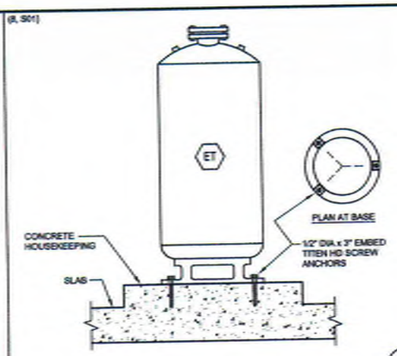

EXPANSION TANK MOUNTING (9)

(8, S02)

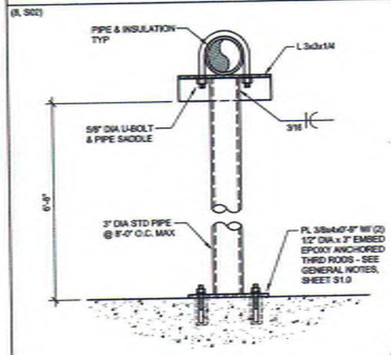

FLOOR MOUNTED PIPING SUPPORT (10)

(8, S03)

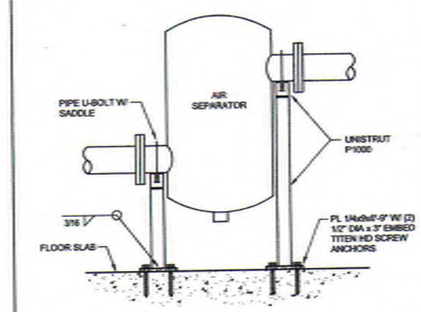

AIR SEPARATOR MOUNTING (11)

(32, MS-FR14)

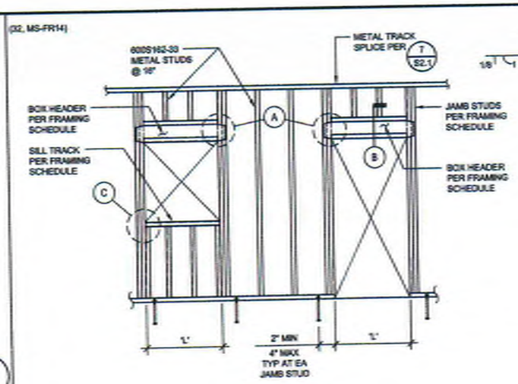

WALL ELEVATION

FRAMING SCHEDULE					
WALL TYPE	SPAN LENGTH 'L'	BOX HEADER		JAMB STUDS	NO. # 10 WAFER HEAD SMS AT EA JST TO JAMB
		DBL JST	TRACK		
6" STUDS	8' TO 9'-0"	2 - 600S162-43	2 - 600T125-43	2 - 600S162-43	4
	9'-0" TO 10'-0"	2 - 600S162-54	2 - 600T125-54	2 - 600S162-54	4
	10'-1" TO 12'-0"	2 - 600S162-68	2 - 600T125-54	2 - 600S162-68	4

NOTES:
1. METAL STUD WALL FRAMING MEMBERS SHALL BE IN ACCORDANCE WITH ER #4943P.
2. FOR STUD SECTION PROPERTIES, SEE (15/S2.1)

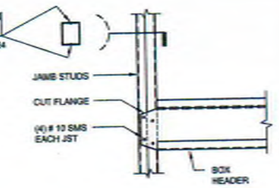

A HEADER CONNECTION

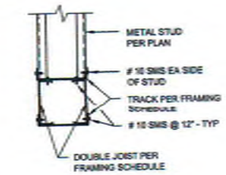

B BOX HEADER

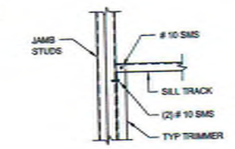

C SILL CONNECTION

METAL STUD WALL FRAMING (2)

(12, MS-FR05)

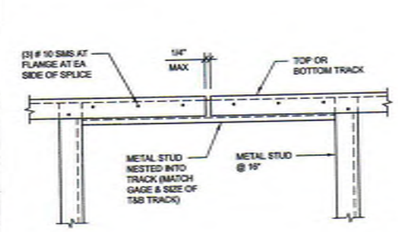

TRACK SPLICE (7)

(12, MS-FR11)

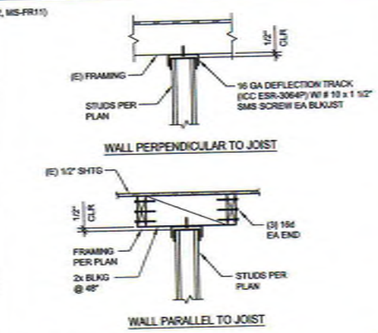

TOP CONN AT NON-BRG/NON-SHEAR WALLS (3)

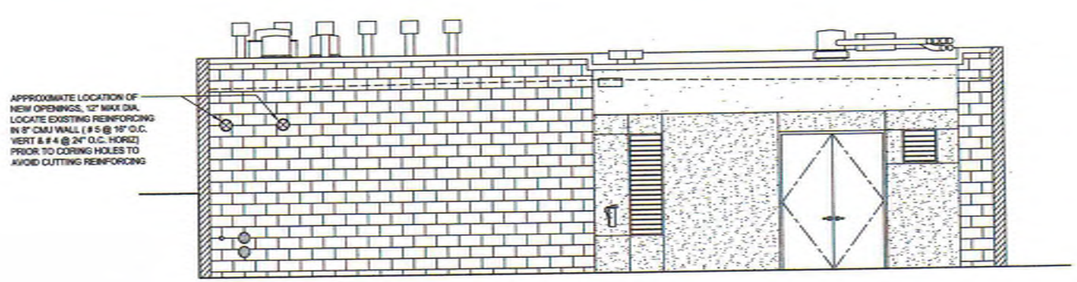

EXISTING COURTYARD WALL ELEVATION (12)

(12, 15TD12)

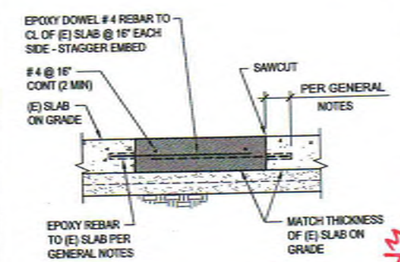

SLAB INFILL (8)

(12, CHILLER)

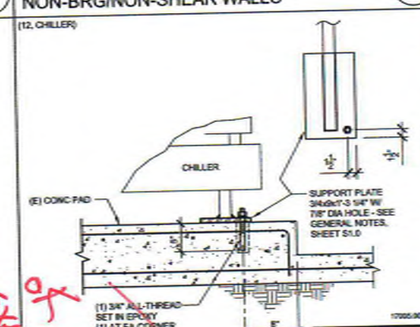

DETAIL (4)

SDSE

PREPARED FOR THE
GROSSMONT UNION HIGH SCHOOL DISTRICT
P.O.BOX 1043
LA MESA, CALIFORNIA

PREPARED BY
PLATT/WHITELAW ARCHITECTS, INC.
4034 30TH STREET
SAN DIEGO, CA (619)546-4928 FAX (619)546-4950

CERTIFICATION STAMP
DIV. OF THE STATE ARCHITECT
OFFICE OF REGULATION SERVICES
04-115930 FILE 107-144
FS 86
AC
DATE 042717

DETAILS
BOILER/CHILLER REPLACEMENT
CENTRAL PLANT EQUIPMENT UPGRADE
VALHALLA HIGH SCHOOL
1725 HILLSDALE ROAD
EL CAJON, CA 92019

REVISION	DATE

PROJECT NO. PWA.#0361.10
FILE NAME:
DATE: 4/26/2017 DRAWN: RD CHECKED: DPK

S2.1

SHEET NO.: OF SHEETS

MECHANICAL LEGEND

SINGLE LINE SYMBOL	DOUBLE LINE SYMBOL	ABBREV.	DESCRIPTION
			EXISTING HVAC TO REMAIN
			EXISTING HVAC TO BE REMOVED
20"x12"	20"x12"		DUCT - 1ST DIM. SIDE SHOWN - 2ND DIM. NOT SHOWN INSIDE CLEAR DIMS. IN INCHES Φ - ROUND DUCT INSIDE CLEAR DIAMETER IN INCHES
			DIRECTION OF AIR FLOW
UP/DN	UP/DN		DUCT RISES OR DROPS IN DIRECTION OF ARROW
			DUCT TRANSITION
			DUCT CAP
		MVD	MANUAL VOLUME DAMPER
BDD	BDD	BDD	BACKDRAFT DAMPER
MD	MD	MD	MOTORIZED DAMPER
AP		AP	ACCESS PANEL OR CLEANOUT
F	F	FD	FIRE DAMPER 1-1/2 HOUR RATED UNLESS OTHERWISE NOTED
		FSD	FIRE SMOKE DAMPER 1-1/2 HOUR RATED UNLESS OTHERWISE NOTED
			SQUARE ELBOW W/TURNING VANES
			RADIUS ELBOW
			SUPPLY OR OUTSIDE AIR DUCT UP
			SUPPLY OR OUTSIDE AIR DUCT DOWN
			RETURN AIR DUCT UP
			RETURN AIR DUCT DOWN
			EXHAUST AIR DUCT UP
			EXHAUST AIR DUCT DOWN
			ROUND DUCT UP
			ROUND DUCT DOWN
T	T		DUCT TEMPERATURE SENSOR
SD	SD		DUCT SMOKE DETECTOR
			FLEXIBLE CONNECTION
20"x12"	20"x12"		LINED DUCT - INSIDE CLEAR DIMENSIONS SHOWN
			SUPPLY AIR TAKEOFF WITH DAMPER
			RETURN/EXHAUST AIR TAKEOFF WITH DAMPER
			RECTANGULAR SUPPLY DIFFUSER FOUR-WAY AIRFLOW DIRECTION UNLESS OTHERWISE NOTED
			RECTANGULAR RETURN GRILLE
			RECTANGULAR EXHAUST GRILLE
			ROUND SUPPLY DIFFUSER

MECHANICAL LEGEND

SINGLE LINE SYMBOL	DOUBLE LINE SYMBOL	ABBREV.	DESCRIPTION
			SIDEWALL REGISTER (SUPPLY)
			SIDEWALL REGISTER (RETURN OR EXHAUST)
		POC	POINT OF CONNECTION
		POD	POINT OF DISCONNECTION
			KEYNOTE
RL			REFRIGERANT LIQUID
RS			REFRIGERANT SUCTION
CHWS			CHILLED WATER SUPPLY
CHWR			CHILLED WATER RETURN
HWS			HEATING HOT WATER SUPPLY
HWR			HEATING HOT WATER RETURN
			PUMP
			PIPE TURNING DOWN
			PIPE TURNING UP
			VALVE ON RISE OR DROP
			CAPPED PIPE END
			CONCENTRIC REDUCER
			ECCENTRIC REDUCER
			UNION
			TEMPERATURE GAUGE
			PRESSURE GAUGE
			PRESSURE/TEMPERATURE PORT
			MANUAL ISOLATION VALVE
			MANUAL ISOLATION VALVE W/ BLIND FLANGE
			PIPE MOUNTED TEMPERATURE SENSOR
			PIPE MOUNTED FLOW SWITCH
DP			PIPE MOUNTED DIFFERENTIAL PRESSURE SENSOR
	T		ROOM WALL MOUNTED TEMPERATURE SENSOR OR THERMOSTAT
	S		WALL MOUNTED SWITCH

ABBREVIATIONS

ABBREV.	DESCRIPTION	ABBREV.	DESCRIPTION
AFF	ABOVE FINISHED FLOOR	FT	FEET
AMB	AMBIENT	FF	FINISHED FLOOR
APD	AIR PRESSURE DROP	FG	FINISHED GRADE
ARCH	ARCHITECTURAL	FLA	FULL LOAD AMPERES
BDD	BACKDRAFT DAMPER	FPI	FINS PER INCH
BHP	BRAKE HORSEPOWER	FPM	FEET PER MINUTE
BTUH	BTU PER HOUR	FPS	FEET PER SECOND
CD	CONDENSATE DRAIN	FT	FEET
CFM	CUBIC FEET PER MINUTE	FV	FACE VELOCITY
CONT	CONTINUATION	GA	GAUGE
CP	CONTROL PANEL	GPM	GALLONS PER MINUTE
DB	DRY BULB	H	HEIGHT
DIA, Φ	DIAMETER	HD	FEET OF WATER
DX	DIRECT EXPANSION (REFRIGERANT)	HP	HORSEPOWER
EA	EXHAUST AIR	HR	HOUR
EAT	ENTERING AIR TEMPERATURE	ID	INSIDE DIAMETER
EDB	ENTERING DRY BULB TEMPERATURE	IN	INCHES
EER	ENERGY EFFICIENCY RATIO	LAT	LEAVING AIR TEMPERATURE
EFF	EFFICIENCY	L	LENGTH
ELEC	ELECTRICAL	LB	POUNDS
ENT	ENTERING	LDB	LEAVING DRY BULB TEMPERATURE
ESP	EXTERNAL STATIC PRESSURE	LWB	LEAVING WET BULB TEMPERATURE
EWB	ENTERING WET BULB TEMPERATURE	LWT	LEAVING WATER TEMPERATURE
EWT	ENTERING WATER TEMPERATURE	MAX	MAXIMUM
EX	EXISTING	MBH	THOUSAND BTU PER HOUR
FA	FREE AREA	MCA	MINIMUM CIRCUIT AMPACITY

ABBREVIATIONS

ABBREV.	DESCRIPTION
MIN	MINIMUM
NC	NORMALLY CLOSED
NO	NORMALLY OPEN
NPSH	NET POSITIVE SUCTION HEAD
NTS	NOT TO SCALE
OA	OUTSIDE AIR
OD	OUTSIDE DIAMETER
OV	OUTLET VELOCITY
PD	PRESSURE PROP
PLBG	PLUMBING
PRV	PRESSURE REDUCING VALVE
PSI	POUNDS PER SQUARE INCH
PSIG	PSI GAUGE
QTY	QUANTITY
RA	RETURN AIR
RH	RELATIVE HUMIDITY
RPM	REVOLUTIONS PER MINUTE
SA	SUPPLY AIR
SS	STAINLESS STEEL
STRUCT	STRUCTURAL
TDH	TOTAL DYNAMIC HEAD
TG	TRANSFER GRILLE
TSP	TOTAL STATIC PRESSURE
TYP	TYPICAL
UNO	UNLESS NOTED OTHERWISE
UTR	UP THROUGH ROOF
V/PH/HZ	VOLTS, PHASE, HERTZ
VD	VOLUME DAMPER
W	WIDTH
W	WITH
WB	WET BULB
WG	WATER GAUGE
WPD	WATER PRESSURE DROP

DESCRIPTION OF TAGS

S-1 / 800 — REGISTER/DIFFUSER TYPES; CFM

REGISTER OR DIFFUSER TAG

AH / 2 — EQUIPMENT TYPE; UNIT NUMBER

EQUIPMENT TAG

1 / M-1 — DETAIL NUMBER; SHEET NUMBER

DETAIL CALL OUT

A / M-1 — DETAIL NUMBER; SHEET NUMBER

SECTION CALL OUT

GENERAL NOTES

1. ALL WORK SHALL COMPLY WITH THE 2016 EDITION OF THE CALIFORNIA BUILDING, MECHANICAL, PLUMBING, AND OTHER APPLICABLE FEDERAL, STATE, AND LOCAL CODES AS ADOPTED AND ENFORCED BY THE LOCAL JURISDICTION HAVING AUTHORITY. IN CASE THE PLANS SHOW MORE STRINGENT REQUIREMENTS, THE PLANS SHALL GOVERN THE DESIGN, HOWEVER THE DESIGN DOCUMENTS SHALL NOT BE INTERPRETED AS AUTHORITY TO VIOLATE CODE(S) OR REGULATION(S).
2. SUBMISSION OF BID IN CONNECTION WITH THIS WORK SHALL IMPLY THAT THE BIDDER HAS EXAMINED THE JOB SITE UNDER WHICH THE CONTRACTOR WILL BE OBLIGATED TO OPERATE UNDER THIS CONTRACT. NO EXTRA CHARGE WILL BE ALLOWED FOR FAILURE OF ANY BIDDER TO EXAMINE THE SITE PRIOR TO BID.
3. WHERE USED, THE TERM "PROVIDE" SHALL MEAN "FURNISH AND INSTALL".
4. IN THE EVENT OF A CONFLICT OR INCONSISTENCY BETWEEN ITEMS INDICATED ON DESIGN PLANS/SPECIFICATIONS WITH CODE REQUIREMENTS, THE MORE STRINGENT STANDARD SHALL PREVAIL.
5. CONTRACTOR SHALL FURNISH LABOR, MATERIALS, EQUIPMENT, APPURTENANCES, AND TRANSPORTATION AS REQUIRED TO PROPERLY INSTALL ALL HVAC SYSTEMS OR RELATED COMPONENTS AS INDICATED ON PLANS AND SPECIFIED HEREIN.
6. ALL EQUIPMENT, MATERIAL AND APPURTENANCES TO BE INSTALLED AS PART OF THE PROJECT SHALL BEAR AN UNDERWRITERS LABORATORIES LABEL (U.L.), AND INSTALLED IN SUCH A MANNER FOR WHICH THEY ARE DESIGNED AND APPROVED.
7. CONTRACTOR SHALL DOCUMENT AND RELAY ANY MAJOR DEVIATIONS FROM THE DESIGN DOCUMENTS, AND ATTAIN APPROVAL FROM THE OWNER/DESIGN TEAM BEFORE PROCEEDING. CONTRACTOR SHALL PROVIDE AS-BUILT COPIES INDICATING ALL CHANGES/DEVIATIONS MADE DURING CONSTRUCTION.
8. ALL WORK SHALL BE PERFORMED IN A CLEAN AND WORKMANLIKE MANNER. CARE SHALL BE EXERCISED TO MINIMIZE ANY CONVENIENCE OR DISTURBANCE TO OTHER AREAS OF THE BUILDING WHICH ARE TO REMAIN IN OPERATION. ISOLATE WORK AREAS BY MEANS TO KEEP DUST AND DIRT WITHIN THE CONSTRUCTION AREA.
9. NO PIPING, EQUIPMENT, ETC. SHALL BE REMOVED, DISCONNECTED OR SHUT DOWN WITHOUT PRIOR REVIEW WITH THE OWNER'S REPRESENTATIVE TO CONFIRM THAT AREAS TO REMAIN IN OPERATION WILL NOT BE AFFECTED. IF ANY AREAS NOT WITHIN THE SCOPE OF WORK ARE AFFECTED BY ANY SHUTDOWN, REMOVAL OR DISCONNECTION, SUFFICIENT ADVANCE NOTICE MUST BE GIVEN TO THE OWNER'S REPRESENTATIVE INDICATING WHICH AREAS WILL BE AFFECTED, WHEN THE PROPOSED SHUTDOWN WILL OCCUR, AND FOR HOW LONG A PERIOD OF TIME.
10. THE ARRANGEMENT OF EQUIPMENT AND PIPING SHOWN ON THE DRAWINGS IS BASED UPON INFORMATION AVAILABLE TO THE ENGINEER AT THE TIME OF DESIGN AND IS NOT INTENDED TO SHOW EXACT DIMENSIONS PARTICULAR TO A SPECIFIC MANUFACTURER. THE DRAWINGS ARE, IN PART, DIAGRAMMATIC, AND SOME FEATURES OF THE ILLUSTRATED EQUIPMENT INSTALLATION MAY REQUIRE REVISION TO MEET ACTUAL EQUIPMENT INSTALLATION REQUIREMENTS. STRUCTURAL SUPPORTS, FOUNDATIONS, CONNECTED PIPING, VALVES, PIPE SUPPORTS AND ELECTRICAL CONDUIT SPECIFIED MAY HAVE TO BE ALTERED OR ADDITIONAL ITEMS REQUIRED TO ACCOMMODATE THE EQUIPMENT PROVIDED. NO ADDITIONAL PAYMENT WILL BE MADE FOR SUCH REVISIONS, ALTERATIONS, AND/OR ADDITIONS.
11. CONTRACTOR SHALL VERIFY ALL DIMENSIONS AT THE SITE MAKING FIELD MEASUREMENTS AND SHOP DRAWINGS NECESSARY FOR FABRICATION OR INSTALLATION OF HVAC AND PIPING SYSTEMS. MAKE ALLOWANCE FOR BEAMS, PIPES, AND OTHER OBSTRUCTIONS IN BUILDING CONSTRUCTION. CHECK DRAWINGS SHOWING WORK OF OTHER TRADES AND CONSULT WITH THE OWNER'S REPRESENTATIVE IN THE EVENT OF POTENTIAL INTERFERENCE. SHOP DRAWINGS SHALL BE MINIMUM 1/4"=1'-0" SCALE, INDICATING FITTINGS, SIZES, HELDS, AND CONFIGURATIONS AND SUBMITTED IN THE LATEST VERSION OF AUTOCAD TO THE ENGINEER FOR REVIEW.
12. CONTRACTOR SHALL COORDINATE HIS WORK WITH ALL OTHER TRADES PRIOR TO FABRICATION, PURCHASE, AND/OR INSTALLATION OF ALL WORK.
13. BEFORE COMMENCEMENT OF WORK, CONTRACTOR SHALL VERIFY THE EXACT LOCATIONS, ELEVATIONS, AND CHARACTERISTICS OF ALL UTILITIES.
14. EXISTING MATERIALS THAT ARE REMOVED SHALL NOT BE REUSED IN NEW SYSTEMS, EXCEPT WHERE INDICATED AS BEING RELOCATED.
15. ALL EQUIPMENT SHALL BE INSTALLED IN STRICT COMPLIANCE WITH THE MANUFACTURER'S WRITTEN INSTRUCTIONS.
16. GALVANIZED SHEET METAL SHALL BE PROVIDED FOR ALL HVAC DUCT SYSTEMS (EXCEPT WHERE ANOTHER MATERIAL IS INDICATED), AND SHALL BE CONSTRUCTED/SUPPORTED/INSTALLED IN ACCORDANCE WITH THE LATEST EDITION OF THE CALIFORNIA MECHANICAL CODE AND THE LATEST SMACNA STANDARDS.
17. ALL PIPING SHALL BE INSTALLED AS INDICATED ON THE DRAWINGS IN A CLEAN AND WORKMANLIKE MANNER AND BE SUPPORTED AS REQUIRED BY CODES. PIPING SHALL BE SET UP AND DOWN AND OFFSET AS REQUIRED TO SUIT FIELD CONDITIONS. DIELECTRIC COUPLINGS SHALL BE USED WHERE DISSIMILAR METALS ARE JOINED.
18. CONTRACTOR SHALL PROVIDE ALL NECESSARY SUPPORTS FOR FIXTURES, DUCTWORK, PIPING, AND MECHANICAL EQUIPMENT IN ORDER TO COMPLY WITH SEISMIC REQUIREMENTS AS OUTLINED BY THE LATEST EDITION(S) OF THE CALIFORNIA BUILDING CODE, SMACNA INSTALLATION STANDARDS, AND ALL RELATED LOCAL ORDINANCES.
19. PIPING AND DUCT SUPPORTS SHALL BE AS FOLLOWS:
    ALL BRACING OF DUCTS AND PIPING SHALL BE INSTALLED IN ACCORDANCE WITH SMACNA GUIDELINES OR, AS DETAILED AND SPECIFIED HEREIN. WHERE BRACING DETAILS ARE NOT SHOWN ON THE DRAWINGS OR IN THE GUIDELINES, THE FIELD INSTALLATION SHALL BE SUBJECT TO THE APPROVAL OF THE MECHANICAL ENGINEER. A COPY OF THE GUIDELINES PUBLISHED BY SMACNA SHALL BE PROVIDED BY THE CONTRACTOR AND KEPT ON THE JOB AT ALL TIMES.
20. CONTRACTOR SHALL NOT BORE, NOTCH, CUT, OR PENETRATE INTO A STRUCTURAL MEMBER WITHOUT WRITTEN APPROVAL FROM THE STRUCTURAL ENGINEER OF RECORD AND DSA.
21. ISOLATE AND DRAIN EXISTING PIPING SYSTEM AS REQUIRED TO ACCOMMODATE INSTALLATION OF THE WORK.
22. LOCATE TEMPERATURE SENSING INSTRUMENTS AT PIPING ELBOWS AND TURBULENT AREAS OF MECHANICAL EQUIPMENT WHERE THE VELOCITY LIMITATIONS WILL NOT BE EXCEEDED.
23. PRIOR TO OCCUPANCY, ALL HVAC SYSTEMS SHALL BE BALANCED IN ACCORDANCE WITH AABC OR NEBB STANDARDS AND ALL CONTRACT DOCUMENTS BY AN INDEPENDENT AIR BALANCE CONTRACTOR. CONTRACTOR SHALL PROVIDE CERTIFICATION OF OUTSIDE AIR VENTILATION RATES AND THAT ALL SYSTEMS HAVE BEEN BALANCED IN ACCORDANCE WITH THE CONTRACT DOCUMENTS.
24. ALL FLEXIBLE DUCTWORK SHALL NOT EXCEED 7'-0" IN LENGTH TO RESPECTIVE AIR DEVICE, SHALL BE INSTALLED PER MANUFACTURER'S LISTING STRETCHED AS TIGHT AS POSSIBLE, AND SHALL MEET THE REQUIREMENTS OF NFPA 90A IN CONSTRUCTION AND INSTALLATION.
25. MANUAL VOLUME DAMPERS SHALL BE PROVIDED IN ALL DUCT BRANCHES TO INDIVIDUAL DIFFUSERS, GRILLES, AND REGISTERS.
26. AIR DISTRIBUTION SYSTEMS SHALL NOT BE OPERATED WITHOUT A FILTER IN PLACE. CONTRACTOR SHALL REPLACE ALL FILTERS WITH A COMPLETE AND NEW SET PRIOR TO BUILDING OCCUPANCY.
27. COVER ALL OPENINGS IN EQUIPMENT, PIPING, DUCTS, AND OTHER SYSTEMS TO EXCLUDE ENTRANCE OF DIRT OR OTHER FOREIGN MATERIAL DURING CONSTRUCTION.
28. REFER TO THE SPECIFICATIONS BOOK FOR ADDITIONAL REQUIREMENTS.

GREEN BUILDING CODE NOTES

1. AT THE TIME OF ROUGH INSTALLATION AND DURING STORAGE ON CONSTRUCTION SITE UNTIL FINAL STARTUP OF THE HEATING, COOLING AND VENTILATING EQUIPMENT, ALL DUCT AND OTHER RELATED AIR DISTRIBUTION COMPONENT OPENINGS SHALL BE COVERED WITH TAPE, PLASTIC SHEETMETAL OR OTHER METHODS ACCEPTABLE TO THE ENFORCING AGENCY TO REDUCE THE AMOUNT OF DUST, WATER DEBRIS WHICH MAY ENTER THE SYSTEM. (CAL. GREEN SECTION 5304.3).
2. FOR BUILDINGS OR ADDITIONS EQUIPPED WITH DEMAND CONTROL VENTILATION, CO2 SENSORS AND VENTILATION CONTROLS SHALL BE SPECIFIED AND INSTALLED IN ACCORDANCE WITH THE REQUIREMENTS OF 2013 CALIFORNIA ENERGY CODE, SECTION (120(C)4). (CAL. GREEN SECTION 5506.2).
3. IN ADDITION TO TESTING AND ADJUSTING, BEFORE A NEW SPACE-AIR CONDITIONING SYSTEM SERVING A BUILDING OR SPACE IS OPERATED FOR NORMAL USE, BALANCE THE SYSTEM IN ACCORDANCE WITH THE PROCEDURES DEFINED BY THE TESTING ADJUSTING AND BALANCING BUREAU NATIONAL STANDARDS, THE NATIONAL ENVIRONMENTAL BALANCING BUREAU PROCEDURAL STANDARDS, OR ASSOCIATED AIR BALANCE COUNCIL NATIONAL STANDARDS.
4. PROVIDE THE BUILDING OWNER OR REPRESENTATIVE WITH DETAILED OPERATING AND MAINTENANCE INSTRUCTIONS AND COPIES OF GUARANTEES/WARRANTIES FOR EACH SYSTEM. O&M INSTRUCTIONS SHALL BE CONSISTENT WITH OSHA REQUIREMENTS IN CCR, TITLE 8, SECTION 5142 AND OTHER RELATED REGULATIONS.

TURPIN & RATTAN ENGINEERING, INC.
CONSULTING ENGINEERS
4719 PALM AVENUE
LA MESA, CA 91941-5221
619 / 466 / 6224 FAX 466 / 6233
E-MAIL: ENGINEER@TREIEC.COM

TREI PROJECT # 16432.S01

PREPARED FOR THE
GROSSMONT UNION HIGH SCHOOL DISTRICT
P.O.BOX 1043
LA MESA, CALIFORNIA

PREPARED BY
PLATT/WHITELAW ARCHITECTS, INC.
4094 30TH STREET
SAN DIEGO, CA (619)546-4360 FAX (619)546-4360

CERTIFICATION STAMP
DIV OF THE STATE ARCHITECT
OFFICE OF REGULATORY FOCUS
04-115930
FILE 37-H1
AC
DATE 04.17.17

REGISTERED PROFESSIONAL ENGINEER
NO. M33447
Exp. 06/30/18
MECHANICAL
STATE OF CALIFORNIA
4/18/17

REGISTERED ARCHITECT
C-10531
STATE OF CALIFORNIA
4/18/17

MECHANICAL LEGEND AND GENERAL NOTES

CENTRAL PLANT EQUIPMENT UPGRADE

VALHALLA HIGH SCHOOL
1725 HILLSDALE ROAD
EL CAJON, CA 92019

REVISION	DATE

PROJECT NO. FINA #C861.10

FILE NAME:

DATE: 4/14/2017 DRAWN: EL/PS CHECKED: CR/MR

M-001

SHEET NO. OF SHEETS

C:\Users\c.bennett\appdata\local\temp\AcPublish_7780\16432.10_M-001_MECHANICAL LEGEND AND GENERAL NOTES.dwg 04/18/2017 18:11

WATER-COOLED CHILLER SCHEDULE

TAG	MANUFACTURER	MODEL NO.	LOCATION	CAPACITY (TONS)	kW/TON	NPLV (kW/TON)	EVAPORATOR DATA: DESIGN GPM	EVAP. PD (FT. HD.)	MIN. GPM	ENT (°F)	LVT (°F)	FOULING FACTOR	EVAPORATOR CONFIGURATION	CONDENSER DATA: DESIGN GPM	COND. PD (FT. HD.)	ENT (°F)	LVT (°F)	FOULING FACTOR	CONDENSER CONFIGURATION	COMPRESSOR: TYPE	QUANTITY	REFRIGERANT: TYPE	CHARGE	ELECTRICAL DATA: V/PH/Hz	LRA	MCA	MOCP	REMARKS	ANCHORAGE DETAIL REFERENCE	OPERATING WEIGHT (LBS)
CH 1	CARRIER	23KRV/A2A4HPR23-	CHILLER ROOM	200.0	0.562	0.564	500	6.4	284	56	42	0.00010	2 PASS	558	8.6	80	90	0.00025	2 PASS	SCREW	2	R-134a	840 LB	460/3/60	1125	28	350	1,2,3,4,5	4 / S2.1	15,271
CH 2	CARRIER	23KRV/A2A4HPR23-	CHILLER ROOM	200.0	0.562	0.564	500	6.4	284	56	42	0.00010	2 PASS	558	8.6	80	90	0.00025	2 PASS	SCREW	2	R-134a	840 LB	460/3/60	1125	28	350	1,2,3,4,5	4 / S2.1	15,271

REMARKS: 1) VARIABLE SPEED SCREW COMPRESSOR, 2) FACTORY VFD W/ LINE REACTOR AND HARMONIC FILTER, 3) REFRIGERANT ISOLATION VALVES, 4) HOT GAS BYPASS, 5) SINGLE POINT POWER CONNECTION.

COOLING TOWER SCHEDULE

TAG	MFG.	MODEL NO.	SYSTEM SERVED	LOCATION	DESIGN WET BULB (°F)	WATER TEMP. (°F): ENT.	LVG.	WATER FLOW: GPM	PD (FT. HEAD)	FAN DATA: QTY.	MOTOR HP	ESP	ELECTRICAL DATA: V/PH/HZ	AMPS	REMARKS	ANCHORAGE DETAIL REFERENCE	OPERATING WEIGHT (LBS)
CT 1	BALTIMORE AIRCOIL COMPANY	PT2-08124-2X2/12X	CONDENSER WATER	COOLING TOWER YARD	76	90	80	558	115	1	25.0	0	460/3/60	-	1) PROVIDE WITH LOW SOUND POWER FANS, 2) EXTERNAL PLATFORM AND LADDER, 3) EZ FLOAT WATER LEVEL CONTROL, 4) ALL STAINLESS STEEL CONSTRUCTION, 5) WATER BASIN FLOAT SWITCH WITH HIGH AND LOW LEVEL ALARMS, 6) VIBRATION CUTOUT SWITCH.	7 / S2.0	4,555
CT 2	BALTIMORE AIRCOIL COMPANY	PT2-08124-2X2/12X	CONDENSER WATER	COOLING TOWER YARD	76	90	80	558	115	1	25.0	0	460/3/60	-	1) PROVIDE WITH LOW SOUND POWER FANS, 2) EXTERNAL PLATFORM AND LADDER, 3) EZ FLOAT WATER LEVEL CONTROL, 4) ALL STAINLESS STEEL CONSTRUCTION, 5) WATER BASIN FLOAT SWITCH WITH HIGH AND LOW LEVEL ALARMS, 6) VIBRATION CUTOUT SWITCH.	7 / S2.0	4,555

CONDENSER WATER FILTER SCHEDULE

TAG	MFR.	MODEL	LOCATION	SYSTEM SERVED	TYPE	DESIGN: GPM	VOLUME (GAL.)	ELECTRICAL DATA: PUMP MOTOR HP	V/PH/Hz	REMARKS	ANCHORAGE DETAIL REFERENCE	OPERATING WEIGHT (LBS)
CWF 1	FUROFLUX	FF-64-025-AP	COOLING TOWER YARD	CONDENSER WATER	SOLID SEPARATOR	160	8	5	460/60/3	1) AUTOMATIC PURGE CONTROL, 2) NEMA 4X CONTROL PANEL, 3) MANUAL PURGE OPTION, 4) ISOLATION VALVE KIT, 5) TEFC PUMP MOTOR.	8 / S2.0	561

GAS-FIRED HOT WATER BOILER SCHEDULE

TAG	MANUFACTURER	MODEL NO.	LOCATION	CAPACITY: INPUT (MBH)	OUTPUT (MBH)	MIN. EFF. (%)	TURNDOWN RATIO	HEATING HOT WATER DATA: FLOW RATE (GPM)	ENT (°F)	LVT (°F)	FD (FT)	ELECTRICAL DATA: V/PH/Hz	MCA	REMARKS	ANCHORAGE DETAIL REFERENCE	OPERATING WEIGHT (LBS)
B 1	RAYPAK	XTHERM H1-2005A	BOILER ROOM	1,999	1,694	95.4	7:1	96	140	180	-	120/1/60	50	1,2,3,4,5,6	3 / W-501	1,461
B 2	RAYPAK	XTHERM H1-2005A	BOILER ROOM	1,999	1,694	95.4	7:1	96	140	180	-	120/1/60	50	1,2,3,4,5,6	3 / W-501	1,461
B 3	RAYPAK	XTHERM H1-2005A	BOILER ROOM	1,999	1,694	95.4	7:1	96	140	180	-	120/1/60	50	1,2,3,4,5,6	3 / W-501	1,461

REMARKS: 1) INTEGRAL BOILER PRIMARY PUMP, 2) INTEGRAL 24V CONTROLS TRANSFORMER, 3) FACTORY CATEGORY IV VENT TERMINATION, 4) LOW WATER CUT-OFF CONTROL, 5) HIGH LIMIT, AUTO-RESET CONTROL, 6) CONDENSATE NEUTRALIZER KIT.

PUMP SCHEDULE

TAG	MANUFACTURER	MODEL NO.	SYSTEM SERVED	LOCATION	PUMP TYPE	MIN. EFF. (%)	FLOW RATE (GPM)	PRESS. DROP (FT.)	NPSH	BHP	IMPELLER DIAMETER (IN)	SUCTION DIFFUSER SIZE	ELECTRICAL DATA: MOTOR HP	MOTOR RPM	MOTOR: TYPE	EFF. (%)	V/PH/Hz	REMARKS	ANCHORAGE DETAIL REFERENCE	OPERATING WEIGHT (LBS)
P 1	BELL AND GOSSETT	E-1532 SEB	CHILLED WATER	CHILLER ROOM	CLOSE-COUPLED END SUCTION	73.3	500	100	5.1	10.4	10.25	4"x3"	15	1,800	TEFC	91.0	460/3/60	1,2	3 / S2.0	452
P 2	BELL AND GOSSETT	E-1532 SEB	CHILLED WATER	CHILLER ROOM	CLOSE-COUPLED END SUCTION	73.3	500	100	5.1	10.4	10.25	4"x3"	15	1,800	TEFC	91.0	460/3/60	1,2	3 / S2.0	452
P 3	BELL AND GOSSETT	E-1532 SEB	CONDENSER WATER	COOLING TOWER YARD	CLOSE-COUPLED END SUCTION	83.6	558	40	5.0	6.8	10.25	6"x5"	10	1,200	TEFC	84.5	460/3/60	1,2	3 / S2.0	551
P 4	BELL AND GOSSETT	E-1532 SEB	CONDENSER WATER	COOLING TOWER YARD	CLOSE-COUPLED END SUCTION	83.6	558	40	5.0	6.8	10.25	6"x5"	10	1,200	TEFC	84.5	460/3/60	1,2	3 / S2.0	551
P 5	BELL AND GOSSETT	E-1532 1.5AD	HEATING HOT WATER	BOILER ROOM	CLOSE-COUPLED END SUCTION	68.6	144	100	4.5	5.4	5.25	5"x4.5"	7.5	3,600	TEFC	84.5	460/3/60	1,2	3 / S2.0	165
P 6	BELL AND GOSSETT	E-1532 1.5AD	HEATING HOT WATER	BOILER ROOM	CLOSE-COUPLED END SUCTION	68.6	144	100	4.5	5.4	5.25	5"x4.5"	7.5	3,600	TEFC	84.5	460/3/60	1,2	3 / S2.0	165

REMARKS: 1) FIELD SUPPLIED VFD, 2) B46 (OR EQUAL) FLANGED SUCTION DIFFUSER.

EXHAUST FAN SCHEDULE

TAG	MFR.	MODEL	LOCATION	AREA SERVED	TYPE	DESIGN: CFM	ESP (IN WG)	FAN RPM	ELECTRICAL DATA: BHP	MOTOR HP/(WATTS)	V/PH/Hz	FLA	CONTROL	REMARKS	ANCHORAGE DETAIL REFERENCE	OPERATING WEIGHT (LBS)
EF 1	GREENHECK	GBE-200-30	ROOF	GRILLER ROOM	CENTRIFUGAL UBELAST	4,100	1.0	1,103	1.62	2	460/60/3	3.4	THERMOSTAT/ EMERGENCY INPUT	1) PREMIUM EFFICIENCY, VFD RATED MOTOR, 2) FACTORY BACKDRAFT DAMPER, 3) FACTORY 14" TALL ROOF CURB, 4) AUTO BELT TENSIONER.	3 / W-501	115
EF 2	GREENHECK	G-095-VG	ROOF	BOILER ROOM	CENTRIFUGAL	500	0.5	1,575	0.071	1/6	115/60/1	3.4	THERMOSTAT	1) EC MOTOR W/ FAN SPEED CONTROLLER ON MOTOR, 2) FACTORY BACKDRAFT DAMPER, 3) FACTORY 14" TALL ROOF CURB.	3 / W-501	52
EF 3	GREENHECK	G-125-VG	ROOF	ELECTRICAL ROOM	CENTRIFUGAL	1,050	0.5	1,275	0.2	1/2	115/60/1	6.2	THERMOSTAT	1) EC MOTOR W/ FAN SPEED CONTROLLER ON MOTOR, 2) FACTORY BACKDRAFT DAMPER, 3) FACTORY 14" TALL ROOF CURB.	3 / W-501	74

GRAVITY VENTILATOR SCHEDULE

TAG	MANUFACTURER	MODEL NO.	TYPE	AREA SERVED	CFM	TSP (IN. WG)	THROAT WIDTH (IN)	THROAT LENGTH (IN)	THROAT AREA (SQ. FT.)	THROAT VELOCITY (FPM)	REMARKS	ANCHORAGE DETAIL REFERENCE	OPERATING WEIGHT (LBS)
GV 1	GREENHECK	FSI	INTAKE	BOILER ROOM	300	0.036	12	12	1.0	300	1) GALVANIZED STEEL HOUSING, 2) FACTORY BACKDRAFT DAMPER, 3) 2" THICK WASHABLE ALUMINUM FILTERS, 4) FACTORY 14" TALL ROOF CURB.	4 / W-501	91

EQUIPMENT SCHEDULE

TAG	DESCRIPTION	ANCHORAGE DETAIL REFERENCE
AS 1	AIR SEPARATOR. TACO MODEL 4908AR-150 OR EQUAL WITH 8" FLANGED INLET AND OUTLET CONNECTIONS, REMOVABLE COVER, BASE RING WITH ANCHOR CLIPS, CARBON STEEL BODY WITH RED OXIDE PRIMER FINISH, ASME STAMP WITH 150 PSIG AT 240°F RATING. PROVIDE WITH FACTORY AIR VENT, BLOWDOWN VALVE, AND FLUSH VALVE. WEIGHT: 550 LB	4 / W-501
ET 1	BUFFER TANK. TACO MODEL MP1025OFO4-12SWEN OR EQUAL WITH MINIMUM ACCEPTANCE VOLUME OF 250 GALLONS, 8" OPTION 'E' FLANGED INLET AND OUTLET CONNECTIONS, BASE RING WITH ANCHOR CLIPS, CARBON STEEL BODY WITH RED OXIDE PRIMER FINISH, ASME STAMP WITH 150 PSIG AT 240°F RATING. PROVIDE WITH FACTORY AIR VENT AND (5) TEMPERATURE/PRESSURE PORTS. WEIGHT: 2,718 LB	6 / S2.0
ET 1	EXPANSION TANK. AMTROL MODEL WS-15SC OR EQUAL WITH MINIMUM TANK VOLUME OF 44 GALLONS, PRE-CHARGED BLADDER TYPE, BASE RING WITH ANCHOR CLIPS, CARBON STEEL BODY WITH RED OXIDE PRIMER FINISH, ASME STAMP WITH 150 PSIG AT 240°F RATING. PROVIDE WITH FACTORY SIGHT GLASS AND DRAIN VALVE. WEIGHT: 317 LB	2 / W-501
ET 2	EXPANSION TANK. BELL & GOSSETT MODEL B-500 OR EQUAL WITH MINIMUM ACCEPTANCE VOLUME OF 152 GALLONS, PRE-CHARGED BLADDER TYPE, BASE RING WITH ANCHOR CLIPS, CARBON STEEL BODY WITH RED OXIDE PRIMER FINISH, ASME STAMP WITH 150 PSIG AT 240°F RATING. PROVIDE WITH FACTORY SIGHT GLASS AND DRAIN VALVE. EXISTING TANK SHALL BE SALVAGED AND RE-INSTALLED PER PLAN. WEIGHT: 1,520 LB	2 / W-501
BF 1, BF 2	BYPASS CHEMICAL FEEDER. NEPTUNE MODEL DBFC-5 OR EQUAL, 5 GALLON TANK, CARTRIDGE FILTER ASSEMBLY, FACTORY SUPPORT LEGS. WEIGHT: 55 LB	5 / S2.1
CWT 1	CONDENSER WATER TREATMENT SYSTEM. TRIDENT CHEMICAL FEED AND CONTROL SYSTEM. EXISTING SYSTEM SHALL BE SALVAGED AND RE-INSTALLED PER PLAN.	NA
FM 1	FLOW METER. ONICON MODEL F-5300 OR EQUAL, 4" INLINE FLANGED ELECTROMAGNETIC FLOW METER. FURNISHED BY CONTROLS CONTRACTOR, INSTALLED BY MECHANICAL CONTRACTOR. PROVIDE MINIMUM (5) PIPE DIAMETERS OF STRAIGHT PIPE UPSTREAM AND DOWNSTREAM OF FLOW METER AND INSTALL PER MANUFACTURER'S WRITTEN INSTRUCTIONS.	NA

VFD SCHEDULE

TAG	MANUFACTURER	MODEL NO.	EQUIPMENT SERVED	LOCATION	GENERAL DATA: HP	ELECTRICAL DATA: ENCLOSURE	V/PH/Hz	REMARKS	ANCHORAGE DETAIL REFERENCE	OPERATING WEIGHT (LBS)
VFD 1	ABB	ACH550-VOR	P 1	CHILLER ROOM	15	UL TYPE 1	460/3/60	1,2,3,4	7 / W-501	40
VFD 2	ABB	ACH550-VOR	P 2	CHILLER ROOM	15	UL TYPE 3R	460/3/60	1,2,3,4	7 / W-501	40
VFD 3	ABB	ACH550-BOR	P 3	COOLING TOWER YARD	10	UL TYPE 3R	460/3/60	1,2,3,4	6 / W-501	86
VFD 4	ABB	ACH550-BOR	P 4	COOLING TOWER YARD	10	UL TYPE 3R	460/3/60	1,2,3,4	6 / W-501	86
VFD 5	ABB	ACH550-VOR	P 5	BOILER ROOM	7.5	UL TYPE 1	460/3/60	1,2,3,4	7 / W-501	52
VFD 6	ABB	ACH550-VOR	P 6	BOILER ROOM	7.5	UL TYPE 1	460/3/60	1,2,3,4	7 / W-501	52
VFD 7	ABB	ACH550-BOR	CT 1	COOLING TOWER YARD	25	UL TYPE 3R	460/3/60	1,2,3,4	6 / W-501	176
VFD 8	ABB	ACH550-BOR	CT 2	COOLING TOWER YARD	25	UL TYPE 3R	460/3/60	1,2,3,4	6 / W-501	176
VFD 9	ABB	ACH550-VOR	EF 1	CHILLER ROOM	2	UL TYPE 1	460/3/60	1,2,3,4	7 / W-501	52

REMARKS: 1) 5% INTERNAL LINE REACTOR (VFD'S THAT USE OPTIONAL REACTORS ARE NOT ACCEPTED), 2) INTERNAL EMI/RFI FILTER, 3) THE VFD SHALL BE RATED FOR 100K AIC WITHOUT THE NEED FOR INPUT FUSING, 4) ALL ENCLOSURES SHALL BE UL TYPE APPROVED. (SELF CERTIFIED NEMA ENCLOSURES ARE NOT ACCEPTABLE)

TURPIN & RATTAN ENGINEERING, INC.
CONSULTING ENGINEERS
4719 PALM AVENUE
LA MESA, CA 91941-5221
619 / 465 / 5224 FAX 465 / 6233
E-MAIL: ENGINEER@TREIEO.COM

TREI PROJECT # 16432.S01

PREPARED FOR THE: GROSSMONT UNION HIGH SCHOOL DISTRICT
P.O.BOX 1043
LA MESA, CALIFORNIA

PREPARED BY: PLATT/WHITELAW ARCHITECTS, INC.
4094 30TH STREET
SAN DIEGO, CA (619)546-4326 FAX (619)546-4360

CERTIFICATION STAMP DIV. OF THE STATE ARCHITECT OFFICE OF REGULATION SERVICES
04-115930
FILE 10144
FLD
AC.
DATE

PROFESSIONAL ENGINEER REGISTRATION NO. M33447 Exp. 12/31/18 Date 4/18/17

PROFESSIONAL ARCHITECT REGISTRATION NO. C-17031 Exp. 12-31-17 Date 4-18-17 STATE OF CALIFORNIA

MECHANICAL SCHEDULES

CENTRAL PLANT EQUIPMENT UPGRADE

VALHALLA HIGH SCHOOL
1725 HILLSDALE ROAD
EL CAJON, CA 92019

REVISION	DATE

PROJECT NO. PWA #056110

FILE NAME:

DATE: 4/14/2017 DRAWN: EL/PS CHECKED: GR/MR

M-002

SHEET NO. 1 OF SHEETS

J:\16432.S01 - GUHSD Valhalla HS Central Plant Upgrade\16432.10\Analysis\16432.10_M-002_MECHANICAL SCHEDULES.dwg 04/26/2017 11:39

FILTER BANK SCHEDULE

TAG	GENERAL DATA: MANUFACTURER	MODEL	LOCATION	CFM	MAX. FACE VELOCITY (FPM)	PRESSURE DROP (IN. WG) INITIAL	PRESSURE DROP (IN. WG) FINAL	FILTERS: TYPE	QTY	SIZE (WxHxD) (IN)	OPENING SIZE (WxH) (IN)	REMARKS	OPERATING WEIGHT (LB)
FB 1	CAMFIL FARR	TYPE 8 BUILT-UP	CHILLER ROOM	4,100	550	0.08	0.25	MERV 5	3	24x24x2	24x72	CAMFIL FAR 30/30 2" THICK FILTERS	40
FB 2	CAMFIL FARR	TYPE 8 BUILT-UP	ELECTRICAL ROOM	1,050	270	0.08	0.25	MERV 5	1	24x24x2	24x24	CAMFIL FAR 30/30 2" THICK FILTERS	40

Per CW Driver RFI # 4 Iron butterflies can be used for PVC valves.

MEP COMPONENT ANCHORAGE NOTE

ALL MECHANICAL, PLUMBING, AND ELECTRICAL COMPONENTS SHALL BE ANCHORED AND INSTALLED PER THE DETAILS ON THE DSA APPROVED CONSTRUCTION DOCUMENTS. WHERE NO DETAIL IS INDICATED, THE FOLLOWING COMPONENTS SHALL BE ANCHORED OR BRACED TO MEET THE FORCE AND DISPLACEMENT REQUIREMENTS PRESCRIBED IN THE 2016 CBC, SECTIONS 1616A.1.18 THROUGH 1616A.1.26 AND ASCE 7-10 CHAPTER 13, 26 AND 30.

1. ALL PERMANENT EQUIPMENT AND COMPONENTS.
2. TEMPORARY OR MOVABLE EQUIPMENT THAT IS PERMANENTLY ATTACHED (E.G. HARD WIRED) TO THE BUILDING UTILITY SERVICES SUCH AS ELECTRICITY, GAS OR WATER.
3. MOVABLE EQUIPMENT WHICH IS STATIONED IN ONE PLACE FOR MORE THAN 8 HOURS AND HEAVIER THAN 400 POUNDS ARE REQUIRED TO BE ANCHORED WITH TEMPORARY ATTACHMENTS.

THE FOLLOWING MECHANICAL AND ELECTRICAL COMPONENTS SHALL BE POSITIVELY ATTACHED TO THE STRUCTURE, BUT THE ATTACHMENT NEED NOT BE DETAILED ON THE PLANS. THESE COMPONENTS SHALL HAVE FLEXIBLE CONNECTIONS PROVIDED BETWEEN THE COMPONENT AND ASSOCIATED DUCTWORK, PIPING AND CONDUIT.

A. COMPONENTS WEIGHING LESS THAN 400 POUNDS AND HAVE A CENTER OF MASS LOCATED 4 FEET OR LESS ABOVE THE ADJACENT FLOOR OR ROOF LEVEL THAT DIRECTLY SUPPORT THE COMPONENT.

B. COMPONENTS WEIGHING LESS THAN 20 POUNDS, OR IN THE CASE OF DISTRIBUTED SYSTEMS, LESS THAN 5 POUNDS PER FOOT, WHICH ARE SUSPENDED FROM A ROOF OR FLOOR OR HUNG FROM A WALL.

FOR THOSE ELEMENTS THAT DO NOT REQUIRE DETAILS ON THE APPROVED DRAWINGS, THE INSTALLATION SHALL BE SUBJECT TO THE APPROVAL OF THE DESIGN PROFESSIONAL IN GENERAL RESPONSIBLE CHARGE OR STRUCTURAL ENGINEER DELEGATED RESPONSIBILITY AND THE DSA DISTRICT STRUCTURAL ENGINEER. THE PROJECT INSPECTOR WILL VERIFY THAT ALL COMPONENTS AND EQUIPMENT HAVE BEEN ANCHORED IN ACCORDANCE WITH ABOVE REQUIREMENTS.

PIPING, DUCTWORK, AND ELECTRICAL DISTRIBUTION SYSTEM BRACING NOTE

PIPING, DUCTWORK, AND ELECTRICAL DISTRIBUTION SYSTEMS SHALL BE BRACED TO COMPLY WITH THE FORCES AND DISPLACEMENTS PRESCRIBED IN ASCE 7-10 SECTION 13.5 AS DEFINED IN ASCE 7-10 SECTION 13.4.5.6, 13.4.7, 13.4.8, AND 2016 CBC, SECTIONS 1616A.1.20, 1616A.1.24, 1616A.1.25 AND 1616A.1.26.

THE METHOD OF SHOWING BRACING AND ATTACHMENTS TO THE STRUCTURE FOR IDENTIFIED DISTRIBUTION SYSTEM ARE AS NOTED BELOW, WHEN BRACING AND ATTACHMENTS ARE BASED ON A PRE-APPROVED INSTALLATION GUIDE (E.G., SHAKGRA OR OSHPOD OPM), COPIES OF THE BRACING SYSTEM INSTALLATION GUIDE OR MANUAL SHALL BE AVAILABLE ON THE JOBSITE PRIOR TO THE START OF AND DURING THE HANGING AND BRACING OF THE DISTRIBUTION SYSTEMS. THE STRUCTURAL ENGINEER OF RECORD SHALL VERIFY THE ADEQUACY OF THE STRUCTURE TO SUPPORT THE HANGER AND BRACE LOADS.

MECHANICAL PIPING (MP), MECHANICAL DUCTS (MD), PLUMBING PIPING (PP), ELECTRICAL DISTRIBUTION SYSTEMS (E).

MP ☒ MD ☒ PP ☐ E ☐ - OPTION 1: DETAILED ON THE APPROVED DRAWINGS WITH PROJECT SPECIFIC NOTES AND DETAILS.

MP ☐ MD ☐ PP ☐ E ☐ - OPTION 2: SHALL COMPLY WITH THE APPLICABLE OSHPD PRE-APPROVAL (OPM) # _____.

MP ☐ MD ☐ PP ☐ - OPTION 3: SHALL COMPLY WITH SHAKGRA SEISMIC RESTRAINT MANUAL, OSHPD EDITION (2006), INCLUDING ANY ADDENDA. FASTENERS AND OTHER ATTACHMENTS NOT SPECIFICALLY IDENTIFIED IN THE SHAKGRA SEISMIC RESTRAINT MANUAL, OSHPD EDITION, ARE DETAILED ON THE APPROVED DRAWINGS WITH PROJECT SPECIFIC NOTES AND DETAILS. THE DETAILS SHALL ACCOUNT FOR THE APPLICABLE SEISMIC HAZARD LEVEL ____ AND CONNECTION LEVEL ____ FOR THE PROJECT AND CONDITIONS.

TURPIN & RATTAN ENGINEERING, INC.
CONSULTING ENGINEERS
4719 PALM AVENUE
LA MESA, CA 91941-5221
619 / 466 / 6224 FAX 466 / 6233
E-MAIL: ENGINEER@TREIMEP.COM

TREI PROJECT # 16432.501

PREPARED FOR THE GROSSMONT UNION HIGH SCHOOL DISTRICT
P.O.BOX 1043
LA MESA, CALIFORNIA

PREPARED BY PLATT/WHITELAW ARCHITECTS, INC.
4084 30TH STREET
SAN DIEGO, CA (619)546-4920 FAX (619)546-4950

CERTIFICATION STAMP
DSA-SS/CC (NON-STRUCT)
OFFICE OF REGULATION SERVICES
04-115030
FILE #37114
AC. ____ PLS 89
DATE 042717

REGISTERED PROFESSIONAL ENGINEER
NO. M33843
EXP. 06/30/18
STATE OF CALIFORNIA
4/18/17

REGISTERED ARCHITECT
STATE OF CALIFORNIA
4/18/17

MECHANICAL SCHEDULES

CENTRAL PLANT EQUIPMENT UPGRADE

VALHALLA HIGH SCHOOL
1726 HILLSDALE ROAD
EL CAJON, CA 92019

REVISION	DATE

PROJECT NO. PWA #056110

FILE NAME:

DATE: 4/14/2017 DRAWN: EL/PS CHECKED: CR/MR

M-003

SHEET NO. 1 OF SHEETS

J:\16\16432.001 - GUHSD Valhalla HS Central Plant Upgrade\16432.10\Arch\16432.10_M-003_MECHANICAL SCHEDULES.dwg 04/18/2017 19:11

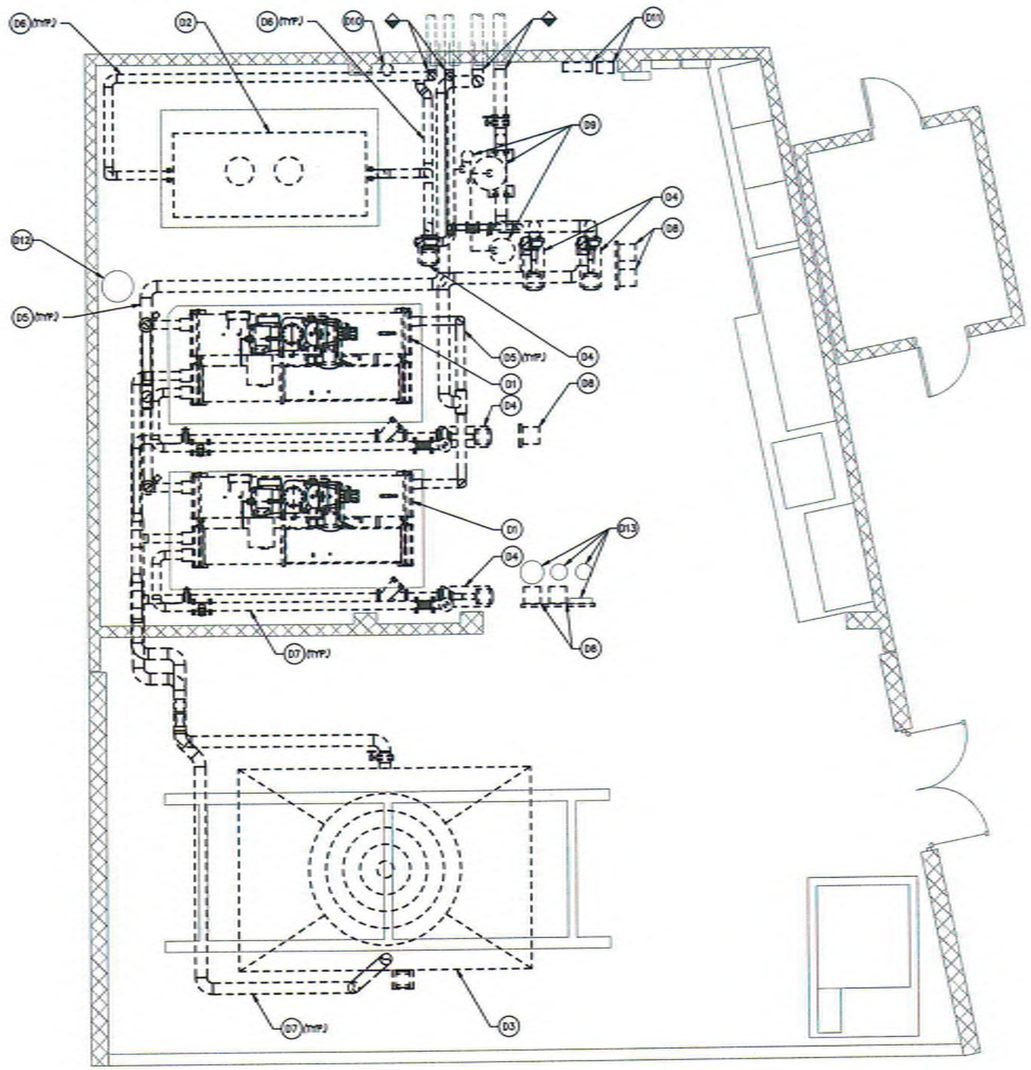

MECHANICAL - DEMOLITION FLOOR PLAN

SCALE: 1/4" = 1'-0"

KEYNOTES

1. D1 DEMO EXISTING CHILLER AND ASSOCIATED APPURTENANCES.
2. D2 DEMO EXISTING BOILER AND ASSOCIATED APPURTENANCES.
3. D3 DEMO EXISTING COOLING TOWER AND ASSOCIATED APPURTENANCES.
4. D4 DEMO EXISTING HYDRONIC PUMP, VALVES, AND ASSOCIATED APPURTENANCES. REMOVE AND SALVAGE EXISTING PUMP MOTOR AND TURN OVER TO OWNER.
5. D5 DEMO EXISTING CHILLED WATER PIPING, SUPPORTS, VALVES, AND ASSOCIATED APPURTENANCES.
6. D6 DEMO EXISTING HEATING HOT WATER PIPING, SUPPORTS, VALVES, AND ASSOCIATED APPURTENANCES.
7. D7 DEMO EXISTING CONDENSER WATER PIPING, SUPPORTS, VALVES, AND ASSOCIATED APPURTENANCES.
8. D8 REMOVE AND SALVAGE EXISTING FRAME MOUNTED VARIABLE FREQUENCY DRIVE AND TURN OVER EXISTING DRIVE TO OWNER. DEMO EXISTING INSITUT FRAME.
9. D9 DEMO EXISTING CHILLED WATER AIR SEPARATOR, EXPANSION TANK, CHEMICAL BYPASS FEEDER, AND ASSOCIATED PIPING AND APPURTENANCES.
10. D10 DEMO EXISTING HEATING HOT WATER CHEMICAL BYPASS FEEDER AND ASSOCIATED PIPING AND APPURTENANCES.
11. D11 DEMO EXISTING HVAC CONTROL PANEL AND UPS ENCLOSURES.
12. D12 REMOVE AND SALVAGE EXISTING HEATING HOT WATER EXPANSION TANK AND RETAIN FOR RE-INSTALLATION.
13. D13 REMOVE AND SALVAGE EXISTING CONDENSER WATER CHEMICAL WATER TREATMENT CONTROLLER, TANKS, AND PUMPS AND RETAIN FOR RE-INSTALLATION.

TURPIN & RATTAN ENGINEERING, INC.
CONSULTING ENGINEERS
4719 PALM AVENUE
LA MESA, CA 91941-5221
619 / 466 / 6224 FAX 466 / 6233
E-MAIL: ENGINEER@TREIEO.COM

TREI PROJECT # 16432.501

PREPARED FOR THE
GROSSMONT UNION HIGH SCHOOL DISTRICT
P.O.BOX 1043
LA MESA, CALIFORNIA

PREPARED BY
PLATT/WHITELAW ARCHITECTS, INC.
4094 30TH STREET
SAN DIEGO, CA (619)640-4320 FAX (619)640-4360

DIVISION OF THE STATE ARCHITECT
DIV. OF ENGINEERING
OFFICE OF REGULATION SERVICES
04-115000
FILE #3714
AC
FILE
DATE 04/27/17

4/18/17

MECHANICAL - DEMOLITION FLOOR PLAN

CENTRAL PLANT EQUIPMENT UPGRADE

VALHALLA HIGH SCHOOL
1725 HILLSDALE ROAD
EL CAJON, CA 92019

REVISION	DATE

PROJECT NO. PWA #056130

FILE NAME:

DATE: 4/14/2017 DRAWN: EL/PS CHECKED: CR/MR

M-101

SHEET NO. : OF SHEETS

J:\16\16432.501 - GUHSD Valhalla HS Central Plant Upgrade\16432.10\Amdmnts\16432.10_M-101_MECHANICAL - DEMOLITION FLOOR PLAN.dwg 04/18/2017 10:11

KEYNOTES

(D14) DEMO EXISTING GAS FLUE VENT THRU ROOF AND TERMINATION. PATCH AND REPAIR ROOF PER A-101 AND A-104.

(D15) DEMO EXISTING ROOF CAP. PATCH AND REPAIR ROOF PER A-101 AND A-104.

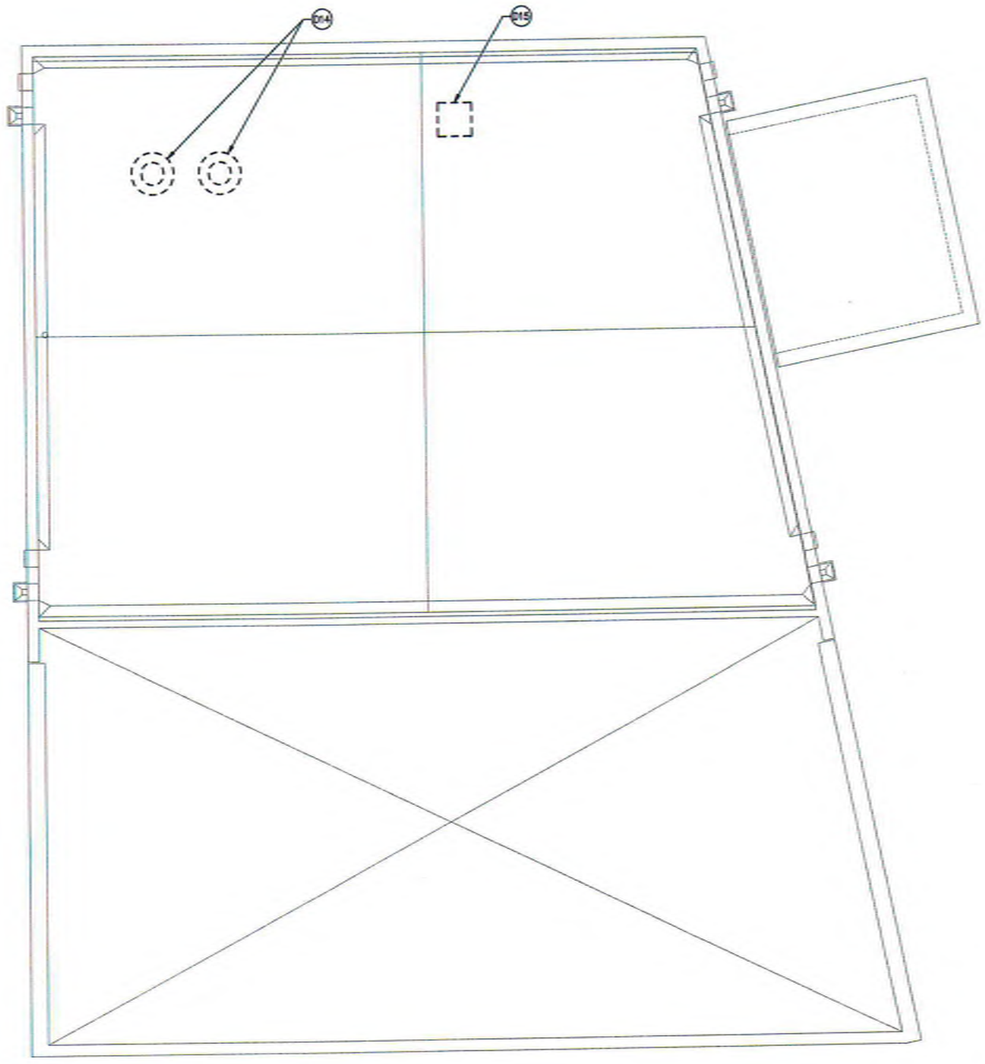

MECHANICAL - DEMOLITION ROOF PLAN

SCALE: 1/4" = 1'-0"

0 2' 4' 8' 12'

1/4" = 1'-0"

NORTH

TURPIN & RATTAN ENGINEERING, INC.
CONSULTING ENGINEERS
4715 PALM AVENUE
LA MESA, CA 91941-5221
619 / 466 / 6224 FAX 466 / 6233
E-MAIL: ENGINEER@TREISD.COM

TREI PROJECT # 16432.S01

PREPARED FOR THE
GROSSMONT UNION HIGH SCHOOL DISTRICT
P.O.BOX 1043
LA MESA, CALIFORNIA

PREPARED BY
PLATT/WHITELAW ARCHITECTS, INC.
4094 30TH STREET
SAN DIEGO, CA (619)546-4350 FAX (619)546-4350

DIVISION OF THE STATE ARCHITECT
OFFICE OF REGULATION SERVICES
04115030
FILE 42-44
AC. PA-56 SC.
DATE 4/27/17

REGISTERED PROFESSIONAL ENGINEER
MICHAEL J. RATTAN
NO. M33467
EXP. 06/30/18
STATE OF CALIFORNIA
4/18/17

REGISTERED ARCHITECT
STATE OF CALIFORNIA
EXP. 12/31/17

MECHANICAL - DEMOLITION ROOF PLAN

CENTRAL PLANT EQUIPMENT UPGRADE

VALHALLA HIGH SCHOOL
1725 HILLSDALE ROAD
EL CAJON, CA 92019

REVISION	DATE

PROJECT NO. FMA #056130

FILE NAME:

DATE: 4/14/2017 DRAWN: EL/PS CHECKED: CR/MR

M-102

SHEET NO. 1 OF SHEETS

J:\16\16432.S01 - GUHSD Valhalla HS Central Plant Upgrade\16432.10_M-102_MECHANICAL - DEMOLITION ROOF PLAN.dwg 04/18/2017 15:11

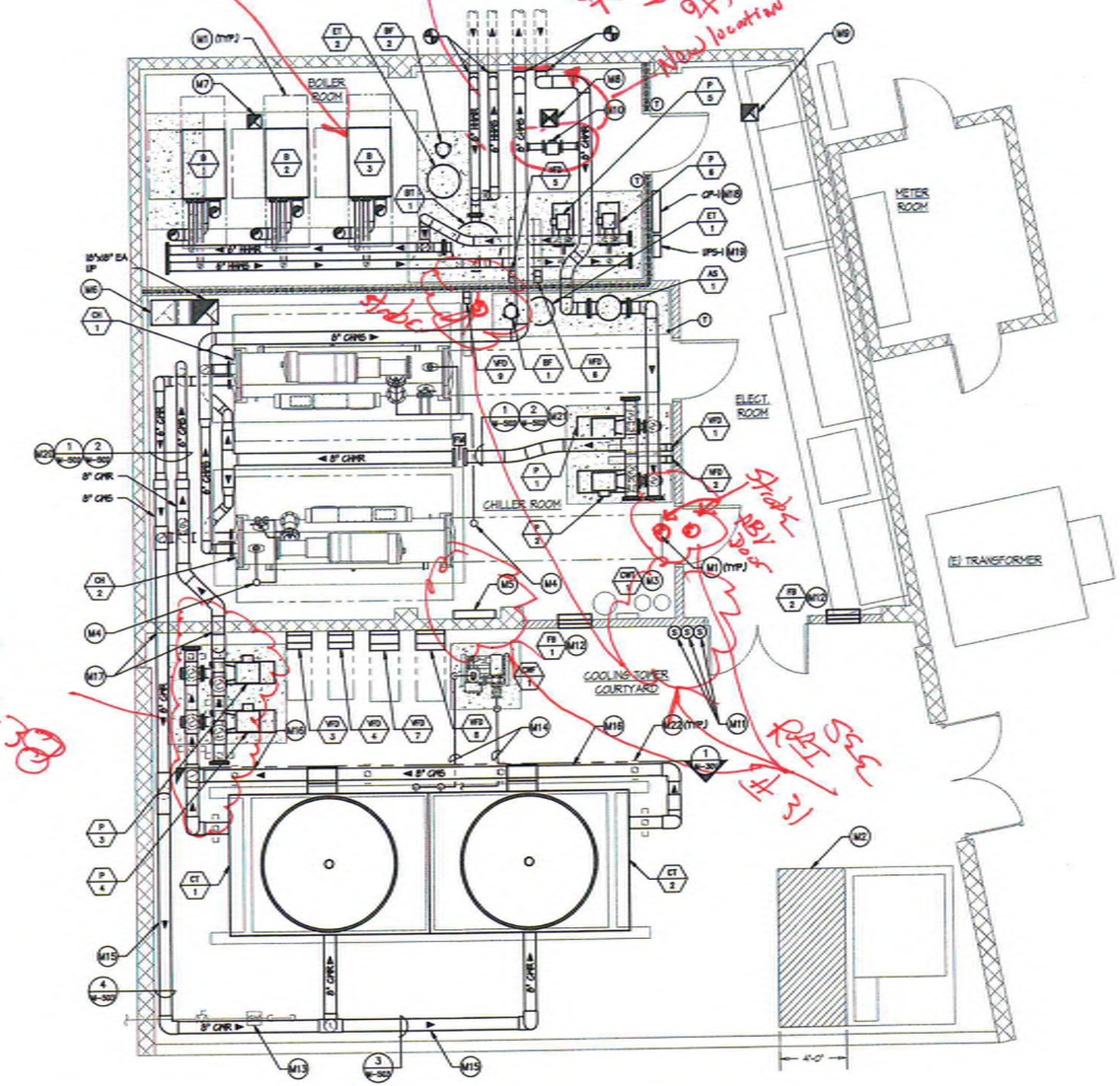

KEYNOTES

M1 PROVIDE MECHANICAL EQUIPMENT CLEARANCE AND ACCESS PER MANUFACTURER'S REQUIREMENTS.

M2 PROVIDE CLEARANCE ADJACENT TO ELECTRICAL TRANSFORMER PER ELECTRICAL CODE REQUIREMENTS.

M3 EXISTING RELOCATED CONDENSER WATER TREATMENT SYSTEM CONSISTING OF CHEMICAL BARRELS AND CHEMICAL TREATMENT CONTROLLER. MANUFACTURER'S SERVICE REPRESENTATIVE SHALL INSPECT AND RE-COMMISSIONING EXISTING SYSTEM.

M4 8" REFRIGERANT PRESSURE RELIEF PIPE UP THRU ROOF. CONNECT TO INDIVIDUAL CHILLER REFRIGERANT PRESSURE RELIEF VALVES. COMBINED PIPING SIZE SHALL BE SUCH THAT THE INTERNAL FREE AREA IS EQUAL OR GREATER THAN THE SUM OF THE FREE AREAS OF EACH INDIVIDUAL CONNECTED PIPE AND PER 2016 CMC SECTION 922.3 - DISCHARGE PIPING.

M5 REFRIGERANT MONITORING PANEL MOUNTED TO CONCRETE BLOCK WALL PER DETAIL 6/M-501. FIELD ROUTE PIPING TO REMOTE SENSORS. FIELD LOCATE REMOTE SENSORS FOR OPTIMAL COVERAGE OF CHILLER ROOM.

M6 18"x18" EA DUCT. OFFSET 45° AND ROUTE DOWN TO WITHIN 12" OF FINISHED FLOOR. PROVIDE 18"x18" OPENING IN DUCT NEAR FLOOR LEVEL AND NEAR CEILING LEVEL. COVER OPENINGS WITH 1/2" GALVANIZED WIRE SCREEN. SUPPORT PER DETAIL 8/M-501.

M7 10"x10" EA UP THRU ROOF. COVER OPENING WITH 1/2" GALVANIZED WIRE SCREEN.

M8 12"x12" OA UP THRU ROOF. COVER OPENING WITH 1/2" GALVANIZED WIRE SCREEN.

M9 12"x12" EA UP THRU ROOF. COVER OPENING WITH 1/2" GALVANIZED WIRE SCREEN.

M10 4" CHW BYPASS AND AUTOMATIC MOTORIZED CONTROL VALVE.

M11 PROVIDE (3) BREAK GLASS TYPE OVERRIDE SWITCHES AND (1) AMBER AND (1) GREEN PILOT LIGHT ON WALL ADJACENT TO DOOR. EACH SWITCH SHALL HAVE A SINGLE FUNCTION FOR THE FOLLOWING ACTIONS:

SWITCH 1: CH1 SHUTDOWN (OFF ONLY)
SWITCH 2: CH-2 SHUTDOWN (OFF ONLY)
SWITCH 3: EF-1 ENERGIZE (ON ONLY)

THE AMBER PILOT LIGHT SHALL INDICATE NO FLOW ACROSS EF-1 AND THE GREEN PILOT LIGHT SHALL INDICATE FLOW ACROSS EF-1.

REFER TO SEQUENCE OF OPERATIONS FOR MORE INFORMATION.

M12 OUTSIDE AIR LOUVER PER ARCHITECT.

M13 EXISTING NATURAL GAS METER AND PIPING ASSEMBLY. EQUIPMENT, PIPING, AND SUPPORTS SHALL BE LOCATED TO MAINTAIN ACCESS TO AND SERVICEABILITY OF THE NATURAL GAS PIPING.

M14 2-1/2" AND 5" CONDENSER WATER PIPING TO AND FROM COOLING TOWER SWEEPER CONNECTIONS.

M15 CONDENSER WATER PIPING ROUTED HIGH ON EXISTING WALL. REFER TO DETAIL 5/M-505 AT STUD WALL AND 4/M-505 AT CMU WALL.

M16 CONDENSER WATER PIPING ROUTED LOW ALONG EXISTING COOLING TOWER SUPPORT PIERS.

M17 CONDENSER WATER PIPING THRU EXISTING CMU WALL. REFER TO STRUCTURAL SHEET S2.0 FOR CORE DETAILS.

M18 HVAC CONTROL PANEL. MOUNT TO WALL PER DETAIL 1/M-501.

M19 HVAC CONTROL UNINTERRUPTIBLE POWER SUPPLY. MOUNT TO WALL PER DETAIL 1/M-501.

M20 THREADED ROD HANGERS FOR SUSPENDED PIPING RUNNING PERPENDICULAR TO EXISTING WOOD JOISTS SHALL ATTACH DIRECTLY TO JOISTS PER DETAIL 2/M-501.

M21 THREADED ROD HANGERS FOR SUSPENDED PIPING RUNNING PARALLEL TO EXISTING WOOD JOISTS SHALL ATTACH TO STRUT SPANNING EXISTING JOISTS PER DETAIL 2/M-501.

M22 FLOOR MOUNTED PIPE SUPPORTS. REFER TO DETAIL 5/M-501.

SHEET NOTES

1. SUPPORT CEILING SUSPENDED PIPING PER DETAIL 1/M-502 AND 2/M-502.
2. SUPPORT FLOOR MOUNTED PIPING PER DETAIL 5/M-501.
3. PROVIDE METAL JACKETING FOR ALL PVC PIPING LOCATED OUTDOORS.
4. MOUNT VFDs AND CONTROL PANELS TO METAL STUD WALL PER 1/M-501 AND TO CMU WALL PER 6/M-501.
5. PIPING PENETRATIONS OF FIRE-RATED STUD WALLS SHALL BE PER DETAIL 1/M-505 FOR UNINSULATED METAL PIPING AND 2/M-505 FOR INSULATED METAL PIPING.

WALL LEGEND (REFER TO A-102)

- EXISTING CMU WALL
- EXISTING METAL FRAMED WALL
- METAL FRAMED WALL
- FIRE-RATED ASSEMBLY

MECHANICAL - FLOOR PLAN

SCALE: 1/4" = 1'-0"

0 2' 4' 8' 12'
1/4" = 1'-0"

NORTH

TURPIN & RATTAN ENGINEERING, INC.
CONSULTING ENGINEERS
4719 PALM AVENUE
LA MESA, CA 91941-5221
619 / 466 / 5224 FAX 466 / 5233
E-MAIL: ENGINEER@TREIEG.COM

TREI PROJECT # 16432.501

PREPARED FOR THE
GROSSMONT UNION HIGH SCHOOL DISTRICT
P.O.BOX 1043
LA MESA, CALIFORNIA

PREPARED BY
PLATT/WHITELAW ARCHITECTS, INC.
4094 30TH STREET
SAN DIEGO, CA (619)546-4320 FAX (619)546-4350

CERTIFICATION STAMP
DIV. OF THE STATE ARCHITECT
OFFICE OF REGULATORY REVIEW
04-115930
FILE 101144
AC. FLS
DATE 04/21/17

NO. M35647
Exp. 06/30/18
REGISTERED PROFESSIONAL ENGINEER
MICHAEL J. WHITELAW
STATE OF CALIFORNIA
4/18/17

MECHANICAL - FLOOR PLAN
CENTRAL PLANT EQUIPMENT UPGRADE
VALHALLA HIGH SCHOOL
1725 HILLSDALE ROAD
EL CAJON, CA 92019

REVISION	DATE

PROJECT NO. PWA #0364.10
FILE NAME:
DATE: 4/14/2017 DRAWN: EL/PS CHECKED: CR/MR

M-201

SHEET NO. OF SHEETS

KEYNOTES

M14 8" CATEGORY IV 6A6 FLUE THRU ROOF. TERMINATE WITH MANUFACTURER'S TERMINATION KIT MINIMUM 36" ABOVE ROOF SURFACE.

M15 8" DIRECT VENT COMBUSTION AIR INTAKE. PROVIDE GOOSENECK. MINIMUM 30" FROM BOILER FLUE DISCHARGE. COVER OPENING WITH 1/2" GALVANIZED WIRE SCREEN.

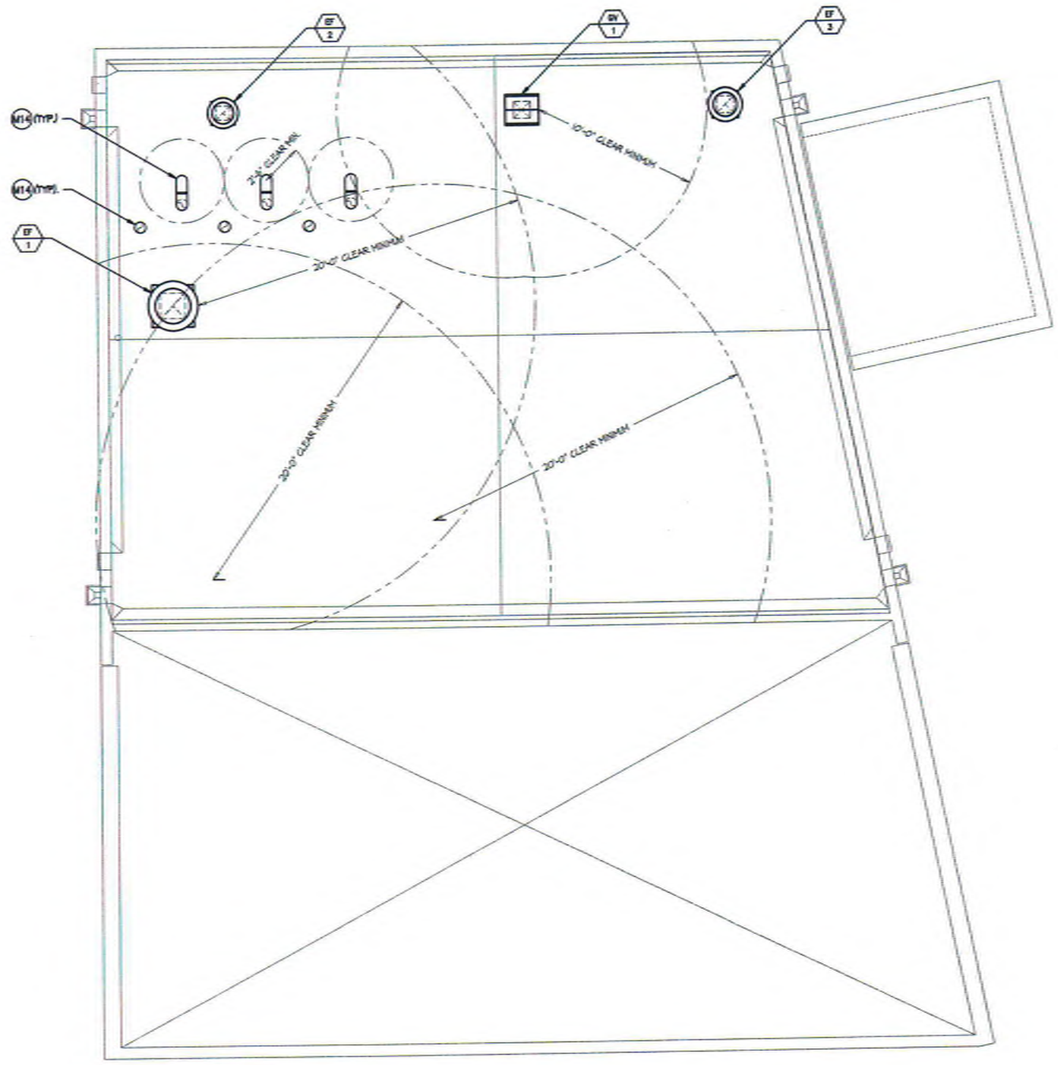

SHEET NOTE

1. FIELD VERIFY LOCATION OF REFRIGERATION ROOF VENTILATION SYSTEM AND REFRIGERATION RELIEF DISCHARGE TERMINATIONS SUCH THAT THERE ARE NO OPENINGS TO THE BUILDING WITHIN 20'-0".

MECHANICAL - ROOF PLAN

SCALE: 1/4" = 1'-0"

TURPIN & RATTAN ENGINEERING, INC.
CONSULTING ENGINEERS
4719 PALM AVENUE
LA MESA, CA 91941-5321
619 / 456 / 6224 FAX 466 / 6333
E-MAIL: ENGINEER@TREISD.COM

TREI PROJECT # 16432.SD1

PREPARED FOR THE
GROSSMONT UNION HIGH SCHOOL DISTRICT
P.O.BOX 1043
LA MESA, CALIFORNIA

PREPARED BY
PLATT/WHITELAW ARCHITECTS, INC.
4024 30TH STREET
SAN DIEGO, CA (619)546-4520 FAX (619)546-4560

CERTIFICATION STAMP
DIV. OF THE STATE ARCHITECT
OFFICE OF REGULATION SERVICES
01-115930
FILE #3744
AC. ELS JRL AMP
DATE 042717

4/18/17

MECHANICAL - ROOF PLAN

CENTRAL PLANT EQUIPMENT UPGRADE

VALHALLA HIGH SCHOOL
1725 HILLSDALE ROAD
EL CAJON, CA 92019

REVISION	DATE

PROJECT NO. FMA R0861.10

FILE NAME:

DATE: 4/14/2017 DRAWN: EL/PS CHECKED: CR/MR

M-202

SHEET NO. 1 OF SHEETS

J:\16\16432.SD1 - GUHSD Valhalla HS Central Plant Upgrade\16432.10-Arch\dwg\16432.10_M-202_MECHANICAL - ROOF PLAN.dwg 04/18/2017 18:12

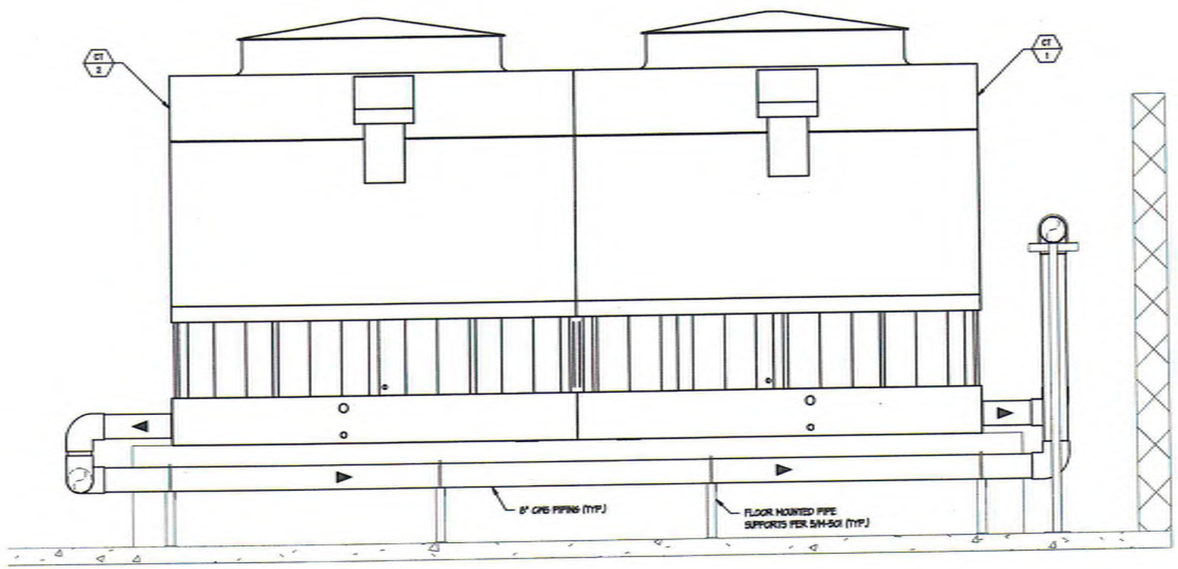

COOLING TOWER SECTION

1 / M-301

SCALE: 1/4" = 1'-0"

0 2' 4' 8' 12'

1/4" = 1'-0"

TURPIN & RATTAN ENGINEERING, INC.
CONSULTING ENGINEERS
4719 PALM AVENUE
LA MESA, CA 91941-5221
619 / 466 / 6324 FAX 466 / 6333
E-MAIL: ENGINEER@TREng.com

TRE: PROJECT # 16432.501

PREPARED FOR THE
GROSSMONT UNION HIGH SCHOOL DISTRICT
P.O.BOX 1043
LA MESA, CALIFORNIA

PREPARED BY
PLATT/WHITELAW ARCHITECTS, INC.
4094 90TH STREET
SAN DIEGO, CA (619)546-4920 FAX (619)546-4980

DIVISION OF THE STATE ARCHITECT
OFFICE OF REGULATION SERVICES
04-115030
FILE #01-14
AC. FD.
DATE 04211

M. M3447
Exp. 06/30/18
4/11/17

MECHANICAL SECTIONS

CENTRAL PLANT EQUIPMENT UPGRADE

VALHALLA HIGH SCHOOL
1725 HILLSDALE ROAD
EL CAJON, CA 92019

REVISION	DATE

PROJECT NO. FINA #0861.10

FILE NAME:

DATE: 4/04/2017 DRAWN: EL/PS CHECKED: CR/MR

M-301

SHEET NO. 1 OF SHEETS

J:\VS\16432.501 - GUHSD Valhalla HS Central Plant Upgrade\16432.10\Acad\dwg\16432.10_M-301_MECHANICAL SECTIONS.dwg 04/18/2017 19:12

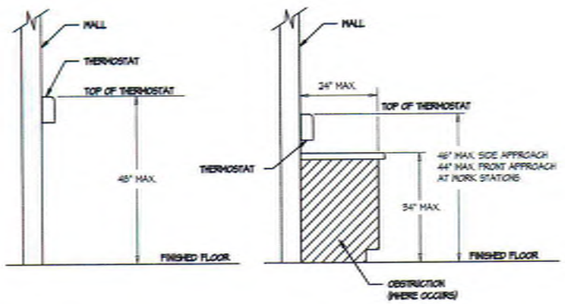

THERMOSTAT MOUNTING DETAIL (1 / M-501)

NO SCALE

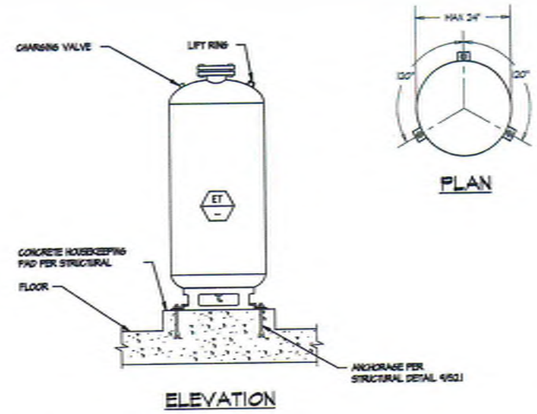

EXPANSION TANK MOUNTING DETAIL (2 / M-501)

NO SCALE

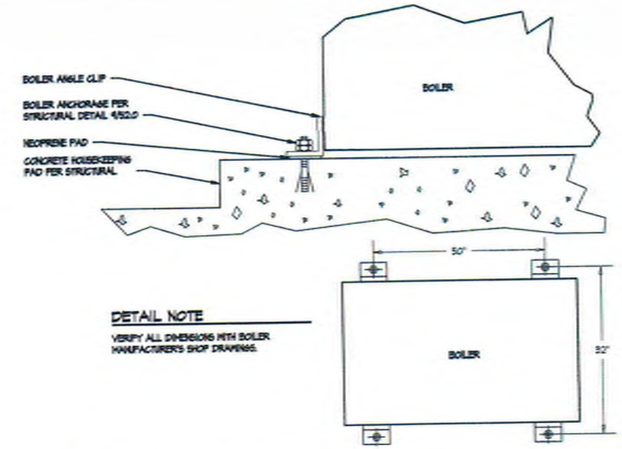

BOILER MOUNTING DETAIL (3 / M-501)

NO SCALE

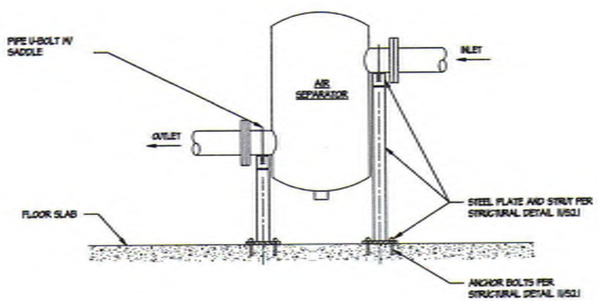

AIR SEPARATOR MOUNTING DETAIL (4 / M-501)

NO SCALE

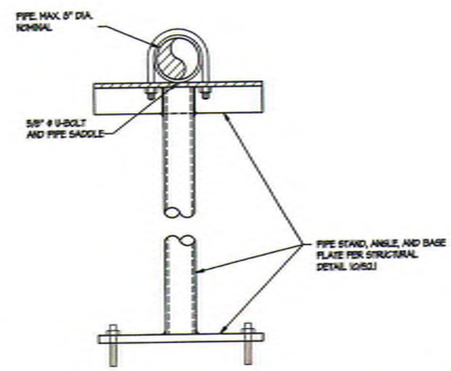

FLOOR MOUNTED PIPING SUPPORT DETAIL (5 / M-501)

NO SCALE

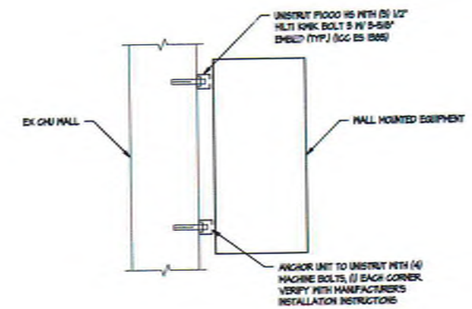

WALL MOUNTED EQUIPMENT ANCHORAGE (CMU WALL) (6 / M-501)

NO SCALE

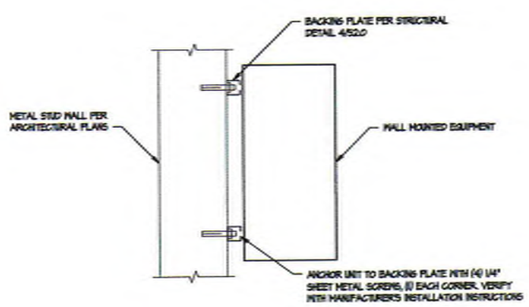

WALL MOUNTED EQUIPMENT ANCHORAGE (FRAME WALL) (7 / M-501)

NO SCALE

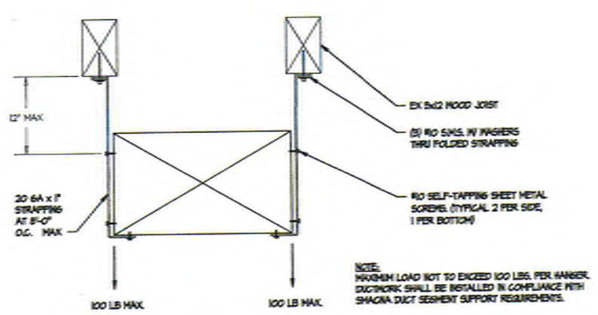

DUCT HANGER SUPPORT DETAIL (8 / M-501)

NO SCALE

TURPIN & RATTAN
ENGINEERING, INC.
CONSULTING ENGINEERS
4719 PALM AVENUE
LA MESA, CA 91941-5221
619 / 466 / 6224 FAX 466 / 6233
E-MAIL: ENGINEER@TREIEO.COM

TREI PROJECT # 16432.501

PREPARED FOR THE
GROSSMONT UNION HIGH SCHOOL DISTRICT
P.O.BOX 1043
LA MESA, CALIFORNIA

PREPARED BY
PLATT/WHITELAW ARCHITECTS, INC.
4094 30TH STREET
SAN DIEGO, CA (619)546-4326 FAX (619)546-4960

IDENTIFICATION STAMP
DIV. OF THE STATE ARCHITECT
OFFICE OF PUBLIC SCHOOL CONSTRUCTION
04-115930
FILE 43-14
AC.
DATE 04 2 X 17

PROFESSIONAL ENGINEER (MECHANICAL) STATE OF CALIFORNIA
NO. M3447
Exp. 12/31/18
4/18/17

REGISTERED ARCHITECT STATE OF CALIFORNIA

MECHANICAL DETAILS

CENTRAL PLANT EQUIPMENT UPGRADE

VALHALLA HIGH SCHOOL
1726 HILLSDALE ROAD
EL CAJON, CA 92019

REVISION	DATE

PROJECT NO. FMA #056.110

FILE NAME:

DATE: 4/14/2017 DRAWN: EL/PS CHECKED: CR/MR

M-501

SHEET NO. : OF SHEETS

J:\16\16432.501 - GUHSD Valhalla HS Central Plant Upgrade\16432.10\Autoplot\16432.10_M-501_MECHANICAL DETAILS.dwg 04/28/2017 11:42

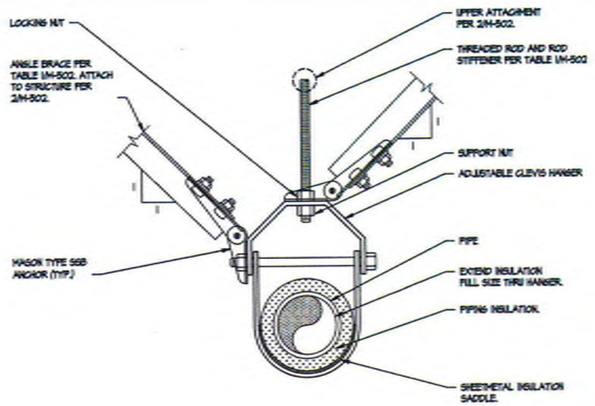

ELEVATION

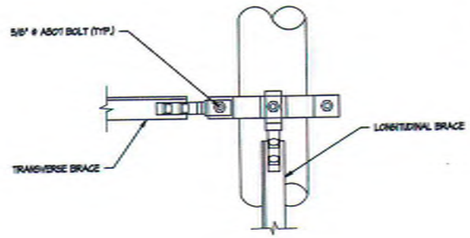

PLAN

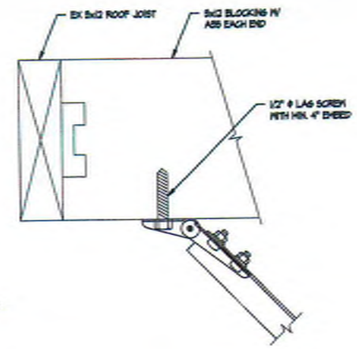

SEISMIC BRACING ANCHOR ATTACHMENT TO WOOD

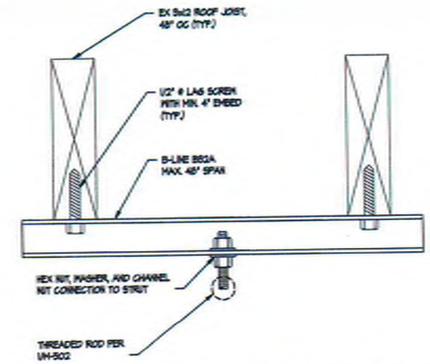

ROD HANGER ATTACHMENT TO STRUT

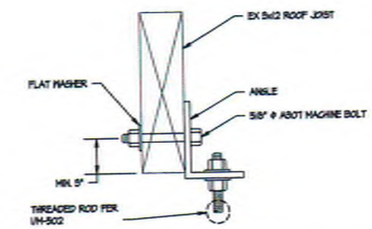

ROD HANGER ATTACHMENT TO WOOD

HANGER AND BRACING TABLE

PIPE DIA. (IN)	MAX. WEIGHT PER FOOT (LB)	HANGER ROD DIA. (IN)	MAX. HANGER SPACING (IN)	MAX. UNBRACED ROD LENGTH (IN)	ROD STIFFENER ANGLE SIZE (IN)	BRACE ANGLE SIZE (IN)	MAX. BRACE ANGLE SPACING (FT.)	
							TRANS.	LONG.
1	2.8	3/8	22	18	1 x 1 x 1/8	NR	NR	NR
1-1/4	3.8	3/8	22	15	1 x 1 x 1/8	NR	NR	NR
1-1/2	4.5	3/8	22	14	1 x 1 x 1/8	NR	NR	NR
2	6.2	3/8	22	13	1 x 1 x 1/8	NR	NR	NR
2-1/2	4.1	1/2	51	14	1 x 1 x 1/8	NR	NR	NR
3	12.1	1/2	51	14	1-1/2 x 1-1/2 x 1/4	2 x 2 x 1/4	40	40
4	18.5	5/8	94	51	1-1/2 x 1-1/2 x 1/4	2 x 2 x 1/4	26	26
6	34.8	3/4	46	32	1-1/2 x 1-1/2 x 1/4	2 x 2 x 1/4	20	20
8	55.1	7/8	46	46	1-1/2 x 1-1/2 x 1/4	2 x 2 x 1/4	12	12

NOTE: TRANSVERSE AND LONGITUDINAL BRACES SHALL BE PROVIDED AT THE SPACING INDICATED IN THIS TABLE AND AT EACH CHANGE IN DIRECTION. LONGITUDINAL BRACING MAY BE OMITTED AT CHANGE IN DIRECTION WHERE A TRANSVERSE BRACE IS PROVIDED WITHIN 24"

PIPE HANGER DETAIL (1 / M-502)

NO SCALE

PIPE HANGER UPPER ATTACHMENT DETAILS (2 / M-502)

NO SCALE

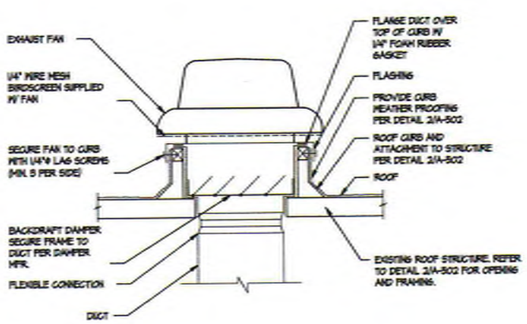

ROOF MOUNTED EXHAUST FAN DETAIL (3 / M-502)

NO SCALE

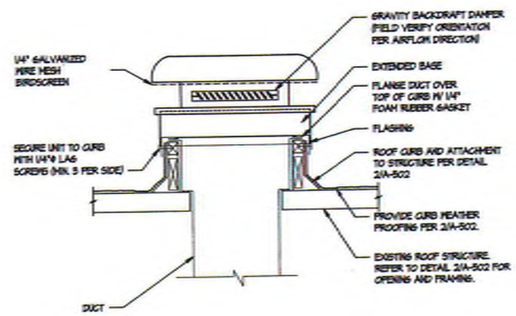

ROOF MOUNTED GRAVITY VENTILATOR DETAIL (4 / M-502)

NO SCALE

TURPIN & RATTAN ENGINEERING, INC.
CONSULTING ENGINEERS
4319 PALM AVENUE
LA MESA, CA 91941-5221
619 / 466 / 6324 FAX 466 / 6233
E-MAIL: ENGINEER@TREIEO.COM

TREI PROJECT # 16432.501

PREPARED FOR THE: GROSSMONT UNION HIGH SCHOOL DISTRICT
P.O.BOX 1043
LA MESA, CALIFORNIA

PREPARED BY: PLATT/WHITELAW ARCHITECTS, INC.
4094 30TH STREET
SAN DIEGO, CA (619)546-4525 FAX (619)549-4550

CERTIFICATION SIGNATURE: DSA, OFFICE OF REGULATION SERVICES
04-115930
FILE #
PLS. AC. 042717
DATE

4/18/17

MECHANICAL DETAILS

CENTRAL PLANT EQUIPMENT UPGRADE

VALHALLA HIGH SCHOOL
1725 HILLSDALE ROAD
EL CAJON, CA 92019

REVISION	DATE

PROJECT NO. FMA #056130

FILE NAME:

DATE: 4/14/2017 DRAWN: EL/PS CHECKED: CR/MR

M-502

SHEET NO. OF SHEETS

J:\16\16432.501 - GUHSD Valhalla HS Central Plant Upgrade\16432.10\Acadproj\16432.10_M-502_MECHANICAL DETAILS.dwg 04/26/2017 11:43

UL/UL SYSTEM NO. W-L-1054
METAL PIPE THROUGH 1-HR. OR 2-HR. GYPSUM WALL ASSEMBLY
F RATING = 1-HR. AND 2-HR.
T RATING = 0-HR
L RATING AT AMBIENT = LESS THAN 1 CFM/SQ. FT.
L RATING AT 400°F = 4 CFM/SQ. FT.

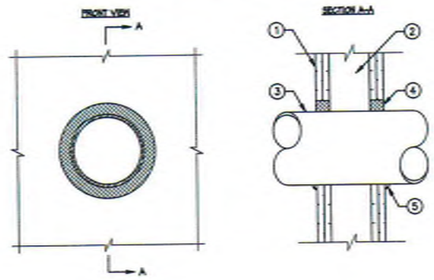

KEYNOTES

1. GYPSUM WALL ASSEMBLY (UL/ULC CLASSIFIED U300 OR W400 SERIES) (1-HR. OR 2-HR. FIRE- RATING) (2-HR. SHOWN)
2. (NOT SHOWN). WOOD STUDS TO CONSIST OF NOMINAL 2"x4" LUMBER. STEEL STUDS TO BE MINIMUM 2-1/2" WIDE.
3. PENETRATING ITEM TO BE ONE OF THE FOLLOWING:
   A. MAXIMUM 30" NOMINAL DIAMETER STEEL PIPE (SCHEDULE 10 OR HEAVIER).
   B. MAXIMUM 30" NOMINAL DIAMETER COPPER PIPE.
   C. MAXIMUM 6" NOMINAL DIAMETER COPPER PIPE.
   D. MAXIMUM 6" NOMINAL DIAMETER STEEL CONDUIT.
   E. MAXIMUM 4" NOMINAL DIAMETER EMT.
4. MINIMUM 5/8" DEPTH HILTI FS-ONE INTUMESCENT FIRESTOP SEALANT.
5. MINIMUM 1/2" BEAD HILTI FS-ONE INTUMESCENT FIRESTOP SEALANT AT POINT OF CONTACT.

NOTES

1. MAXIMUM DIAMETER OF OPENING:
   A. 52-1/4" FOR STEEL STUD WALLS.
   B. 14-1/2" FOR WOOD STUD WALLS.
2. ANNULAR SPACE = MINIMUM 0", MAXIMUM 2-1/4".
3. PIPE MAY BE INSTALLED WITH CONTINUOUS POINT OF CONTACT.
4. PIPE MAY BE INSTALLED AT AN ANGLE NOT GREATER THAN 45° FROM PERPENDICULAR.

METAL PIPE THROUGH GYPSUM WALL (1 & 2 HOUR RATING)

1 / M-503

NO SCALE

UL/UL SYSTEM NO. W-L-5021
INSULATED METAL PIPE THROUGH 1-HR. OR 2-HR. GYPSUM WALL ASSEMBLY
F RATING = 1-HR. AND 2-HR.
T-RATING = 1/2-HR, 3/4-HR, HR, AND 1-1/4 HR. (SEE UL FIRE RESISTANCE DIRECTORY)
L-RATING AT AMBIENT = 4 CFM/SQ. FT.
L-RATING AT 400°F = LESS THAN 1 CFM/SQ. FT.

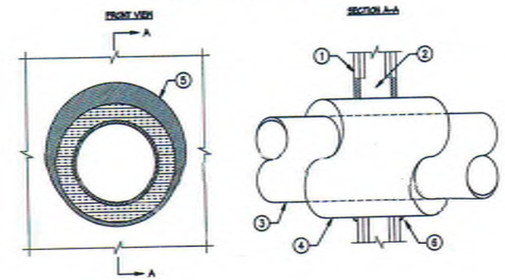

KEYNOTES

1. GYPSUM WALL ASSEMBLY (UL/ULC CLASSIFIED U300 OR W400 SERIES) (1-HR. OR 2-HR. FIRE- RATING) (2-HR. SHOWN)
2. (NOT SHOWN). WOOD STUDS TO CONSIST OF NOMINAL 2"x4" LUMBER. STEEL STUDS TO BE MINIMUM 2-1/2" WIDE.
3. PENETRATING ITEM TO BE ONE OF THE FOLLOWING:
   A. MAXIMUM 12" NOMINAL DIAMETER STEEL PIPE (SCHEDULE 10 OR HEAVIER).
   B. MAXIMUM 6" NOMINAL DIAMETER COPPER PIPE.
   C. MAXIMUM 4" NOMINAL DIAMETER STEEL CONDUIT.
   D. MAXIMUM 4" NOMINAL DIAMETER EMT.
4. MAXIMUM 2" THICK GLASS-FIBER PIPE INSULATION.
5. MINIMUM 5/8" DEPTH HILTI FS-ONE HIGH PERFORMANCE INTUMESCENT FIRESTOP SEALANT.
6. MINIMUM 1/2" BEAD HILTI FS-ONE HIGH PERFORMANCE INTUMESCENT FIRESTOP SEALANT AT POINT OF CONTACT.

NOTES

1. MAXIMUM DIAMETER OF OPENING = 18"
2. ANNULAR SPACE = MINIMUM 0", MAXIMUM 1-1/8".

INSULATED METAL PIPE THROUGH GYPSUM WALL (1 & 2 HOUR RATING)

2 / M-503

NO SCALE

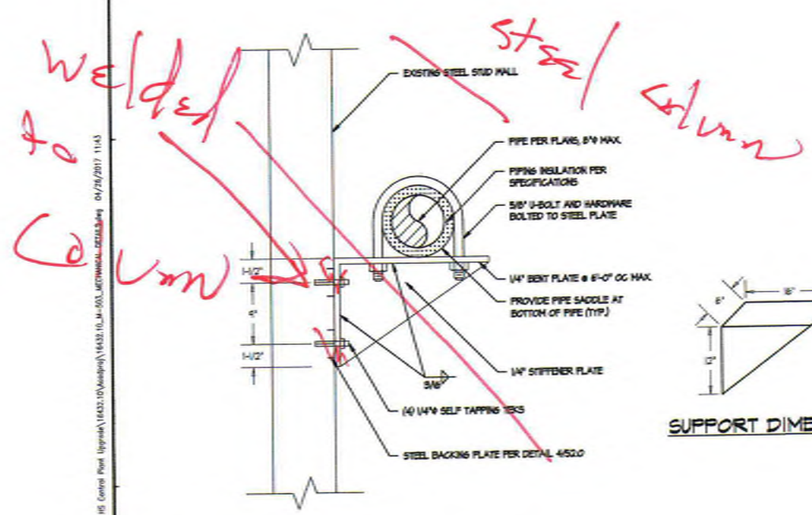

SUPPORT DIMENSIONS

WALL MOUNTED PIPE SUPPORT AT STUD WALL

3 / M-503

NO SCALE

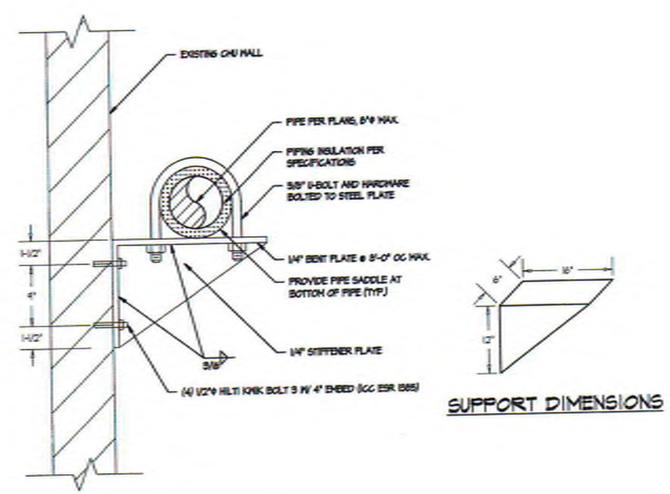

SUPPORT DIMENSIONS

WALL MOUNTED PIPE SUPPORT AT CMU WALL

4 / M-503

NO SCALE

TURPIN & RATTAN ENGINEERING, INC.
CONSULTING ENGINEERS
4719 PALM AVENUE
LA MESA, CA 91941-5221
619 / 466 / 5224 FAX 466 / 5233
E-MAIL: ENGINEER@TREI99.COM

TREI PROJECT # 16432.501

PREPARED FOR THE
GROSSMONT UNION HIGH SCHOOL DISTRICT
P.O.BOX 1048
LA MESA, CALIFORNIA

PREPARED BY
PLATT/WHITELAW ARCHITECTS, INC.
4094 30TH STREET
SAN DIEGO, CA (619)640-4320 FAX (619)640-4350

CERTIFICATION BLOCK
DSA, STRUCTURAL SAFETY
OFFICE OF REGULATION SERVICES
04-115930
FILE COPY
A/C
DATE 04/27/17

MECHANICAL DETAILS

CENTRAL PLANT EQUIPMENT UPGRADE

VALHALLA HIGH SCHOOL
1725 HILLSDALE ROAD
EL CAJON, CA 92019

REVISION	DATE

PROJECT NO. PWA #C86110

FILE NAME:

DATE: 4/14/2017 DRAWN: EL/PS CHECKED: CR/MR

M-503

SHEET NO. 1 OF SHEETS

J:\16\16432.501 - GUHSD Valhalla HS Central Plant Upgrade\16432.10\Acad\proj\16432.10_M-503_MECHANICAL DETAILS.dwg 04/26/2017 11:43

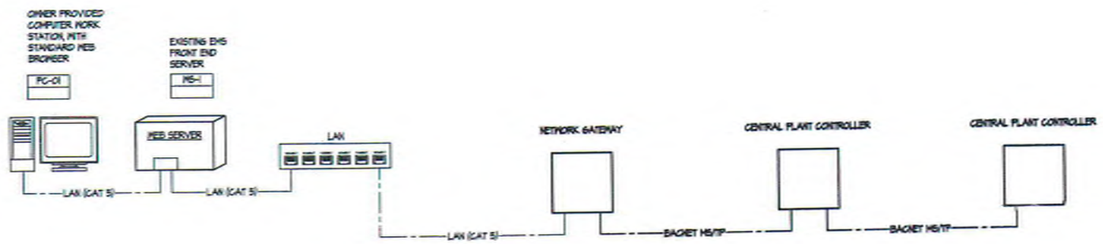

HVAC CONTROL SYSTEM ARCHITECTURE

NO SCALE

1 / M-601

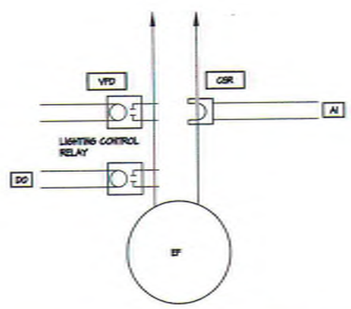

DDC HARDWARE I/O POINT LIST				
POINT DESCRIPTION	AI	DI	AO	DO
EF-1 FAN VFD START/STOP				X
EF-1 FAN VFD BACNET INTERFACE	X			
EF-1 FAN VFD SPEED COMMAND			X	
EF-1 FAN CURRENT SENSOR	X			
CHILLER ROOM TEMPERATURE	X			
CHILLER ROOM LIGHTING CONTROL		X		
CHILLER ROOM REFRIGERANT ALARM - LEVEL 1	X			
CHILLER ROOM REFRIGERANT ALARM - LEVEL 2	X			
POINT TOTALS	AI 5	DI 1	AO 1	DO 1

SEQUENCE OF OPERATION

1. START/STOP:
   1.1. THE EXHAUST FAN VFD SHALL MODULATE TO MAINTAIN THE RESPECTIVE ROOM TEMPERATURE SETPOINT OF 85°F (ADJ.). MINIMUM VFD SPEED SHALL BE 20 Hz. FAN SHALL DE-ENERGIZE WHEN ROOM TEMPERATURE IS BELOW SETPOINT AT MINIMUM SPEED.
   1.2. THE EXHAUST FAN SHALL ENERGIZE AND THE VFD SHALL OPERATE AT 60 Hz UPON DETECTION OF A REFRIGERANT LEAK.
2. LIGHTING CONTROL INTERLOCK:
   2.1. THE EXHAUST FAN SHALL BE INTERLOCKED TO THE LIGHTING CONTROL SYSTEM OF THE ZONE IT IS SERVING. THE EXHAUST FAN SHALL BE COMMANDED ON WHEN THE LIGHTING IN THE ZONE IS ON. LIGHTING INTERLOCK SHALL OPERATE INDEPENDENT OF ROOM TEMPERATURE CONTROL.
3. ALARM:
   3.1. WHEN THE FAN IS ENERGIZED, THE FAN STATUS SHALL BE DETERMINED BY THE CURRENT SENSING RELAY. AFTER AN OPERATOR DEFINABLE FEEDBACK TIME DELAY, IF THE MINIMUM CURRENT LEVEL IS NOT OBTAINED, AN ALARM SHALL BE GENERATED TO THE EMCS.
   3.2. UPON DETECTION OF A REFRIGERANT LEAK, AN ALARM SHALL BE GENERATED TO THE EMCS.

CHILLER ROOM EXHAUST FAN CONTROL (EF-1)

NO SCALE

3 / M-601

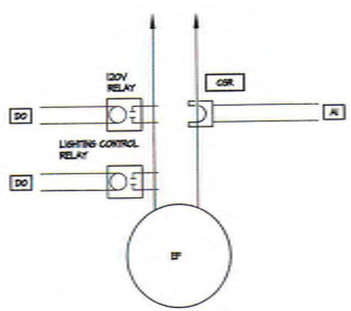

DDC HARDWARE I/O POINT LIST				
POINT DESCRIPTION	AI	DI	AO	DO
EF-2 START/STOP				X
EF-2 CURRENT	X			
BOILER ROOM TEMPERATURE	X			
BOILER ROOM LIGHTING CONTROL		X		
EF-3 START/STOP				X
EF-3 CURRENT	X			
ELECTRICAL ROOM TEMPERATURE	X			
ELECTRICAL ROOM LIGHTING CONTROL		X		
POINT TOTALS	AI 4	DI 2	AO 2	DO 2

SEQUENCE OF OPERATION

1. START/STOP:
   1.1. THE EXHAUST FAN SHALL START AND STOP TO MAINTAIN THE RESPECTIVE ROOM TEMPERATURE SETPOINT OF 85°F (ADJ.).
2. LIGHTING CONTROL INTERLOCK:
   2.1. THE EXHAUST FAN SHALL BE INTERLOCKED TO THE LIGHTING CONTROL SYSTEM OF THE ZONE IT IS SERVING. THE EXHAUST FAN SHALL BE COMMANDED ON WHEN THE LIGHTING IN THE ZONE IS ON. LIGHTING INTERLOCK SHALL OPERATE INDEPENDENT OF ROOM TEMPERATURE CONTROL.
3. ALARM:
   3.1. WHEN THE FAN IS ENERGIZED, THE FAN STATUS SHALL BE DETERMINED BY THE CURRENT SENSING RELAY. AFTER AN OPERATOR DEFINABLE FEEDBACK TIME DELAY, IF THE MINIMUM CURRENT LEVEL IS NOT OBTAINED, AN ALARM SHALL BE GENERATED TO THE EMCS.

TYPICAL EXHAUST FAN CONTROL (EF-2 AND EF-3)

NO SCALE

3 / M-601

TURPIN & RATTAN ENGINEERING, INC.
CONSULTING ENGINEERS
4719 PALM AVENUE
LA MESA, CA 91941-5221
619 / 466 / 5224 FAX 466 / 6233
E-MAIL: ENGINEER@TREBCO.COM

TREI PROJECT # 16432.501

PREPARED FOR THE
GROSSMONT UNION HIGH SCHOOL DISTRICT
P.O.BOX 1043
LA MESA, CALIFORNIA

PREPARED BY
PLATT/WHITELAW ARCHITECTS, INC.
4094 30TH STREET
SAN DIEGO, CA (619)546-4320 FAX (619)546-4320

CERTIFICATION STAMP
DIV. OF THE STATE ARCHITECT
OFFICE OF REGULATION SERVICES
04-115050
FILE 10-14
AC. FLG. 042717
DATE

4/18/17

MECHANICAL CONTROLS

CENTRAL PLANT EQUIPMENT UPGRADE

VALHALLA HIGH SCHOOL
1725 HILLSDALE ROAD
EL CAJON, CA 92019

REVISION	DATE

PROJECT NO. FWA #0861.10

FILE NAME:

DATE: 4/14/2017 DRAWN: EL/PS CHECKED: CR/MR

M-601

SHEET NO. : OF SHEETS

A:\16432.501 - GUSD Valhalla HS Central Plant Upgrade\16432.10\Drawings\16432.10_M-601_MECHANICAL CONTROLS.dwg 04/18/2017 10:12

CENTRAL PLANT DDC HARDWARE I/O POINT LIST

POINT DESCRIPTION	AI	DI	AO	DO
CH-1 START/STOP				X
CH-1 CHILLED WATER SUPPLY TEMPERATURE RESET			X	
CH-1 CHW MOTORIZED ISOLATION VALVE COMMAND				X
CH-1 CHW MOTORIZED ISOLATION VALVE POSITION FEEDBACK		X		
CH-1 CHW SUPPLY TEMPERATURE	X			
CH-1 CHW RETURN TEMPERATURE	X			
CH-1 EVAPORATOR DIFFERENTIAL PRESSURE	X			
CH-1 CW MOTORIZED ISOLATION VALVE COMMAND				X
CH-1 CW MOTORIZED ISOLATION VALVE POSITION FEEDBACK		X		
CH-1 CW SUPPLY TEMPERATURE	X			
CH-1 CW RETURN TEMPERATURE	X			
CH-1 BACNET INTERFACE	X			
P-1 CHW PUMP START/STOP				X
P-1 CHW PUMP BACNET INTERFACE	X			
P-1 CHW PUMP SPEED COMMAND			X	
P-1 CHW PUMP CURRENT SENSOR	X			
CH-2 START/STOP				X
CH-2 CHILLED WATER SUPPLY TEMPERATURE RESET			X	
CH-2 CHW MOTORIZED ISOLATION VALVE COMMAND				X
CH-2 CHW MOTORIZED ISOLATION VALVE POSITION FEEDBACK		X		
CH-2 CHW SUPPLY TEMPERATURE	X			
CH-2 CHW RETURN TEMPERATURE	X			
CH-2 EVAPORATOR DIFFERENTIAL PRESSURE	X			
CH-2 CW MOTORIZED ISOLATION VALVE COMMAND				X
CH-2 CW MOTORIZED ISOLATION VALVE POSITION FEEDBACK		X		
CH-2 CW SUPPLY TEMPERATURE	X			
CH-2 CW RETURN TEMPERATURE	X			
CH-2 BACNET INTERFACE	X			
P-2 CHW PUMP START/STOP				X
P-2 CHW PUMP BACNET INTERFACE	X			
P-2 CHW PUMP SPEED COMMAND			X	
P-2 CHW PUMP CURRENT SENSOR	X			
CHW LOOP SUPPLY TEMPERATURE	X			
CHW LOOP RETURN TEMPERATURE	X			
POINT TOTALS	AI 12	DI 4	AO 4	DO 8

CENTRAL PLANT DDC HARDWARE I/O POINT LIST

POINT DESCRIPTION	AI	DI	AO	DO
B-1 START/STOP				X
B-1 HEATING HOT WATER SUPPLY TEMPERATURE RESET			X	
B-1 HHW MOTORIZED ISOLATION VALVE COMMAND				X
B-1 HHW MOTORIZED ISOLATION VALVE POSITION FEEDBACK		X		
B-1 HHW SUPPLY TEMPERATURE	X			
B-1 HW RETURN TEMPERATURE	X			
B-1 ALARM	X			
B-1 BACNET INTERFACE	X			
B-2 START/STOP				X
B-2 HEATING HOT WATER SUPPLY TEMPERATURE RESET			X	
B-2 HHW MOTORIZED ISOLATION VALVE COMMAND				X
B-2 HHW MOTORIZED ISOLATION VALVE POSITION FEEDBACK		X		
B-2 HHW SUPPLY TEMPERATURE	X			
B-2 HHW RETURN TEMPERATURE	X			
B-2 ALARM	X			
B-2 BACNET INTERFACE	X			
B-3 START/STOP				X
B-3 HEATING HOT WATER SUPPLY TEMPERATURE RESET			X	
B-3 HHW MOTORIZED ISOLATION VALVE COMMAND				X
B-3 HHW MOTORIZED ISOLATION VALVE POSITION FEEDBACK		X		
B-3 HHW SUPPLY TEMPERATURE	X			
B-3 HHW RETURN TEMPERATURE	X			
B-3 ALARM	X			
B-3 BACNET INTERFACE	X			
P-5 HHW PUMP START/STOP				X
P-5 HHW PUMP BACNET INTERFACE	X			
P-5 HHW PUMP SPEED COMMAND			X	
P-5 HHW PUMP CURRENT SENSOR	X			
P-6 HHW PUMP START/STOP				X
P-6 HHW PUMP BACNET INTERFACE	X			
P-6 HHW PUMP SPEED COMMAND			X	
P-6 HHW PUMP CURRENT SENSOR	X			
HHW LOOP SUPPLY TEMPERATURE	X			
HHW LOOP RETURN TEMPERATURE	X			
POINT TOTALS	AI 12	DI 5	AO 5	DO 8

CENTRAL PLANT DDC HARDWARE I/O POINT LIST

POINT DESCRIPTION	AI	DI	AO	DO
CT-1 FAN VFD START/STOP				X
CT-1 FAN VFD BACNET INTERFACE	X			
CT-1 FAN VFD SPEED COMMAND			X	
CT-1 FAN CURRENT SENSOR	X			
CT-1 BASIN LOW LEVEL ALARM		X		
CT-1 BASIN HIGH LEVEL ALARM		X		
CT-1 CW SUPPLY TEMPERATURE	X			
CT-1 CW RETURN TEMPERATURE	X			
CT-2 FAN VFD START/STOP				X
CT-2 FAN VFD BACNET INTERFACE	X			
CT-2 FAN VFD SPEED COMMAND			X	
CT-2 FAN CURRENT SENSOR	X			
CT-2 BASIN LOW LEVEL ALARM		X		
CT-2 BASIN HIGH LEVEL ALARM		X		
CT-2 CW SUPPLY TEMPERATURE	X			
CT-2 CW RETURN TEMPERATURE	X			
P-3 CW PUMP START/STOP				X
P-3 CW PUMP BACNET INTERFACE	X			
P-3 CW PUMP SPEED COMMAND			X	
P-3 CW PUMP CURRENT SENSOR	X			
P-4 CW PUMP START/STOP				X
P-4 CW PUMP BACNET INTERFACE	X			
P-4 CW PUMP SPEED COMMAND			X	
P-4 CW PUMP CURRENT SENSOR	X			
CW LOOP SUPPLY TEMPERATURE	X			
CW LOOP RETURN TEMPERATURE	X			
CHW FLOW METER	X			
CHW MOTORIZED BYPASS VALVE COMMAND				X
CHW MOTORIZED BYPASS VALVE POSITION FEEDBACK		X		
POINT TOTALS	AI 12	DI 5	AO 4	DO 8

CHILLED WATER SYSTEM SEQUENCE OF OPERATION

1. The CHW system will be enabled when any AHU fan system is running and any fan system chilled water valve is above 5% open. The CHW system will be disabled when all AHU fan systems are off or all fan system chilled water valves are less than 5% open for more than 20 minutes. System has a minimum off time of 30 minutes.

2. When the CHW system is enabled -
   a. The lead chiller, CH-1 or 2, will be enabled.
   b. The lag chiller, CH-1 or 2, will be enabled when the lead chiller %FLA exceeds 80% for 15 minutes or the lead chiller reports a Fault Code. The lag chiller will be disabled when the lead chiller %FLA drops below 60% for 10 minutes and there is no Fault Code reported by the lead chiller.
   c. The chillers will operate to maintain the CHW supply temperature at setpoint, 42.0 deg F (adj).
   d. The bypass valve will be modulated to maintain the minimum CHW flow through the operating chillers.
   e. The lead and lag chillers will alternate on a weekly basis to equalize runtime on the chillers.
   f. If the chilled water supply temperature rises 8 deg F or more above the chilled water temperature setpoint and the difference between the chilled water supply temperature and chilled water return temperature is less than 4 deg F for 20 minutes then the lead chiller will be disabled and the lag chiller will become the lead chiller and an alarm will be generated. This condition will remain in effect until the alarm is acknowledged and the condition is manually reset by the operator.

3. Chilled Water Pumps, CHWP1,CHW P2
   a. The lead CHW pump will be started when at least one chiller CHW isolation valve is commanded open. The lead CHW pump will stop when both chiller CHW isolation valves are commanded closed.
   b. The lag CHW pump will be started when either the lead CHW pump fails to run or the lead pumps is running at 95% speed or higher for 10 minutes. The pumps will run at the same speed. The lag CHW pump will stop when the pump speeds drop below 40%.
   c. The speed of the CHW pumps will be modulated in unison to maintain the CHW differential pressure at setpoint.
   i. The CHW system differential pressure setpoint will be incremented 1.0 psid every 1 minute when any AHU fan system CHW control valve is open more than 95%.
   ii. The CHW system differential pressure setpoint will be decremented 1.0 psid every 5 minutes when all of the AHU fan system CHW control valves are less than 75% open.
   iii. The CHW system differential pressure setpoint will be limited to a minimum of 12.0 psid and a maximum of 25.0 psid.
   d. The lead and lag pumps will alternate on a weekly basis to equalize runtime on the pumps.

4. Cooling Tower Fans, CT1 & CT2 -
   a. The lead cooling fans will be enabled when either of the two chillers is enabled. The two cooling tower will be disabled when both chillers are disabled and both chillers indicate an "off" condition.
   b. When a cooling tower is enabled -
   i. Its isolation valves will be opened
   ii. Both the tower fan VFDs will be started when the condenser water temperature rises above the condenser water setpoint. The tower fan VFDs will be stopped when the condenser water temperature drops 2 deg F below the condenser water setpoint with the tower fans operating at minimum speed.
   iii. The speed of the tower fans will be modulated in unison to maintain the condenser water temperature at setpoint.
   c. When a cooling tower is disabled -
   i. Its isolation valves will be closed
   ii. The tower fan VFDs will be stopped
   d. The lag CT will be started when either the a lead CT fan fails to run or the lead fans are running at 95% speed or higher for 10 minutes. All fans will run at the same speed. The lag CT will stop when the fan speeds drop below 40%.
   e. The lead and lag CTs will alternate on a weekly basis to equalize runtime on the fans.
   f. The condenser water temperature setpoint will be set to the value of the calculated outside air wetbulb plus an operator defined offset.
   i. The condenser water setpoint will be limited to a minimum of the chilled water return temperature plus 5 deg F.
   ii. The condenser water setpoint will be limited to a maximum of 85 deg F.
   iii. The outside air wetbulb will be calculated every 15 minutes from the measured outside air drybulb temperature and the measured outside air relative humidity.

5. Condenser Water Pumps, CWP1, CWP2 -
   a. The lead CDW pump will be started when one chiller CDW isolation valve is commanded open and at least one pair of cooling tower isolation valves are commanded open. The lag CDW pump will be started when the second chiller CDW isolation valve is commanded open. The lag CDW pump will be stopped when the second chiller CDW isolation valve is commanded closed. The lead CDW pumps will stop when both chiller CDW isolation valves are commanded closed or both sets of cooling tower isolation valves are commanded closed.
   b. The lead and lag pumps will alternate on a weekly basis to equalize runtime on the pumps.

6. Pump and CHW System Alarms:
   a. Pump not in @AUTO4
   b. Pump on/off status does not match pump on/off command 30 seconds after pump command is issued
   c. Pump VFD alarm reported by VFD
   d. System differential pressure exceeds user defined low limit setpoint or high limit setpoint when the large CHW system is enabled. This alarm will be disabled for the first 15 minutes the large CHW system is enabled.
   e. Chilled water system supply temperature exceeds user defined low limit setpoint or high limit setpoint.
   f. Condenser water system supply temperature exceeds user defined low limit setpoint or high limit setpoint.
   g. Chiller alarms as reported by the chillers
   h. VFD alarms as reported by the VFD. In the case of the cooling tower fans this will also report the vibration switch has activated.

HEATING HOT WATER SYSTEM SEQUENCE OF OPERATION

1. The HHW system will be enabled when any AHU fan system is running is running. The HHW system will be disabled when all AHU fan systems are off.

2. When the HHW system is enabled -
   a. The lead HHW pump will run continuously.
   b. The lag HHW pump will be started when either the lead HHW pump fails to run or the lead pump runs is running at above 90% for 5 minutes.
   i. When both pumps are running they shall run at the same speed to maintain the differential pressure setpoint.
   ii. When both pumps are running below 40% for more than 5 minutes, disable the lag pump and return to single pump operation.
   c. The speed of the HHW pumps will be modulated to maintain the HHW differential pressure at setpoint.
   i. The HHW system differential pressure setpoint will be incremented 1.0 psid every 1 minute when any HHW control valve is open more than 95%.
   ii. The HHW system differential pressure setpoint will be decremented 1.0 psid every 5 minutes when all HHW control valves are less than 75% open.
   iii. The HHW system differential pressure setpoint will be limited to a minimum of 12.0 psid and a maximum of 20.0 psid.
   iv. The HHW system bypass valve will be used as a safety to relieve any differential pressure. If the differential pressure rises 5 psid above setpoint, modulate the valve open to maintain a differential setpoint 5psi above the pump setpoint.
   d. The lead boiler will be enabled continuously.
   e. The lag 1 boiler will be enabled when the lead boiler is unable to meet the HHW temperature setpoint for 5 minutes (disabled for the first 30 minutes of operation).
   f. The lag 2 boiler will be enabled when the lead boiler and the lag 1 boiler are unable to meet the HHW temperature setpoint for 5 minutes (disabled for the first 30 minutes of operation).
   g. The lag 2 boiler will turn off after the HHW setpoint has been maintained for 15 minutes and no heating hot water valve is more than 40% open.
   h. The lag 1 boiler will turn off after the HHW setpoint has been maintained for 15 minutes and no heating hot water valve is more than 80% open.
   i. The boilers will be given a leaving temperature setpoint as defined below.
   i. The leaving water setpoint will be incremented 1.0°F every 5 minutes when any HHW control valve is open more than 95%.
   ii. The leaving water setpoint will be decremented 1.0°F every 10 minutes when all of the HHW control valves are less than 75% open.
   iii. The boiler leaving water temperature setpoint will be limited to a minimum of 100°F and a maximum of 160°F.

3. HHW System Alarms:
   a. Pump not in @AUTO4
   b. Pump on/off status does not match pump on/off command 30 seconds after pump command is issued
   c. Pump VFD alarm reported by VFD
   d. System differential pressure exceeds user defined low limit setpoint or high limit setpoint when the HHW system is enabled. This alarm will be disabled when for the first 15 minutes the HHW system is enabled.
   e. System supply temperature exceeds user defined low limit setpoint or high limit setpoint. This alarm will be disabled when for the first 30 minutes the HHW system is enabled.

TURPIN & RATTAN ENGINEERING, INC.
CONSULTING ENGINEERS
4719 PALM AVENUE
LA MESA, CA 91941-5321
619 / 466 / 5224 FAX 466 / 6233
E-MAIL: ENGINEER@TREBO.COM

TREI PROJECT # 16432.S01

PREPARED FOR THE
GROSSMONT UNION HIGH SCHOOL DISTRICT
P.O.BOX 1043
LA MESA, CALIFORNIA

PREPARED BY
PLATT/WHITELAW ARCHITECTS, INC.
4094 60TH STREET
SAN DIEGO, CA (619)546-4326 FAX (619)546-4350

IDENTIFICATION STAMP
DIV. OF THE STATE ARCHITECT
OFFICE OF REGULATION SERVICES
04-115930
FILE #21-44
C. TB
DATE 042717

4/18/17

MECHANICAL CONTROLS

CENTRAL PLANT EQUIPMENT UPGRADE

VALHALLA HIGH SCHOOL
1725 HILLSDALE ROAD
EL CAJON, CA 92019

REVISION	DATE

PROJECT NO. FMA #056130

FILE NAME:

DATE: 4/4/2017 DRAWN: EL/PS CHECKED: GR/MR

M-602

SHEET NO. - OF SHEETS

J:\16\16432.S01 - GUHSD Valhalla HS Central Plant Upgrade\16432.10\Acadmp\16432.10_M-602_MECHANICAL CONTROLS.dwg 04/18/2017 18:12

KEYNOTE

M16 EXISTING CHW/R AND HHW/R PIPING. PROVIDE DIFFERENTIAL PRESSURE SENSORS IN PIPING SUB-HANG. FIELD VERIFY EXACT LOCATION.

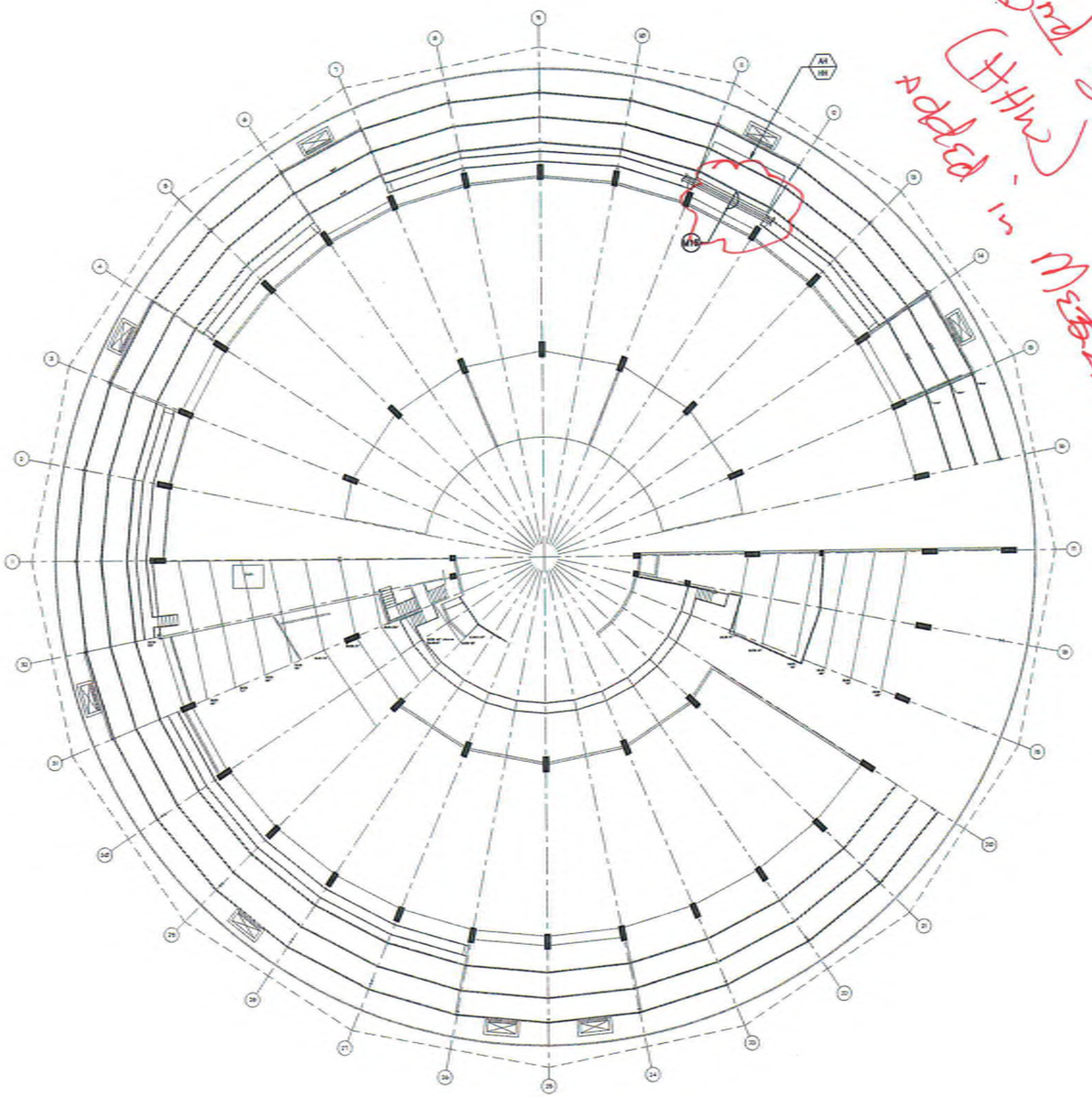

CLASSROOM BUILDING LEVEL 400 MEZZANINE OVERALL PLAN

NO SCALE

1
M-603

TURPIN & RATTAN ENGINEERING, INC.
CONSULTING ENGINEERS
4715 PALM AVENUE
LA MESA, CA 91941-5221
619 / 466 / 6224 FAX 466 / 6233
E-MAIL: ENGINEER@TREGO.COM

TRE: PROJECT # 16432.S01

PREPARED FOR THE
GROSSMONT UNION HIGH SCHOOL DISTRICT
P.O.BOX 1043
LA MESA, CALIFORNIA

PREPARED BY
PLATT/WHITELAW ARCHITECTS, INC.
4034 60TH STREET
SAN DIEGO, CA (619)549-4350 FAX (619)546-4350

DIVISION OF THE STATE ARCHITECT
OFFICE OF REGULATION SERVICES
04-115900
FILE #0744
AC. DJ
DATE 04/27/17

REGISTERED PROFESSIONAL ENGINEER
NO. M3847
EXP. 06/30/18
4/18/17

REGISTERED ARCHITECT
4/18/17

MECHANICAL CONTROLS

CENTRAL PLANT EQUIPMENT UPGRADE

VALHALLA HIGH SCHOOL
1725 HILLSDALE ROAD
EL CAJON, CA 92019

REVISION	DATE

PROJECT NO. FWA #0561.10

FILE NAME:

DATE: 4/14/2017 DRAWN: EL/PS CHECKED: CR/MR

M-603

SHEET NO. 1 OF SHEETS

J:\16\16432.S01 - GMSD Valhalla HS Central Plant Upgrade\16432.S01-Kosberg\16432-SL-M-603_MECHANICAL CONTROLS.dwg 04/18/2017 18:12

RFI # 14
ok to use 5' of carbon steel pipe spec to install instrument tap (@ chiller)

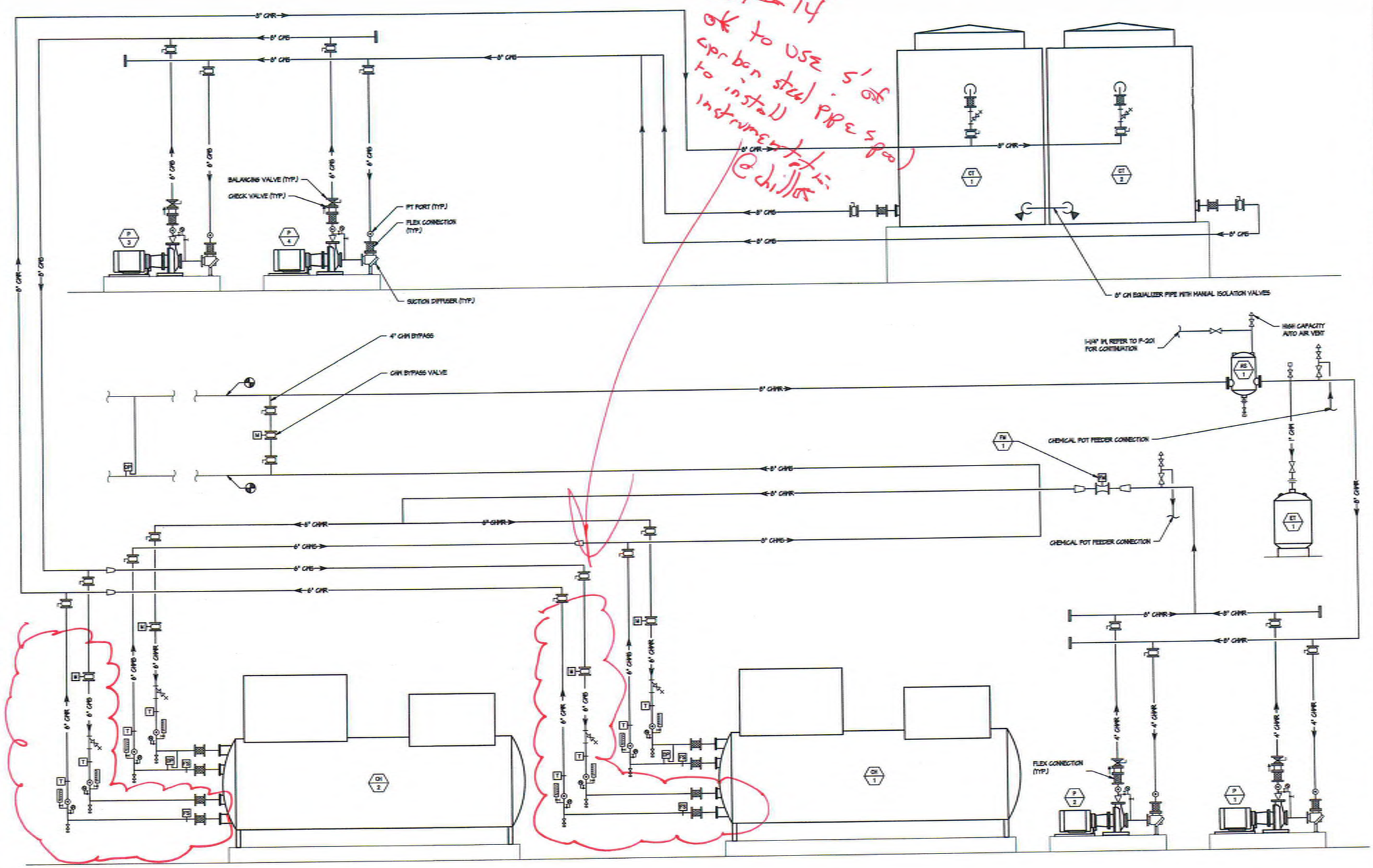

CHILLED WATER AND CONDENSER WATER FLOW DIAGRAM

NO SCALE

1 / M-701

TURPIN & RATTAN ENGINEERING, INC.
CONSULTING ENGINEERS
4719 PALM AVENUE
LA MESA, CA 91941-5221
619 / 466 / 6224 FAX 466 / 6233
E-MAIL: ENGINEER@TREIEG.COM

TREI PROJECT # 16432.S01

PREPARED FOR THE
GROSSMONT UNION HIGH SCHOOL DISTRICT
P.O.BOX 1043
LA MESA, CALIFORNIA

PREPARED BY
PLATT/WHITELAW ARCHITECTS, INC.
4034 30TH STREET
SAN DIEGO, CA (619)546-4520 FAX (619)546-4550

CERTIFICATION STAMP
DIV. OF STATE ARCHITECT
OFFICE OF REGULATION SERVICES
04-115900
FILE #57-H1
A.C. ____ I.D. 042717
DATE ____

4/18/17

MECHANICAL PIPING DIAGRAMS
CENTRAL PLANT EQUIPMENT UPGRADE
VALHALLA HIGH SCHOOL
1725 HILLSDALE ROAD
EL CAJON, CA 92019

REVISION	DATE

PROJECT NO. FMA #056L10

FILE NAME:

DATE: 4/14/2017 DRAWN: EL/PS CHECKED: CR/MR

M-701

SHEET NO. 1 OF SHEETS

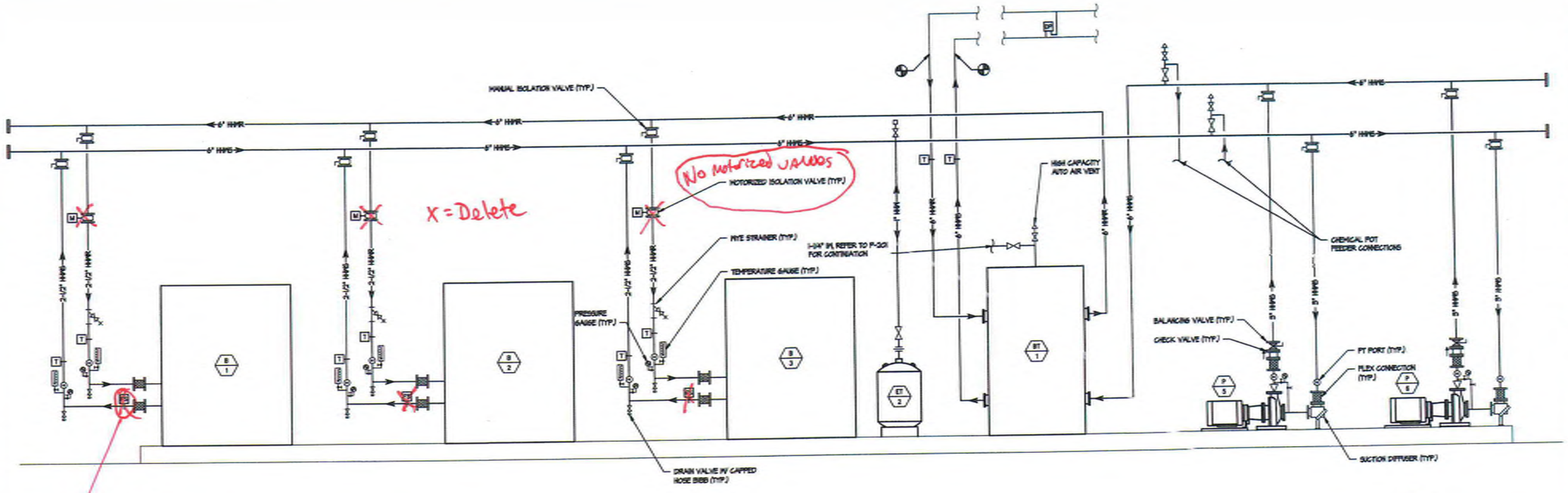

No Flow switch they are interlock

HEATING HOT WATER FLOW DIAGRAM

NO SCALE

1
M-702

See RFI # 30 for sensor modification

TURPIN & RATTAN ENGINEERING, INC.
CONSULTING ENGINEERS
4719 PALM AVENUE
LA MESA, CA 91941-5221
619 / 466 / 6224 FAX 466 / 6233
E-MAIL: ENGINEER@TREISD.COM

TREI PROJECT # 16432.S01

PREPARED FOR THE
GROSSMONT UNION HIGH SCHOOL DISTRICT
P.O.BOX 1048
LA MESA, CALIFORNIA

PREPARED BY
PLATT/WHITELAW ARCHITECTS, INC.
4094 30TH STREET
SAN DIEGO, CA (619)546-4920 FAX (619)546-4950

DSA-SS/CC STAMP
DIV. OF STATE ARCHITECT
OFFICE OF REGULATION SERVICES
04-115930
FILE 101-16
AC.
DATE
FD. 042717

4/18/17

MECHANICAL PIPING DIAGRAMS
CENTRAL PLANT EQUIPMENT UPGRADE
VALHALLA HIGH SCHOOL
1725 HILLSDALE ROAD
EL CAJON, CA 92019

REVISION	DATE

PROJECT NO. PWA #0561.10

FILE NAME:

DATE: 4/14/2017 DRAWN: EL/PS CHECKED: GR/MR

M-702

SHEET NO. OF SHEETS

STATE OF CALIFORNIA
MECHANICAL SYSTEMS
CEC-MECH-MCH-E (Revised 2/15)
CALIFORNIA ENERGY COMMISSION
NRCC-MCH-01-E
CERTIFICATE OF COMPLIANCE
Page 1 of 4
Mechanical Systems
Project Name: Valhalla HS Central Plant Equipment Upgrade | Date Prepared: 1/10/2017

A. MECHANICAL COMPLIANCE DOCUMENTS & WORKSHEETS (check box if worksheet is included)

For detailed instructions on the use of this and all Energy Efficiency Standards compliance forms, refer to the 2016 Nonresidential Manual

Note: The Enforcement Agency may require all forms to be incorporated onto the building plans.

YES	NO	Comp. Doc./Worksheet #	Title
☒	☐	NRCC-MCH-01-E (Part 1 of 3)	Certificate of Compliance, Declaration. Required on plans for all submittals.
☒	☐	NRCC-MCH-02-E (Part 1 of 3)	Certificate of Compliance, Required Acceptance Tests (MCH-02-A to 13-A). Required on plans where applicable.
☒	☐	NRCC-MCH-03-E (Part 1 of 3)	Certificate of Compliance, Required Acceptance Tests (MCH-14-A to 18-A). Required on plans where applicable.
☐	☒	NRCC-MCH-02-E (Part 1 of 3)	Mechanical Dry Equipment Summary is required for all submittals with Central Air Systems. It is optional on plans.
☒	☐	NRCC-MCH-03-E (Part 1 of 3)	Mechanical Wet Equipment Summary is required for all submittals with chilled water, hot water or condenser water systems. It is optional on plans.
☐	☒	NRCC-MCH-04-E	Mechanical Ventilation and Relief is required for all submittals with multiple zone heating and cooling systems. It is optional on plans.
☐	☒	NRCC-MCH-05-E (Part 1 of 3)	Power Consumption of fans. Required on plans where applicable
☐	☒	NRCC-MCH-06-E (Part 1 of 3)	Power Consumption of fans, Declaration. Required on plans where applicable

CA Building Energy Efficiency Standards - 2016 Nonresidential Compliance — January 2016

STATE OF CALIFORNIA
MECHANICAL SYSTEMS
CEC-MECH-MCH-E (Revised 2/15)
CALIFORNIA ENERGY COMMISSION
NRCC-MCH-01-E
CERTIFICATE OF COMPLIANCE
Page 2 of 4
Mechanical Systems
Project Name: Valhalla HS Central Plant Equipment Upgrade | Date Prepared: 1/10/2017

B. MECHANICAL HVAC ACCEPTANCE FORMS (check box for required compliance documents)

Test Performed By:

Designer:
This compliance document is to be used by the designer and attached to the plans. Listed below are all the acceptance tests for HVAC systems. The designer is required to check the applicable boxes for all acceptance tests that apply and list all equipment that requires an acceptance test. All equipment of the same type that requires a test, list the equipment description and the number of systems.

Installing Contractor:
The contractor who installed the equipment is responsible to either conduct the acceptance test themselves or have a qualified entity run the test for them. If more than one person has responsibility for the acceptance testing, each person shall sign and submit the Certificate of Acceptance applicable to the portion of the construction or installation for which they are responsible.

Enforcement Agency:
Plancheck - The NRCC-MCH-01-E compliance document is not considered a completed document and is not to be accepted by the building department unless the correct boxes are checked.
Inspector - Before occupancy permit is granted all newly installed pressure systems must be tested to ensure proper operations.

Test Description		MCH-02-A	MCH-03-A	MCH-04-A	MCH-05-A	MCH-06-A	MCH-07-A	MCH-08-A	MCH-09-A	MCH-10-A	MCH-11-A
Equipment Requiring Testing or Verification	# of Units	Outdoor Air	Single Zone Unitary	Air Distribution Ducts	Economizer Controls	Demand Controlled Ventilation (DCV)	Supply Fan Vfd	Valve Leakage Test	Supply Water Temp. Reset	Hydronic System Variable Flow Control	Automatic Demand Shed Control
Carrier 20XRV	2	☐	☐	☐	☐	☐	☐	☒	☒	☒	☐
BAC PTD-0813-2N3	2	☐	☐	☐	☐	☐	☐	☒	☐	☐	☐
Raypak 205A	2	☐	☐	☐	☐	☐	☐	☒	☒	☒	☐

Add Row | Remove Last

CA Building Energy Efficiency Standards - 2016 Nonresidential Compliance — January 2016

STATE OF CALIFORNIA
MECHANICAL SYSTEMS
CEC-MECH-MCH-E (Revised 2/15)
CALIFORNIA ENERGY COMMISSION
NRCC-MCH-01-E
CERTIFICATE OF COMPLIANCE
Page 3 of 4
Mechanical Systems
Project Name: Valhalla HS Central Plant Equipment Upgrade | Date Prepared: 1/10/2017

C. MECHANICAL HVAC ACCEPTANCE FORMS (check box for required compliance documents)

Test Performed By:

Designer:
This compliance document is to be used by the designer and attached to the plans. Listed below are all the acceptance tests for HVAC systems. The designer is required to check the applicable boxes for all acceptance tests that apply and list all equipment that requires an acceptance test. All equipment of the same type that requires a test, list the equipment description and the number of systems.

Installing Contractor:
The contractor who installed the equipment is responsible to either conduct the acceptance test themselves or have a qualified entity run the test for them. If more than one person has responsibility for the acceptance testing, each person shall sign and submit the Certificate of Acceptance applicable to the portion of the construction or installation for which they are responsible.

Enforcement Agency:
Plancheck - The NRCC-MCH-01-E compliance document is not considered a completed document and is not to be accepted by the building department unless the correct boxes are checked.
Inspector - Before occupancy permit is granted all newly installed pressure systems must be tested to ensure proper operations.

Test Description		MCH-12-A	MCH-13-A	MCH-14-A	MCH-15-A	MCH-16-A	MCH-17-A	MCH-18-A
Equipment Requiring Testing or Verification	# of Units	Fault Detection & Diagnostics for DX Units	Automatic Fault Detection & Diagnostics for Air & Zone	Distributed Energy Storage DX AC Systems	Thermal Energy Storage (TES) Systems	Supply Air Temperature Reset Controls	Condenser Water Reset Controls	ECMS
Carrier 20XRV	2	☐	☐	☐	☐	☐	☐	☒
BAC PTD-0813-2N3	2	☐	☐	☐	☐	☐	☒	☒
Raypak 205A	2	☐	☐	☐	☐	☐	☐	☒

Add Row | Remove Last

CA Building Energy Efficiency Standards - 2016 Nonresidential Compliance — January 2016

STATE OF CALIFORNIA
MECHANICAL SYSTEMS
CEC-MECH-MCH-E (Revised 2/15)
CALIFORNIA ENERGY COMMISSION
NRCC-MCH-01-E
CERTIFICATE OF COMPLIANCE
Page 4 of 4
Mechanical Systems
Project Name: Valhalla HS Central Plant Equipment Upgrade | Date Prepared: 1/10/2017

DOCUMENTATION AUTHOR'S DECLARATION STATEMENT

I, I certify that the Certificate of Compliance documentation is accurate and complete.

Documentation Author Name: Chris Hammett	Documentation Author Signature:
Company: Turpin & Rattan Engineering, Inc.	Signature Date: 1/10/2017
Address: 4719 Palm Ave.	CEA/HERS Certification Identification (if applicable):
City/State/Zip: La Mesa, CA 91941	Phone: 619-466-6224

RESPONSIBLE PERSON'S DECLARATION STATEMENT

I certify the following under penalty of perjury, under the laws of the State of California:
1. The information provided on this Certificate of Compliance is true and correct.
2. I am eligible under Division 3 of the Business and Professions Code to accept responsibility for the building design or system design identified on this Certificate of Compliance (responsible designer).
3. The energy features and performance specifications, materials, components, and manufactured devices for the building design or system design identified on this Certificate of Compliance conform to the requirements of Title 24, Part 1 and Part 6 of the California Code of Regulations.
4. The building design features or system design features identified on this Certificate of Compliance are consistent with the information provided on other applicable compliance documents, worksheets, calculations, plans and specifications submitted to the enforcement agency for approval with this building permit application.
5. I will ensure that a completed signed copy of this Certificate of Compliance shall be made available with the building permit(s) issued for the building, and made available to the enforcement agency for all applicable inspections. I understand that a completed signed copy of this Certificate of Compliance is required to be included with the documentation the builder provides to the building owner at occupancy.

Responsible Designer Name: Cesar Rodriguez, PE	Responsible Designer Signature:
Company: Turpin & Rattan Engineering, Inc.	Date Signed: 1/10/2017
Address: 4719 Palm Ave.	License: M35447
City/State/Zip: La Mesa, CA 91941	Phone: 619-466-6224

CA Building Energy Efficiency Standards - 2016 Nonresidential Compliance — January 2016

STATE OF CALIFORNIA
HVAC DRY & WET SYSTEM REQUIREMENTS
CEC-MECH-MCH-E (Revised 2/15)
CALIFORNIA ENERGY COMMISSION
NRCC-MCH-02-E
CERTIFICATE OF COMPLIANCE
(Page 1 of 3)
HVAC Dry System Requirements
Project Name: Valhalla HS Central Plant Equipment Upgrade | Date Prepared: 1/10/2017

A. Equipment Tags and System Description[1]- Dry Systems

MANDATORY MEASURES	7-24 Sections	Reference to the Requirements in the Contract Documents[2]		
Heating Equipment Efficiency[3]	110.1 or 110.2(a)			
Cooling Equipment Efficiency[3]	110.1 or 110.2(b)			
HVAC or Heat Pump Thermostats	110.2(d); 110.2(h)			
Furnace Standby Loss Control	110.2(d)			
Low Leakage AHUs	110.2(h)			
Ventilation[4]	110.1(b)			
Demand Control Ventilation[5]	110.1(c)4			
Occupant Sensor Ventilation Control[6]	110.1(c)5; 110.2(j)+(l)			
Shutoff and Reset Controls[7]	110.2(e)			
Outdoor Air and Exhaust Damper Control	110.2(g)			
Isolation Zones	110.2(h)			
Automatic Demand Shed Controls	110.2(i)			
Economizer FDD	120.2(i)			
Duct Insulation	120.4			
PRESCRIPTIVE MEASURES				
Equipment is sized in conformance with SMACNA (a & b)	140.4(a & b)	☐ Yes ☐ No	☐ Yes ☐ No	☐ Yes ☐ No
Supply fan Pressure Control	140.4(c)			
Simultaneous Heat/Cool[8]	140.4(d)			
Economizer	140.4(e)			
Heat and Cool Air Supply Reset	140.4(f)			
Electric Resistance Heating[9]	140.4(g)			
Duct Leakage Sealing and Testing[10]	140.4(l)			

Notes:
2. Provide equipment tags (e.g. AHU 1 to 10) and system description (e.g. Single Duct VAV reheat) as appropriate. Multiple units with common requirements can be grouped together.
3. Provide references to plans (i.e. Drawing Sheet Numbers) and/or specifications (including Section name/number and relevant paragraphs) where each requirement is specified. Enter "N/A" if the requirement is not applicable to this system.
4. The referenced plans and specifications must include all of the following information: equipment tag, equipment nominal capacity, Title 24 minimum efficiency requirements, and actual rated equipment efficiencies. Where multiple efficiency requirements are applicable (e.g. full- and part-load) include all. Where appliance standards apply (110.1), identify where equipment is required to be listed per Title 20 1602 et seq.
5. Identify where the ventilation requirements are documented (in each zonal HVAC system. Include references to both central unit schedules and sequences of operation. If one or more spaces is naturally ventilated identify where this is documented in the plans and specifications. Multiple zone central air systems must also provide a MCH-03-E compliance document.
6. If one or more space has demand controlled ventilation identify where it is specified including the sensor specifications and the sequence of operation.
7. If one or more space has occupant sensor ventilation control identify where it is specified including the sensor specifications and the sequence of operation
8. If the system is DDC identify the sequences for the system start/stop, optimal start, setback (if required) and setup (if required). For all systems identify the specification for the thermostats and time clocks (if applicable).
9. Identify where the heating, cooling and deadband setpoints are scheduled for this system. Include a reference to the specification of the zone controls. Provide a MCH-03-E compliance document.
10. Enter N/A if there is no electric heating. If the system has electric heating indicate which exception to 140.4(g) applies.
11. If duct leakage sealing and testing is required, a MCH-04-A compliance document must be submitted.

CA Building Energy Efficiency Standards - 2016 Nonresidential Compliance — January 2016

STATE OF CALIFORNIA
HVAC DRY & WET SYSTEM REQUIREMENTS
CEC-MECH-MCH-E (Revised 2/15)
CALIFORNIA ENERGY COMMISSION
NRCC-MCH-02-E
CERTIFICATE OF COMPLIANCE
(Page 2 of 3)
HVAC Dry & Wet System Requirements
Project Name: Valhalla HS Central Plant Equipment Upgrade | Date Prepared: 1/10/2017

B. Equipment Tags and System Description[1]- Wet Systems

MANDATORY MEASURES	7-24 Sections	CH-1/CH-2	CT-1/CT-2	P-1/P-2
		Reference to the Requirements in the Contract Documents[2]		
Heating Hot Water Equipment Efficiency[3]	110.1	NA	NA	NA
Cooling Chilled and Condenser Water Equipment Efficiency[3]	110.1, 140.4(l)	NC-HVAC-Form.2KA PG-6-7		NA
Open and Closed Circuit Cooling Towers conductivity or flow-based controls	110.2(e) 1	NA	PROVIDED	NA
Open and Closed Circuit Cooling Towers Maximum Achievable Cycles of Concentration (coc)[4]	110.2(e) 2	NA	PROVIDED	NA
Open and Closed Circuit Cooling Towers Flow Meter with analog output	110.2(e) 3	NA	PROVIDED	NA
Open and Closed Circuit Cooling Towers Overflow Alarm	110.2(e) 4	NA	PROVIDED	NA
Open and Closed Circuit Cooling Towers Efficient Drift Eliminators	110.2(e)5	NA	PROVIDED	NA
Pipe Insulation	120.3	1" thick	NA	1" thick
PRESCRIPTIVE MEASURES				
Cooling Tower Fan Controls	140.4(m); 140.4(m)5	☐ Yes ☒ No	☐ Yes ☒ No	☐ Yes ☒ No
Cooling Tower Flow Controls	140.4(n)1	NA	PROVIDED	NA
Centrifugal Fan Cooling Towers[5]	140.4(n)4	NA	NA	NA
Air-Cooled Chiller Limitation[6]	140.4(j)	NA	NA	NA
Variable Flow System Design	140.4(k)	PROVIDED	NA	PROVIDED
Chiller and Boiler Isolation	140.4(k)	PROVIDED	NA	PROVIDED
CHW and HHW Reset Controls	140.4(k)	PROVIDED	NA	PROVIDED
WSHP Isolation Valves	140.4(k)	NA	NA	NA
VSD on CHW, CW & WSHP Pumps >5HP	140.4(k)	PROVIDED	PROVIDED	PROVIDED
DP Sensor Location	140.4(k)	PROVIDED	NA	PROVIDED

Notes:
2. Provide equipment tags (e.g. CH 1 to 3) or system description (e.g. CHW loop) as appropriate. Multiple units with common requirements can be grouped together.
3. Provide references to plans (i.e. Drawing Sheet Numbers) and/or specification (including Section name/number and relevant paragraphs) where each requirement is specified. Enter "N/A" if the requirement is not applicable to this system.
4. The referenced plans and specifications must include all of the following information: equipment tag, equipment nominal capacity, Title 24 minimum efficiency requirements, and actual rated equipment efficiencies. Where multiple efficiency requirements are applicable (e.g. full- and part-load) include all. For chillers operating at non-standard efficiencies provide the kW/ton values. For chillers also note whether the efficiencies are Path A or Path B.
4. Identify if cooling towers have propeller fans. If towers are centrifugal, then document which exception is used.
5. If air-cooled chillers are used, document which exceptions have been used to comply with 140.4(j) and the total installed design capacity of the air-cooled chillers in the chilled water plant.
6. Identify the existence of a completed MCH-04-A when open or closed circuit cooling towers are specified to be installed, otherwise enter "N/A".

CA Building Energy Efficiency Standards - 2016 Nonresidential Compliance — January 2016

STATE OF CALIFORNIA
HVAC SYSTEM REQUIREMENTS
CEC-MECH-MCH-E (Revised 2/15)
CALIFORNIA ENERGY COMMISSION
NRCC-MCH-02-E
CERTIFICATE OF COMPLIANCE
(Page 3 of 3)
HVAC Wet System Requirements
Project Name: Valhalla HS Central Plant Equipment Upgrade | Date Prepared: 1/10/2017

DOCUMENTATION AUTHOR'S DECLARATION STATEMENT

I, I certify that the Certificate of Compliance documentation is accurate and complete.

Documentation Author Name: Chris Hammett	Documentation Author Signature:
Company: Turpin & Rattan Engineering, Inc.	Signature Date: 1/10/2017
Address: 4719 Palm Ave.	CEA/HERS Certification Identification (if applicable):
City/State/Zip: La Mesa, CA 91941	Phone: 619-466-6224

RESPONSIBLE PERSON'S DECLARATION STATEMENT

I certify the following under penalty of perjury, under the laws of the State of California:
1. The information provided on this Certificate of Compliance is true and correct.
2. I am eligible under Division 3 of the Business and Professions Code to accept responsibility for the building design or system design identified on this Certificate of Compliance (responsible designer).
3. The energy features and performance specifications, materials, components, and manufactured devices for the building design or system design identified on this Certificate of Compliance conform to the requirements of Title 24, Part 1 and Part 6 of the California Code of Regulations.
4. The building design features or system design features identified on this Certificate of Compliance are consistent with the information provided on other applicable compliance documents, worksheets, calculations, plans and specifications submitted to the enforcement agency for approval with this building permit application.
5. I will ensure that a completed signed copy of this Certificate of Compliance shall be made available with the building permit(s) issued for the building, and made available to the enforcement agency for all applicable inspections. I understand that a completed signed copy of this Certificate of Compliance is required to be included with the documentation the builder provides to the building owner at occupancy.

Responsible Designer Name: Cesar Rodriguez, PE	Responsible Designer Signature:
Company: Turpin & Rattan Engineering, Inc.	Date Signed: 1/10/2017
Address: 4719 Palm Ave.	License: M35447
City/State/Zip: La Mesa, CA 91941	Phone: 619-466-6224

CA Building Energy Efficiency Standards - 2016 Nonresidential Compliance — January 2016

TURPIN & RATTAN ENGINEERING, INC.
CONSULTING ENGINEERS
4719 PALM AVENUE
LA MESA, CA 91941-5321
619 / 466 / 6224 FAX 466 / 6233
E-MAIL: ENGINEER@TREBD.COM

TRE: PROJECT # 16432.S01

PREPARED FOR THE
GROSSMONT UNION HIGH SCHOOL DISTRICT
P.O.BOX 1043
LA MESA, CALIFORNIA

PREPARED BY
PLATT/WHITELAW ARCHITECTS, INC.
4084 30TH STREET
SAN DIEGO, CA (619)546-4350 FAX (619)546-4350

DISTRIBUTION STAMP
DIV. OF THE STATE ARCHITECT
OFFICE OF REGULATION SERVICES
04 1150/SO
FILE #2744
AC. 8/8 DD
DATE 02/11

REGISTERED PROFESSIONAL ENGINEER
CESAR RODRIGUEZ
NO. M35447
Exp. 06/30/18
CIVIL STATE OF CALIFORNIA
4/11/17

REGISTERED ARCHITECT
STATE OF CALIFORNIA
NO. 11321

MECHANICAL TITLE-24 DOCUMENTATION
CENTRAL PLANT EQUIPMENT UPGRADE
VALHALLA HIGH SCHOOL
1725 HILLSDALE ROAD
EL CAJON, CA 92019

REVISION	DATE

PROJECT NO. PWA #0861.10
FILE NAME:
DATE: 4/14/2017 DRAWN: EL/PS CHECKED: CR/MR

M-801

SHEET NO. OF SHEETS

J:\16\16432.S01 - GUSD Valhalla HS Central Plant Upgrade\16432.10_M-801_MECHANICAL TITLE-24.dwg 04/18/2017 18:12

PIPING NOTES

PIPING:

1. ALL PIPE SUPPORTS, CLAMPS, HANGERS AND BRACKETS SHALL HAVE INTERNAL NOISE ISOLATORS. PENETRATIONS OF ANY UNRATED FRAMING OR STRUCTURAL MEMBER, INCLUDING BUT NOT LIMITED TO STUDS, JOISTS AND RAFTERS, SHALL HAVE SOUND ISOLATED INSERTION CLAMPS. HUBBARD HOLDRITE SILENCER SYSTEM OR EQUAL.
2. ALL PIPING PENETRATING RATED WALLS OR FLOORS SHALL HAVE FIRESTOPPING ASSEMBLY MATCHING WALL RATING PER DETAIL UM-505. FOR LOCATIONS OF RATED WALLS SEE FLOOR PLAN LEGENDS AND ARCHITECTURAL DRAWINGS.
3. PIPING PENETRATING FOUNDATION WALLS SHALL BE PROVIDED WITH STANDARD WEIGHT GALVANIZED STEEL PIPE SLEEVES TWO PIPE SIZES LARGER THAN PIPE PASSING THRU AND WITH VOID FILLED WITH MANUFACTURED SLEEVE SEAL SYSTEM (METRAFLEX OR EQUAL).
4. ALL PIPING PENETRATING FOUNDATION WALLS & FLOORS OR WHICH WILL COME INTO DIRECT CONTACT WITH CONCRETE SHALL BE PROVIDED WITH POLYETHYLENE PIPE SHIELDING INSTALLED PER THE MANUFACTURER'S RECOMMENDATIONS. NORTHTOWN "POLYWRAP" AND "POLYWRAP-O"OR EQUAL.
5. IN ADDITION TO THE SPECIFICATION REQUIREMENTS FOR SUPPORTS AND THEIR SPACING PROVIDE THE FOLLOWING: HANGERS AND SUPPORTS WITHIN 12" OF EACH ELBOW, TEE AND JOINT FOR ALL PIPING; SUPPORTS WITHIN 12" OF EACH COUPLING FOR 5" AND SMALLER CAST IRON PIPE; SUPPORTS ON BOTH SIDES OF EACH COUPLING FOR 4" AND LARGER CAST IRON PIPE.

MEP COMPONENT ANCHORAGE NOTE

ALL MECHANICAL, PLUMBING, AND ELECTRICAL COMPONENTS SHALL BE ANCHORED AND INSTALLED PER THE DETAILS ON THE DSA APPROVED CONSTRUCTION DOCUMENTS. WHERE NO DETAIL IS INDICATED, THE FOLLOWING COMPONENTS SHALL BE ANCHORED OR BRACED TO MEET THE FORCE AND DISPLACEMENT REQUIREMENTS PRESCRIBED IN THE 2016 CBC, SECTIONS 1616A.1.18 THROUGH 1616A.1.28 AND ASCE 7-10 CHAPTER 13, 26 AND 30.

1. ALL PERMANENT EQUIPMENT AND COMPONENTS.
2. TEMPORARY OR MOVABLE EQUIPMENT THAT IS PERMANENTLY ATTACHED (E.G. HARD WIRED) TO THE BUILDING UTILITY SERVICES SUCH AS ELECTRICITY, GAS OR WATER.
3. MOVABLE EQUIPMENT WHICH IS STATIONED IN ONE PLACE FOR MORE THAN 8 HOURS AND HEAVIER THAN 400 POUNDS ARE REQUIRED TO BE ANCHORED WITH TEMPORARY ATTACHMENTS.

THE FOLLOWING MECHANICAL AND ELECTRICAL COMPONENTS SHALL BE POSITIVELY ATTACHED TO THE STRUCTURE, BUT THE ATTACHMENT NEED NOT BE DETAILED ON THE PLANS. THESE COMPONENTS SHALL HAVE FLEXIBLE CONNECTIONS PROVIDED BETWEEN THE COMPONENT AND ASSOCIATED DUCTWORK, PIPING AND CONDUIT.

A. COMPONENTS WEIGHING LESS THAN 400 POUNDS AND HAVE A CENTER OF MASS LOCATED 4 FEET OR LESS ABOVE THE ADJACENT FLOOR OR ROOF LEVEL THAT DIRECTLY SUPPORT THE COMPONENT.

B. COMPONENTS WEIGHING LESS THAN 20 POUNDS, OR IN THE CASE OF DISTRIBUTED SYSTEMS, LESS THAN 5 POUNDS PER FOOT, WHICH ARE SUSPENDED FROM A ROOF OR FLOOR OR HUNG FROM A WALL.

FOR THOSE ELEMENTS THAT DO NOT REQUIRE DETAILS ON THE APPROVED DRAWINGS, THE INSTALLATION SHALL BE SUBJECT TO THE APPROVAL OF THE DESIGN PROFESSIONAL IN GENERAL RESPONSIBLE CHARGE OR STRUCTURAL ENGINEER DELEGATED RESPONSIBILITY AND THE DSA DISTRICT STRUCTURAL ENGINEER. THE PROJECT INSPECTOR WILL VERIFY THAT ALL COMPONENTS AND EQUIPMENT HAVE BEEN ANCHORED IN ACCORDANCE WITH ABOVE REQUIREMENTS.

PIPING, DUCTWORK, AND ELECTRICAL DISTRIBUTION SYSTEM BRACING NOTE

PIPING, DUCTWORK, AND ELECTRICAL DISTRIBUTION SYSTEMS SHALL BE BRACED TO COMPLY WITH THE FORCES AND DISPLACEMENTS PRESCRIBED IN ASCE 7-10 SECTION 13.3 AS DEFINED IN ASCE 7-10 SECTION 13.6.5.6, 13.6.7, 13.6.8, AND 2015 CBC, SECTIONS 1616A.1.25, 1616A.1.26, 1616A.1.27 AND 1616A.1.28.

THE METHOD OF SHOWING BRACING AND ATTACHMENTS TO THE STRUCTURE FOR IDENTIFIED DISTRIBUTION SYSTEM ARE AS NOTED BELOW. WHEN BRACING AND ATTACHMENTS ARE BASED ON A PRE-APPROVED INSTALLATION GUIDE (E.G., SMACNA OR OSHPOD OPM), COPIES OF THE BRACING SYSTEM INSTALLATION GUIDE OR MANUAL SHALL BE AVAILABLE ON THE JOBSITE PRIOR TO THE START OF AND DURING THE HANGING AND BRACING OF THE DISTRIBUTION SYSTEMS. THE STRUCTURAL ENGINEER OF RECORD SHALL VERIFY THE ADEQUACY OF THE STRUCTURE TO SUPPORT THE HANGER AND BRACE LOADS.

MECHANICAL PIPING (MP), MECHANICAL DUCTS (MD), PLUMBING PIPING (PP), ELECTRICAL DISTRIBUTION SYSTEMS (E):

MP ☐ MD ☐ PP ☐ E ☐ - OPTION 1: DETAILED ON THE APPROVED DRAWINGS WITH PROJECT SPECIFIC NOTES AND DETAILS.

MP ☐ MD ☐ PP ☐ E ☐ - OPTION 2: SHALL COMPLY WITH THE APPLICABLE OSHPOD PRE-APPROVAL (OPM) #_____.

MP ☐ MD ☐ PP ☐ - OPTION 3: SHALL COMPLY WITH SMACNA SEISMIC RESTRAINT MANUAL, OSHPOD EDITION (2005), INCLUDING ANY ADDENDA. FASTENERS AND OTHER ATTACHMENTS NOT SPECIFICALLY IDENTIFIED IN THE SMACNA SEISMIC RESTRAINT MANUAL, OSHPOD EDITION, ARE DETAILED ON THE APPROVED DRAWINGS WITH PROJECT SPECIFIC NOTES AND DETAILS. THE DETAILS SHALL ACCOUNT FOR THE APPLICABLE SEISMIC HAZARD LEVEL _____ AND CONNECTION LEVEL _____ FOR THE PROJECT AND CONDITIONS.

GENERAL NOTES

GENERAL NOTES:

1. ALL WORK OF THIS SECTION SHALL FULLY CONFORM TO THE REQUIREMENTS OF THE 2016 CALIFORNIA PLUMBING CODE (C.P.C.), 2016 CALIFORNIA BUILDING CODE (C.B.C.), 2016 CALIFORNIA MECHANICAL CODE (C.M.C.), CALIFORNIA ADMINISTRATIVE CODE TITLE 24, THE CALIFORNIA GREEN STANDARDS MODEL CODE, THE AMERICAN SOCIETY OF TESTING AND MATERIALS AND APPLICABLE NFPA STANDARDS.
2. SUBSTITUTIONS: BIDDERS WISHING TO OBTAIN APPROVAL OF AN ARTICLE, DEVICE, PRODUCT, MATERIAL, FIXTURE, FORM OR TYPE OF CONSTRUCTION OTHER THAN THOSE SPECIFIED BY NAME, MAKE OR CATALOG NUMBER, SHALL REQUEST WRITTEN APPROVAL FROM THE ARCHITECT NOT LESS THAN TEN (10) DAYS BEFORE THE BID DUE DATE.
3. THE SPECIFICATIONS ARE AN INTEGRAL PART OF THESE DOCUMENTS AND THE REQUIREMENTS THEREIN MUST BE INCLUDED IN THE INTERPRETATION OF THE DRAWINGS AND IMPLEMENTATION OF WORK.
4. AREA SEPARATION WALLS: WHERE PLUMBING PENETRATES THE AREA SEPARATION WALL SURFACE, THE SECTION PASSING THROUGH THE WALL SURFACE AND THE FIXTURE CONNECTIONS ATTACHED THERETO, SHALL BE ONLY OF METAL.

UTILITY NOTES:

1. CONTRACTOR SHALL VERIFY ALL POINT OF CONNECTIONS PRIOR TO INSTALLATION OF ANY PIPING.
2. LOCATIONS AND DEPTHS OF EXISTING UNDERGROUND UTILITIES AND OTHER UNDERGROUND OBSTRUCTIONS AND CONDITIONS ARE GENERALLY UNKNOWN AND IF SHOWN ARE AT APPROXIMATE LOCATIONS. CONTRACTOR SHALL HIRE A UTILITY LOCATING SERVICE TO LOCATE ALL EXISTING PLUMBING AND OTHER UNDERGROUND UTILITIES PRIOR TO DIGGING. VERIFY EXACT LOCATION SIZE AND EXTENT OF ALL OBSTRUCTIONS AND OTHER CONDITIONS WHICH MAY AFFECT THE PROPOSED WORK UNDER THE PROJECT. TAKE EVERY PRECAUTION TO PREVENT DAMAGE TO EXISTING WORK, INCLUDING HAND DIGGING AROUND EXISTING UTILITIES, TREE ROOT SYSTEMS, AND HARDSCAPE FEATURES. ANY DAMAGE TO EXISTING UTILITIES OR STRUCTURES SHALL BE IMMEDIATELY REPAIRED OR REPLACED IN ACCORDANCE WITH THE CLIENT'S DIRECTION AT THE CONTRACTOR'S EXPENSE.
3. CONTRACTOR SHALL EXERCISE EXTREME CARE TO AVOID DAMAGE IN EXPOSING UNDERGROUND SERVICES. IN ADDITION TO WHAT IS NOTED ABOVE, THE CONTRACTOR SHOULD REQUEST THAT UTILITY AGENCIES LOCATE AND MARK ANY UNDERGROUND PIPING OR CABLES THAT MAY BE IN THE AREA OF WORK. WHERE AN UNDERGROUND FACILITY IS ENCOUNTERED WHICH IS NOT SHOWN ON THE PLANS OR MENTIONED IN ANY OTHER CONTRACT DOCUMENT, THE CONTRACTOR SHALL DISCONTINUE THE EXCAVATION AND IMMEDIATELY CALL THE ARCHITECT FOR INSPECTION.
4. PRIOR TO INSTALLATION OF ANY SEWER AND STORM DRAIN LINES, THE CONTRACTOR SHALL PHYSICALLY VERIFY THE ELEVATION, SIZE AND MATERIAL AT THE POINT OF CONNECTION. IF THE ACTUAL ELEVATION IS HIGHER THAN INDICATED AND THE BUILDING SEWER OR DRAIN CANNOT BE INSTALLED AS SHOWN, THE CONTRACTOR SHALL NOT PROCEED WITH THE CONSTRUCTION OF SAID LINES AND SHALL IMMEDIATELY INFORM THE ARCHITECT.

INTERRUPTION OF SERVICES AND DEMOLITION NOTES:

1. DEMOLITION, CAPPING AND REROUTING SHALL BE PERFORMED AS SHOWN TO ACCOMMODATE NEW CONSTRUCTION.
2. EXISTING SERVICES REQUIRED TO STAY IN OPERATION IN AREAS NOT REMODELED SHALL BE MAINTAINED, REROUTED OR OTHERWISE PROVIDED WITH TEMPORARY CONNECTIONS TO PREVENT INTERRUPTIONS.
3. IF IMPOSSIBLE TO PREVENT INTERRUPTIONS, CONNECTIONS SHALL BE PERFORMED DURING "OFF-HOURS" AND COORDINATED WITH THE OWNER'S REPRESENTATIVE.
4. PROVIDE A MINIMUM OF SEVEN (7) DAYS WRITTEN ADVANCE NOTICE OF INTERRUPTION. DO NOT INTERRUPT SERVICES WITHOUT WRITTEN CONSENT OF THE OWNER.

FIXTURES:

1. ALL FIXTURES SHALL BE NEW, APPROVED, FREE FROM FLAWS AND BLEMISHES WITH CLEAR AND CLEAN FINISHED SURFACES.
2. ALL PLUMBING FIXTURES SHOWN ON DRAWINGS AND AS LISTED ON THE DRAWING FIXTURE SCHEDULE SHALL BE FURNISHED AND INSTALLED IN ACCORDANCE WITH MANUFACTURER'S INSTRUCTIONS. FIXTURES AND TRIM SHALL BE PROPERLY ANCHORED AND CAULKED ALONG ALL JOINTS.
3. HOSE BIBBS:
   PERMANENT VACUUM BREAKERS SHALL BE INCLUDED WITH ALL HOSE BIBBS.
4. FLOOR DRAINS SHALL HAVE 1/2" MAX. GRATE OPENINGS IN ALL DIRECTIONS OF TRAVEL.

TESTS AND ADJUSTMENTS:

1. THE NEW PLUMBING PIPING SHALL BE FLUSHED AND THEN TESTED PER LOCAL CODE REQUIREMENTS AND ALL DEFECTS CORRECTED WITH NEW MATERIALS.
2. ALL NEW DOMESTIC WATER PIPING SHALL BE FLUSHED OUT, TESTED AT 150 PSIG AND SHALL BE LEFT UNDER PRESSURE OF SUPPLY MAIN OR A MINIMUM OF 50 PSIG FOR THE REMAINDER OF THE CONSTRUCTION PERIOD. NO AIR TESTING IS ALLOWED. TESTS ARE TO BE APPLIED FOR A MINIMUM PERIOD OF ONE HOUR AND UNTIL TESTS ARE COMPLETE. FINAL PRESSURES AT THE END OF THE TEST PERIOD SHALL BE NOT MORE NOR LESS THAN THAT CAUSED BY EXPANSION OR CONTRACTION OF THE TEST MEDIUM DUE TO TEMPERATURE CHANGES. PROVIDE ADDITIONAL VALVES AS REQUIRED IN THE CONNECTIONS OF NEW PIPING TO EXISTING TO FACILITATE TESTING.
3. PLUMBING FIXTURES SHALL BE FILLED WITH WATER AND CHECKED FOR LEAKS AND RETARDED DRAINAGE FLOW.
4. SOIL, WASTE, VENT AND CONDENSATE PIPING SHALL BE TESTED WITH A MINIMUM OF 10 FOOT OF HEAD AT EACH JOINT FOR A MINIMUM OF THREE HOURS WITH NO LOSS IN HEAD.
5. ALL NEW AND EXISTING GAS PIPING SHALL BE TESTED. PIPING CARRYING GAS AT PRESSURE LESS THAN 14 INCH WATER COLUMN SHALL BE TESTED AT NOT LESS THAN 3 PSI FOR A PERIOD OF ONE HOUR MINIMUM WITH NO LOSS IN PRESSURE. PIPING CARRYING GAS AT PRESSURE MORE THAN 14 INCH WATER COLUMN SHALL BE TESTED AT 60 PSI FOR A PERIOD OF ONE HOUR MINIMUM WITH NO LOSS IN PRESSURE. FOLLOWING PRESSURE TEST THE PIPE SYSTEM SHALL BE PURGED WITH INERT GAS PER 2016 C.P.C. 1215.6.

PLUMBING LEGEND

SYMBOL	ABBR.	DESCRIPTION
	POC	POINT OF CONNECTION
	EX	DENOTES EXISTING (SHOWN LIGHT)
	R	REMOVE EXISTING EQUIPMENT OR PIPING
	W OR S	WASTE OR SOIL PIPING ABOVE GRADE
	W OR S	WASTE OR SOIL PIPING BELOW GRADE
	V	SANITARY VENT PIPING
	W	INDIRECT WASTE PIPING
	SD	STORM DRAIN PIPING ABOVE GRADE OR FLOOR
	SD	STORM DRAIN PIPING BELOW GRADE OR FLOOR
	OSD	OVERFLOW STORM DRAIN PIPING
	CD	CONDENSATE DRAIN PIPING (AIR CONDITIONING)
	CW	COLD WATER PIPING
	HW	HOT WATER PIPING
	HWR	HOT WATER RETURN PIPING
	TP	TRAP PRIMER LINE PIPING
	G	GAS PIPING (0" W.C. TO 14" W.C.)
	MPG	MEDIUM PRESSURE GAS PIPING (5" W.C. TO 5 PSI)
	GV	GATE VALVE
	BLV	BALANCING VALVE
	BV	BALL VALVE
	GC	GAS COCK
	PRV	PRESSURE REDUCING VALVE
	GPR	GAS PRESSURE REGULATOR
	CV/BWV	CHECK VALVE/BACKWATER VALVE
	RPBP	REDUCED PRESSURE BACKFLOW PREVENTER
	PVTRV	PRESSURE & TEMPERATURE RELIEF VALVE
	FD	FLOOR DRAIN
	FS	FLOOR SINK
	GCO	GRADE CLEANOUT IN YARD BOX
	FCO	FLOOR CLEANOUT
	WCO	WALL CLEANOUT
	HB	HOSE BIBB
	TP	TRAP PRIMER
	TH	THERMOMETER
	WHA 'X'	WATER HAMMER ARRESTER (PSI SIZE)
	U	UNION
		CAPPED PIPE END (DRIP LEG)
	DN	PIPE TURNING DOWN
	UP	PIPE TURNING UP
		VALVE ON RISE OR DROP
	WM	WATER METER
	VTR	VENT THRU ROOF
	AP	ACCESS PANEL
	B/G	BELOW GRADE
	CFH	CUBIC FEET PER HOUR
	DFU	DRAINAGE FIXTURE UNITS
	ET	EXPANSION TANK
	FF	FINISHED FLOOR
	FPS	FEET PER SECOND
	GPM	GALLONS PER MINUTE
	IE	INVERT ELEVATION
	N.C.	NORMALLY CLOSED
	TYP	TYPICAL
	VTR	VENT THRU ROOF
	V/PH/Hz	VOLTS/PHASE/HERTZ

TURPIN & RATTAN ENGINEERING, INC.
CONSULTING ENGINEERS
4519 PALM AVENUE
LA MESA, CA 91941-5221
619 / 466 / 6224 FAX 466 / 6233
E-MAIL: ENGINEER@TRI360.COM

TRI PROJECT # 16432.S01

PREPARED FOR THE
GROSSMONT UNION HIGH SCHOOL DISTRICT
P.O.BOX 1043
LA MESA, CALIFORNIA

PREPARED BY
PLATT/WHITELAW ARCHITECTS, INC.
4094 30TH STREET
SAN DIEGO, CA (619)546-4920 FAX (619)546-4990

CERTIFICATION STAMP
DIV. OF THE STATE ARCHITECT
OFFICE OF REGULATION SERVICES
04-119930
FILE 07-114
AC. FLS
DATE 04/27/17

REGISTERED PROFESSIONAL ENGINEER
NO. M3447
Exp. 03/30/18
MECHANICAL
STATE OF CALIFORNIA
4/18/17

REGISTERED ARCHITECT
NO. C-13175
STATE OF CALIFORNIA

PLUMBING LEGEND AND GENERAL NOTES
CENTRAL PLANT EQUIPMENT UPGRADE
VALHALLA HIGH SCHOOL
1725 HILLSDALE ROAD
EL CAJON, CA 92019

REVISION	DATE

PROJECT NO. FMA #056130
FILE NAME:
DATE: 4/14/2017 DRAWN: EL/PS CHECKED: CR/MR
P-001
SHEET NO. 1 OF SHEETS

J:\16\16432.S01 - GUSD Valhalla HS Central Plant Upgrade\16432.S01_P-001_PLUMBING LEGEND AND GENERAL NOTES.dwg 04/18/2017 17:09

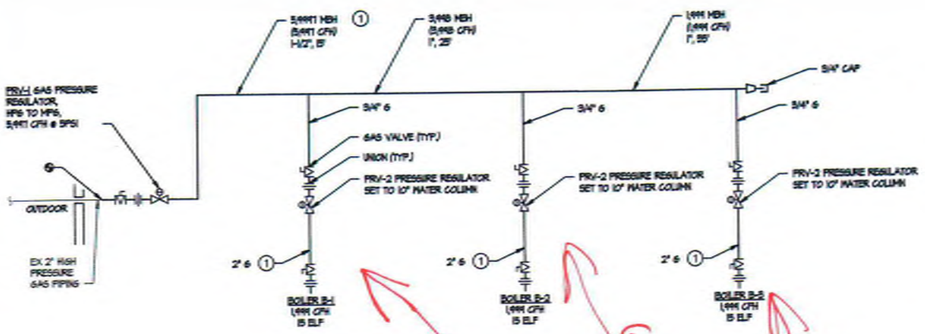

Gas Regulator ~~orifice~~ orifice changed from 1/2" to 9/16" per manufacturer stat up

KEYNOTE

1. SCH. 40 ASTM A53 GRADE A BLACK STEEL PIPING.

NATURAL GAS PIPING RISER DIAGRAM

NO SCALE

GAS CALCULATIONS

DESCRIPTION	QUANTITY	BTUH INPUT EACH	TOTAL BTUH INPUT
EXISTING BOILER DEMOLISHED	1	(1,500,000)	(1,500,000)
(N) BOILER (B-1, B-2, B-3)	3	1,999,000	5,997,000

BTUH INPUT TOTAL	5,997,000
CFH INPUT - (TOTAL BTUH / 1000)	5,997 CFH
TOTAL EQUIVALENT LENGTH OF MP6 (5 PSI) PIPE (LENGTH x1.5)	55' (SEE NOTE 1)
MAIN EXISTING MP6 (5 PSI) LINE SIZE (5,412.1CFH AT 5'S ELF)	2"
TOTAL EQUIVALENT LENGTH OF 14" W.C. GAS PIPE (LENGTH x1.5)	15'
MAIN 14" W.C. GAS PIPE SIZE (1,999 CFH AT 15 ELF)	2"

NOTES:
1. EQUIVALENT LENGTH FROM METER TO MOST DISTANT PRESSURE REGULATOR IN SYSTEM (SERVING BOILER B-3).

ALL LOW PRESSURE GAS PIPING SIZED PER 2016 C.P.C. TABLE 1216.2 (1):
INLET PRESSURE: LESS THAN 2 P.S.I.
PRESSURE DROP: 0.5 IN W.C.
SPECIFIC GRAVITY: 0.60

ALL MEDIUM PRESSURE GAS PIPING SIZED PER 2016 C.P.C. TABLE 1216.2 (6):
INLET PRESSURE: 5 P.S.I.
PRESSURE DROP: 3.5 IN W.C.
SPECIFIC GRAVITY: 0.60

WATER PIPE SIZE TABLE

PIPE SIZE (IN)	COLD WATER (8 FPS MAX VELOCITY)				HOT WATER (8 FPS MAX VELOCITY)		
	GPM	VELOCITY (FPS)	FLUSH TANK FU	FLUSH VALVE FU	GPM	VELOCITY (FPS)	FIXTURE UNITS
1/2	2.5	3.0	5	0	2.5	3.0	3
3/4	6	4.0	7	0	6	4.0	7
1	14	4.8	20	0	14	4.8	20
1-1/4	22	5.6	35	0	14	5.0	28
1-1/2	35	6.2	65	20	28	5.0	47
2	75	8.0	250	150	45	5.0	120
2-1/2	125	4.0	500	340	70	5.0	285
3	150	5.0	810	780	120	5.0	480
4	240	5.0	1600	1600	190	5.0	872

FIXTURE SCHEDULE

ITEM	FIXTURE	ROUGH-IN CONNECTIONS: TRAP	WASTE	VENT	COLD WATER	HOT WATER	
HB-1	HOSE BIBB	-	-	-	3/4"	-	HOSE BIBB: ACORN 802-CP POLISHED CHROME FINISH, REPLACABLE DISC, HOSE THREAD SPOUT, WITH A666 101 BACKFLOW PREVENTOR OUTLET IN 3/4" SIZE.
FS-1	FLOOR SINK	-	2"	-	-	-	FLOOR SINK: SURN FLOOR SINK MODEL ZM80-6, 8" OPENING, 6" DEEP CAST IRON, PORCELAIN ENAMEL INTERIOR, ABS ANTI-SPLASH INTERIOR BOTTOM DOME STRAINER, FILL GRATE WITH CENTER OPENING.
FD-1	FLOOR DRAIN	2"	2"	2"	-	-	FLOOR DRAIN: ZURN ZN-415-VP 2" CAST IRON ENAMELED WITH DOUBLE DRAINAGE FLANGE, WEEP HOLES, REVERSIBLE, ADJUSTABLE CLAMPING COLLAR, NICKEL BRONZE STRAINER THREADED COLLAR, BOTTOM OUTLET WITH TRAP PRIMER CONNECTION AND TRAP PRIMER.
ESS-1	EMERGENCY EYEWASH/ SHOWER STATION	-	-	-	1-1/4"	-	EMERGENCY SHOWER: GUARDIAN G1850, BARRIER FREE SAFETY STATION, ADA COMPLIANT SHOWER: 10" DIA. ABS PLASTIC SHOWER HEAD. SHOWER VALVE: 1" CHROME PLATED BRASS STAY OPEN BALL VALVE WITH STAINLESS STEAL ACTUATING ARM AND STAINLESS STEEL PULL ROD. SPRAY HEAD ASSEMBLY: TWO FS-PLUS SPRAY HEADS, EACH HEAD EQUIPPED WITH A "FLIP-TOP" DUST COVER, INTERNAL FLOW CONTROL AND FILTER. EYEFACE BOWL WASH: 11-1/2" DIAMETER ABS PLASTIC EYEFACE WASH VALVE: 1/2" IPS CHROME PLATED BRASS STAY-OPEN BALL VALVE WITH FLAG HANDLE. PIPE & FITTINGS: SCHEDULE 40 GALVANIZED STEEL WITH ORANGE POLYETHYLENE COVERS ON PIPING. SUPPLY: 1-1/4" NPT FEMALE TOP AND SIDE INLET. WASTE: 1-1/4" NPT FEMALE OUTLET. SIGN: ANSI COMPLIANT IDENTIFICATION SIGN

EQUIPMENT SCHEDULE

ITEM	FIXTURE	REMARKS
PRV-1	PRESSURE REDUCING VALVE	GAS PRESSURE REDUCING VALVE BY ELSTER AMERICAN METER, MODEL 1800B2 2" SERIES 1800, FACTORY SET AT 5.0 PSI, SPRING NO 1-1-2M4003, ORIFICE 5/8", PROVIDE WITH ISOLATION GAS COCK.
PRV-2	PRESSURE REDUCING VALVE	GAS PRESSURE REDUCING VALVE BY ELSTER AMERICAN METER, MODEL 1800B3 5-14"WC RANGE, 1-1/4 OUTLET WITH 1/2" ORIFICE, FACTORY SETTING OUTLET OF 7" W.C., FIELD SET AT 10" W.C. PROVIDE WITH ISOLATION GAS COCK.
PRV-3	PRESSURE REDUCING VALVE	WATER PRESSURE REDUCING VALVE BY WATTS, REGULATOR NO. 225 SERIES, VALVE SHALL HAVE BRONZE BODY AND BRONZE STRAINER, SET AT 80 PSI MAX PRESSURE.
TP-1	TRAP PRIMER STATION	SURFACE MOUNTED TRAP PRIMER ASSEMBLY STATION, PTS-4 MODEL BY PRECISION PLUMBING PRODUCTS. PROVIDE WITH 120V SOLENOID VALVE FOR ELECTRONIC CONTROL, 3-WIRE SINGLE POINT CONNECTION, 24-HR ADJUSTABLE TIMER, ATMOSPHERIC VACUUM BREAKER, CAP UNUSED MANIFOLD OPENINGS.

TURPIN & RATTAN ENGINEERING, INC.
CONSULTING ENGINEERS
4715 PALM AVENUE
LA MESA, CA 91941-5221
619 / 466 / 6224 FAX 466 / 6233
E-MAIL: ENGINEER@TRI360.COM

TREI PROJECT # 16432.S01

PREPARED FOR THE:
GROSSMONT UNION HIGH SCHOOL DISTRICT
P.O.BOX 1043
LA MESA, CALIFORNIA

PREPARED BY
PLATT/WHITELAW ARCHITECTS, INC.
4034 30TH STREET
SAN DIEGO, CA (619)546-4326 FAX (619)546-4360

VERIFICATION STAMP
DIV. OF THE STATE ARCHITECT
OFFICE OF REGULATION SERVICES
04-115030
FILE 107144
AC. ____ RS ____
DATE 04/17/17

4/18/17

PLUMBING SCHEDULES

CENTRAL PLANT EQUIPMENT UPGRADE

VALHALLA HIGH SCHOOL
1725 HILLSDALE ROAD
EL CAJON, CA 92019

REVISION	DATE

PROJECT NO. FNA #0561.10

FILE NAME:

DATE: 4/14/2017 DRAWN: EL/PS CHECKED: CR/MR

P-002

SHEET NO. 1 OF SHEETS

J:\16\16432.S01 - GUHSD Valhalla HS Central Plant Upgrade\16432.20\Acad\proj\16432.20_P-002_PLUMBING SCHEDULES.dwg 04/18/2017 17:09

PLUMBING - DEMOLITION FLOOR PLAN

SCALE: 1/4" = 1'-0"

KEYNOTES

P1 DEMOLISH HAKBIP WATER PIPING TO EXISTING BACKFLOW PREVENTOR. PREPARE FOR RECONNECTION.

P2 DEMOLISH 5" TOWER DRAIN DISCHARGE PIPING THROUGH WALL PENETRATION.

SHEET NOTES

1. REPRESENTED DEMOLITION MAY NOT INDICATE ENTIRE SCOPE OF DEMOLITION REQUIRED FOR THE WORK. CONTRACTOR SHALL VISIT SITE PRIOR TO BID TO ESTABLISH COMPLETE SCOPE OF WORK.
2. PRIOR TO DEMOLITION OF CONCRETE SLAB-ON-GRADE, CONDUCT UNDERGROUND VIDEO INVESTIGATION TO DETERMINE ROUTING (LOCATION) AND DEPTH OF EXISTING WASTE LINES. PROVIDE AUDIO-VIDEO RECORDING OF INVESTIGATION AND HAND DRAFTED SKETCH OF LOCATION AND DEPTH OF WASTE LINES TO ARCHITECT/ENGINEER.
3. EQUIPMENT SHALL BE MOVED THROUGH THE GATED ENTRY TO THE CENTRAL PLANT. REMOVAL OF EQUIPMENT THROUGH THE ROOF IS NOT PERMITTED.

TURPIN & RATTAN ENGINEERING, INC.
CONSULTING ENGINEERS
4719 PALM AVENUE
LA MESA, CA 91941-5221
619 / 466 / 6224 FAX 466 / 6233
EMAIL: ENGINEER@TREIEE.COM

TREI PROJECT # 16432.501

PREPARED FOR THE
GROSSMONT UNION HIGH SCHOOL DISTRICT
P.O.BOX 1043
LA MESA, CALIFORNIA

PREPARED BY
PLATT/WHITELAW ARCHITECTS, INC.
4084 30TH STREET
SAN DIEGO, CA (619)546-4920 FAX (619)546-4960

DIV. OF THE STATE ARCHITECT OFFICE OF REGULATION SERVICES
04-115930
FILE 10114
AC. P.O. 042217
DATE

4/18/17

PLUMBING - DEMOLITION FLOOR PLAN

CENTRAL PLANT EQUIPMENT UPGRADE

VALHALLA HIGH SCHOOL
1725 HILLSDALE ROAD
EL CAJON, CA 92019

REVISION	DATE

PROJECT NO. PWA #056LJO

FILE NAME:

DATE: 4/14/2017 DRAWN: EL/PS CHECKED: GR/MR

P-101

SHEET NO. 1 OF SHEETS

J:\VR\16432.501 - GUHSD Valhalla HS Central Plant Upgrade\16432.20_Architect\16432.20_P-101_PLUMBING - DEMOLITION FLOOR PLAN.dwg 04/18/2017 19:33

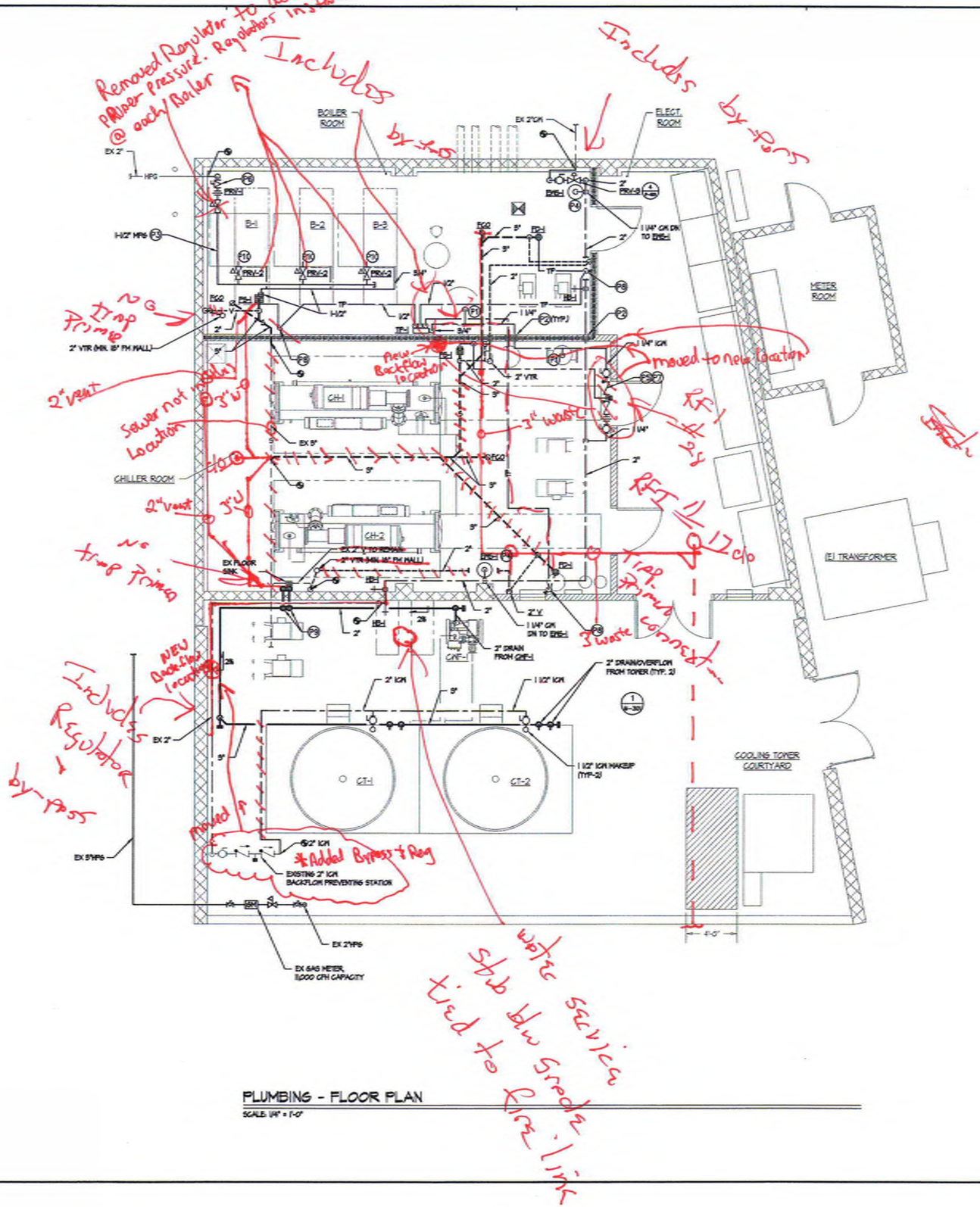

PLUMBING - FLOOR PLAN

SCALE: 1/4" = 1'-0"

KEYNOTES

P1 1 1/4" IW FOR EQUIPMENT MAKE UP WATER. FOR CONTINUATION OF IW, SEE MECHANICAL DIAGRAMS M-101 AND M-102.

P2 FOR FIRE RATED WALL PENETRATION, SEE FIRE RATED WALL PENETRATION METALLIC PIPE DETAIL SHEET 2/M-505.

P3 FOR MEDIUM PRESSURE GAS PIPE LINE SIZES, SEE MEDIUM PRESSURE GAS PIPING DIAGRAM SHEET P-002.

P4 FOR EMERGENCY SHOWER, ES-1 INSTALLATION, SEE EMERGENCY SHOWER DETAIL 1/P-502.

P5 ROUTE 1" DRAIN LINE FROM OUTLET OF BACK BLOW PREVENTOR TO FLOOR SINK FS-1. ROUTE 1" LINE BEHIND EXPANSION TANK AND AIR SEPARATOR.

P6 FOR GAS PRESSURE REGULATOR AND EARTHQUAKE VALVE INSTALLATION, SEE GAS PRESSURE REGULATOR DETAIL 8/P-501.

P7 PROVIDE BACKFLOW PREVENTER WITH INTERMEDIATE VENT DOWNSTREAM OF BLIND VALVE. ROUTE 1/2" VENT LINE TO FLOOR SINK, SEE DETAIL 4/P-502.

P8 ROUTE 1/2" TRAP PRIMER LINES DOWN ON WALL TO BELOW GRADE, THEN TO FIXTURE TRAP.

P9 COOLING TOWER AND CONDENSER WATER FILTER DRAIN PIPING SHALL BE SLOPED AT 1/4" PER LF TOWARDS DISCHARGE POINT. ROUTE THROUGH WALL TO EXISTING FLOOR SINK. SEAL WALL PENETRATION WEATHERTIGHT.

P10 PROVIDE GAS AND CONDENSATE DISCHARGE CONNECTIONS TO BOILER PER MANUFACTURER'S INSTRUCTIONS, SEE 4/P-501.

WALL LEGEND

1-HR RATED WALL

PREPARED FOR THE
GROSSMONT UNION HIGH SCHOOL DISTRICT
P.O.BOX 1043
LA MESA, CALIFORNIA

PREPARED BY
PLATT/WHITELAW ARCHITECTS, INC.
4094 30TH STREET
SAN DIEGO, CA (619)546-4920 FAX (619)546-4950

DIV. OF STATE ARCHITECT
OFFICE OF REGULATION SERVICES
04-115930
FILE #
AC
PLD
DATE 04/27/17

REGISTERED PROFESSIONAL ENGINEER
MICHAEL J. RATTAN
NO. M13447
Exp. 06/30/18
CIVIL
STATE OF CALIFORNIA
4/18/17

REGISTERED ARCHITECT
JAMES W. WHITELAW
No. 5-19275
Exp. 5-30-17
STATE OF CALIFORNIA

PLUMBING - FLOOR PLAN
CENTRAL PLANT EQUIPMENT UPGRADE
VALHALLA HIGH SCHOOL
1725 HILLSDALE ROAD
EL CAJON, CA 92019

REVISION	DATE

TURPIN & RATTAN ENGINEERING, INC.
CONSULTING ENGINEERS
4719 PALM AVENUE
LA MESA, CA 91941-5221
619 / 466 / 5224 FAX 466 / 6233
EMAIL: ENGINEER@TREISD.COM
TREI PROJECT # 16432.S01

PROJECT NO. FWA #056110
FILE NAME:
DATE: 4/14/2017
DRAWN: ELJPS
CHECKED: CRJMR

P-201

SHEET NO. OF SHEETS

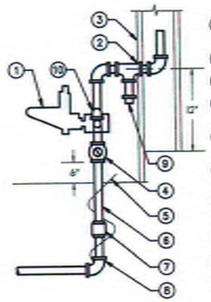

DETAIL KEYNOTES

1. PRESSURE REGULATOR SEE SCHEDULES
2. WATERPROOF SEAL
3. BUILDING WALL
4. PLUG VALVE OR BALL VALVE (THREADED)
5. 6" TRACER WIRE TAPED TO RISER (NO. 10 PLASTIC COVERED COPPER)
6. STD. PIPE SIZE RED BRASS LINED WITH PLASTIC
7. POLYETHYLENE TO METAL PIPE FITTING WITH "O" RING SEALS AND INSERT
8. POLYETHYLENE PIPING
9. DRIP LEG
10. HORIZONTAL EARTHQUAKE VALVE

HORIZONTAL GAS EARTHQUAKE VALVE: PACIFIC SEISMIC PRODUCTS MODEL 502(1) OR EQUAL. UL LISTING SA2452-E5201.

GAS PRESSURE REGULATOR

NO SCALE

8 / P-501

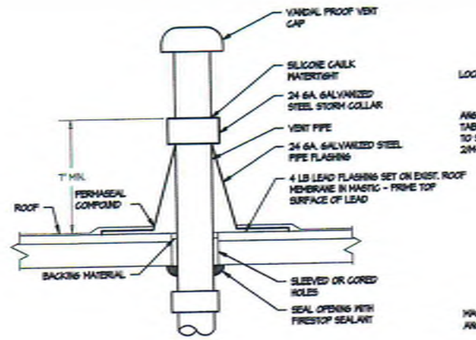

VENT THRU ROOF DETAIL

NO SCALE

5 / P-501

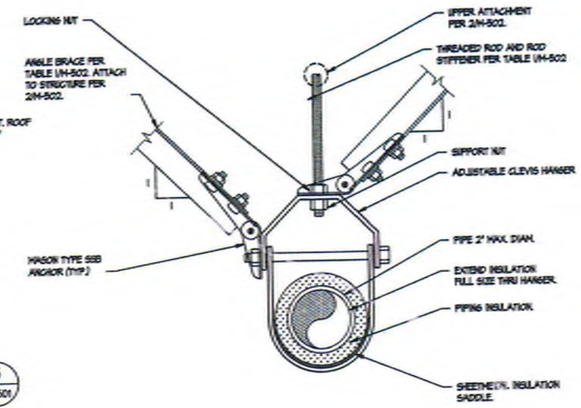

PIPE HANGER DETAIL

NO SCALE

3 / P-501

NOT USED

NO SCALE

1 / P-501

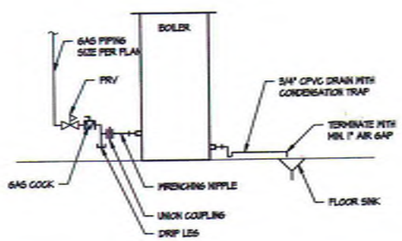

BOILER PIPING DETAIL

NO SCALE

9 / P-501

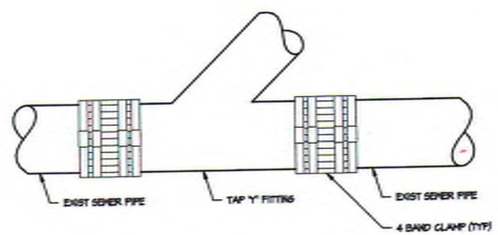

SEWER POINT OF CONNECTION DETAIL

NO SCALE

6 / P-501

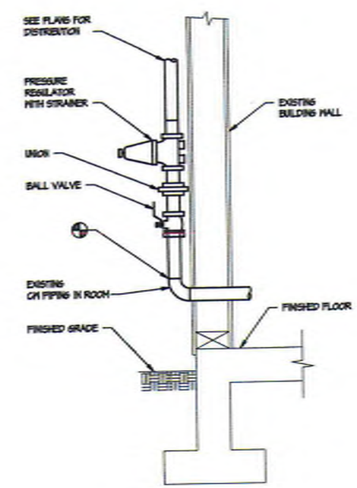

WATER PRESSURE REGULATOR

NO SCALE

4 / P-501

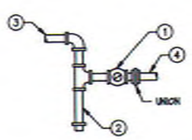

DETAIL KEYNOTES

1. GAS COCK
2. DRIP LEG
3. FROM PRV STATION
4. TO EQUIPMENT

GAS PIPING DRIP LEG

NO SCALE

10 / P-501

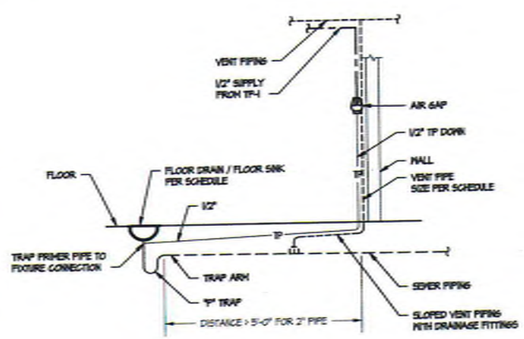

FLOOR DRAIN VENT CONNECTION DETAIL

NO SCALE

7 / P-501

NOT USED

NO SCALE

2 / P-501

TURPIN & RATTAN ENGINEERING, INC.
CONSULTING ENGINEERS
4519 PALM AVENUE
LA MESA, CA 91941-5221
619 / 466 / 6224 FAX 466 / 6233
E-MAIL: ENGINEER@TRDSD.COM

TREI PROJECT # 16432.S01

PREPARED FOR THE
GROSSMONT UNION HIGH SCHOOL DISTRICT
P.O.BOX 1043
LA MESA, CALIFORNIA

PREPARED BY
PLATT/WHITELAW ARCHITECTS, INC.
4034 30TH STREET
SAN DIEGO, CA (619)546-4320 FAX (619)546-4360

DIV. OF STATE ARCHITECT OFFICE OF REGULATION SERVICES
APPROVED STAMP
04-115030
FILE 07H4
AC
P.O.
DATE 04 27 17

DATE 4/18/17

PLUMBING DETAILS

CENTRAL PLANT EQUIPMENT UPGRADE

VALHALLA HIGH SCHOOL
1725 HILLSDALE ROAD
EL CAJON, CA 92019

REVISION	DATE

PROJECT NO. FMA #056L10

FILE NAME:

DATE: 4/14/2017 DRAWN: EL/PS CHECKED: CR/MR

P-501

SHEET NO. OF SHEETS

J:\16\16432.S01 - GUHSD Valhalla HS Central Plant Upgrade\16432.20\Valdarly\16432.20_P-501_PLUMBING DETAILS.dwg 04/26/2017 10:04

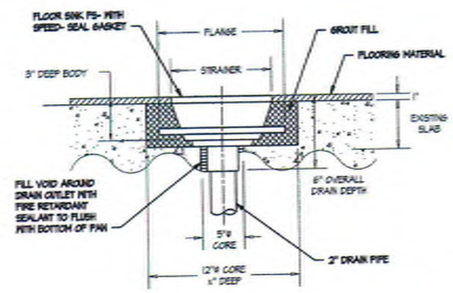

FLOOR SINK PIPING DETAIL (3 / P-502)

NO SCALE

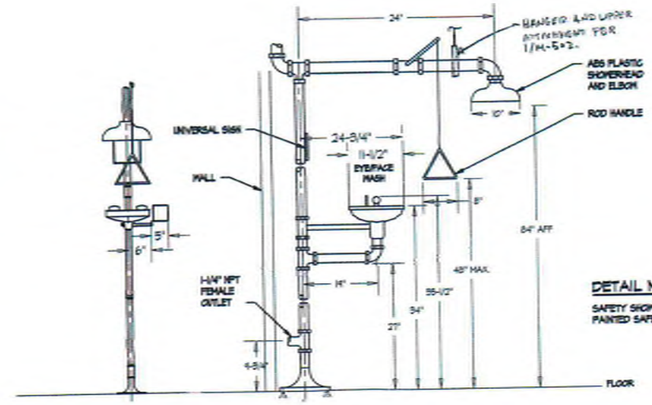

DETAIL NOTE

SAFETY SHOWER UNIT TO BE PAINTED SAFETY ORANGE

EMERGENCY SHOWER / EYEWASH DETAIL (1 / P-502)

NO SCALE

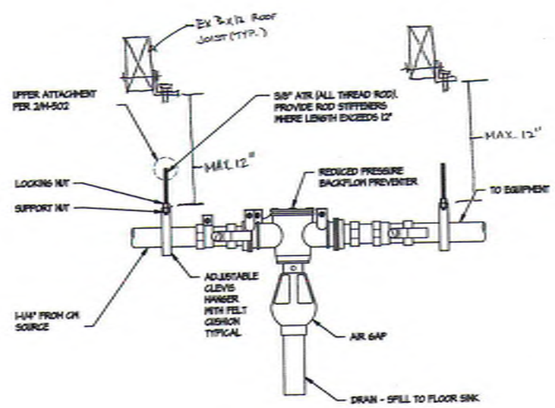

REDUCED PRESSURE BACKFLOW PREVENTER (4 / P-502)

NO SCALE

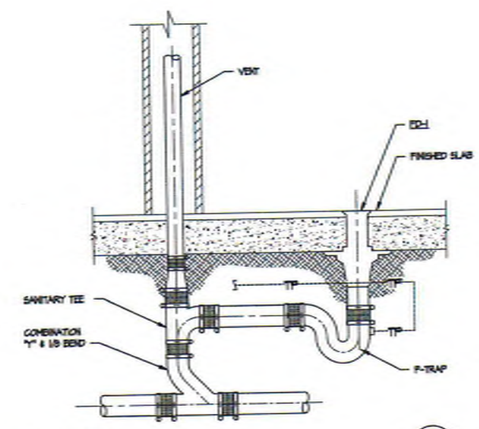

FLOOR DRAIN (2 / P-502)

NO SCALE

PREPARED FOR THE
GROSSMONT UNION HIGH SCHOOL DISTRICT
P.O.BOX 1043
LA MESA, CALIFORNIA

PREPARED BY
PLATT/WHITELAW ARCHITECTS, INC.
4094 30TH STREET
SAN DIEGO, CA (619)640-4350 FAX (619)640-4350

CERTIFICATION STAMP DSA-OFFICE OF ARCHITECT OFFICE OF REGULATION SERVICES
04-115930
FILE 10-14
AC. DR. RLB
DATE 04/27/17

REGISTERED PROFESSIONAL ENGINEER
NO. M13447
Exp. 06/30/18
MECHANICAL
STATE OF CALIFORNIA
04/18/17

REGISTERED ARCHITECT
STATE OF CALIFORNIA
RICHARD L. WHITELAW
04/18/17

PLUMBING DIAGRAMS

CENTRAL PLANT EQUIPMENT UPGRADE

VALHALLA HIGH SCHOOL
1725 HILLSDALE ROAD
EL CAJON, CA 92019

REVISION	DATE

TURPIN & RATTAN ENGINEERING, INC.
CONSULTING ENGINEERS
4719 PALM AVENUE
LA MESA, CA 91941-5221
619 / 466 / 6324 FAX 466 / 6233
E-MAIL: ENGINEER@TREI60.COM

TREI PROJECT # 16432.S01

PROJECT NO. PWA #056110

FILE NAME:

DATE: 4/14/2017 DRAWN: EL/PS CHECKED: CR/MR

P-502

SHEET NO. x OF SHEETS

A:\16\16432.S01 - GUHSD Valhalla HS Central Plant Upgrade\16432.20_P-502_PLUMBING DETAILS.dwg 04/26/2017 10:05

ELECTRICAL LEGEND

SYMBOL	DESCRIPTION
S	DASHED SYMBOL INDICATES EXISTING FIXTURE, OUTLET, DEVICE OR EQUIPMENT TO BE REMOVED.
$	FINE-LINED SYMBOL INDICATES EXISTING FIXTURE, OUTLET, DEVICE OR EQUIPMENT TO REMAIN.
$	CROSS MARK ON ANY SWITCH SYMBOL INDICATES EXISTING SWITCH OUTLET.
—EX—	EXISTING CONDUIT TO REMAIN.
—R—	EXISTING CONDUIT TO BE REMOVED IF IN AN ACCESSIBLE AREA OR TO BE ABANDONED IF IN AN INACCESSIBLE AREA.
A	INDICATES FIXTURE TYPE. SEE FIXTURE SCHEDULE FOR LAMP, WATTAGE, AND MOUNTING INFORMATION. TYPICAL FOR ROOM INDICATED, UNLESS OTHERWISE NOTED.
HA-1Is	INDICATES CONTROLLING SWITCH LES.
	DENOTES BRANCH CIRCUIT NUMBER SUPPLYING FIXTURE.
	WHEN USED, DENOTES PANELBOARD SUPPLYING FIXTURE.
	STRIP LIGHTING FIXTURE.
S=	SINGLE POLE, SINGLE THROW TOGGLE SWITCH, MOUNTED AT +48" AFF AT CENTER OF BOX U.O.N. SUBSCRIPT INDICATES CONTROLLING SWITCH LES.
OS	INDICATES AN OCCUPANCY SENSOR. FEATURE IS REQUIRED IN THIS SPACE/ROOM/AREA. EXACT TYPE(S), QUANTITY AND PHYSICAL PLACEMENT WITHIN THE SPACE/ROOM/AREA SHALL BE DETERMINED BY THE EQUIPMENT VENDOR AT TIME OF BID. COORDINATION WITH THE COMMISSIONING TEAM DURING CONSTRUCTION IS REQUIRED. OCCUPANCY SETTINGS SHALL BE FINALLY ADJUSTED AFTER FURNITURE, FINAL FINISHES, AND ALL LIGHTING EQUIPMENT ARE INSTALLED AND MADE OPERATIONAL.
D	DIMMER SWITCH, MOUNTED AT +48" AFF TO CENTER OF BOX U.O.N.
D OS	COMBINATION OCCUPANCY SENSOR/WALL SWITCH, WALL MOUNTED AT +48" AFF TO CENTER OF BOX U.O.N. SUBSCRIPT WHEN SHOWN INDICATES BI-LEVEL SWITCHING FUNCTIONS.
	DUPLEX RECEPTACLE, MOUNTED AT +18" AFF TO CENTER OF BOX U.O.N.
	DUPLEX RECEPTACLE, GFCI TYPE, MOUNTED AT +18" AFF TO CENTER OF BOX U.O.N.
	DOUBLE DUPLEX RECEPTACLE, MOUNTED AT +18" AFF TO CENTER OF BOX U.O.N.
	POWER DISTRIBUTION SWITCHBOARD. (SHED)
	FLUSH MOUNTED PANELBOARD.
	SURFACE MOUNTED PANELBOARD.
	SURFACE MOUNTED CABINET, AS NOTED.
	FLUSH MOUNTED CABINET, AS NOTED.
	FUSED DISCONNECT SWITCH. SIZE AS NOTED. (FDS)
	NON-FUSED DISCONNECT SWITCH. SIZE AS NOTED. (FDS)
J	JUNCTION BOX. SIZED PER CEC, U.O.N.
T	TRANSFORMER. SIZE AND MOUNTING AS NOTED. (XFMR)
	MOTOR CONNECTION.
AC 2	MECHANICAL EQUIPMENT REFERENCE.
T	DAMPER MOTOR CONNECTION (WITH TOGGLE DISCONNECT SWITCH, AS SHOWN)
	PULLBOX WITH SCREW COVER. SIZE AS REQUIRED.

ELECTRICAL LEGEND

SYMBOL	DESCRIPTION
	CONDUIT CONCEALED IN WALL OR CEILING SPACE.
	CONDUIT CONCEALED UNDER FLOOR SLAB OR UNDERGROUND.
	CONDUIT INSTALLED EXPOSED.
	CONDUIT INSTALLED IN RAISED ACCESS FLOOR SPACE.
	CONDUIT TURNED UP.
	CONDUIT TURNED DOWN.
	CONDUIT STUB-OUT TERMINATION.
	CONDUIT STUBBED UP AND CAPPED IN CEILING SPACE.
	FLEXIBLE METAL CONDUIT. INSTALL REQUIRED BRANCH CIRCUIT CONDUCTORS AND EQUIPMENT GROUND CONDUCTOR.
BRANCH CIRCUIT DESIGNATIONS:	
	3/4" CONDUIT WITH 2#12 CONDUCTORS PLUS #12 EQUIPMENT GROUNDING CONDUCTOR.
	3/4" CONDUIT WITH 3#12 CONDUCTORS PLUS #12 EQUIPMENT GROUNDING CONDUCTOR.
	3/4" CONDUIT WITH 4#12 CONDUCTORS PLUS #12 EQUIPMENT GROUNDING CONDUCTOR.
	3/4" CONDUIT WITH 5#12 CONDUCTORS PLUS #12 EQUIPMENT GROUNDING CONDUCTOR.
	3/4" CONDUIT WITH 6#12 CONDUCTORS PLUS #12 EQUIPMENT GROUNDING CONDUCTOR.
	3/4" CONDUIT WITH 7#12 CONDUCTORS PLUS #12 EQUIPMENT GROUNDING CONDUCTOR.
	1" CONDUIT WITH 8#12 CONDUCTORS PLUS #12 EQUIPMENT GROUNDING CONDUCTOR.
#10	A NUMBER ADJACENT TO THE HASH MARK IN ANY CONDUIT RUN INDICATES THE CONDUCTOR SIZE TO BE USED IN LIEU OF #12 AWG. CONDUIT AND EQUIPMENT GROUNDING CONDUCTOR SHALL BE SIZED PER CEC, U.O.N.
A-1,3	HOMERUN TO INDICATED PANELBOARD (A). NUMBERS (1,3) INDICATE BRANCH CIRCUIT NUMBERS.
3/4"-3#4/#10 E6	INDICATES 3/4" CONDUIT WITH (3) 3 AWG CONDUCTORS + (1) 10 AWG EQUIPMENT GROUND.
3/4"-3#4/3#10 (N)#10 E6	INDICATES 3/4" CONDUIT WITH (3) 10 AWG PHASE CONDUCTORS PLUS (3) 10 AWG INDIVIDUAL NEUTRAL CONDUCTORS + (1) 10 AWG EQUIPMENT GROUND.
(2) 3" 3-500KCM +#1/0 E6	INDICATES TWO (2) 3" CONDUITS WITH THREE (3) 500 kcmil CONDUCTORS PLUS ONE (1) 1/0 AWG EQUIPMENT GROUNDING CONDUCTOR IN EACH CONDUIT.
	WHEN HOMERUN IS NOT SHOWN, BRANCH CIRCUIT NUMBER(S) (AND PANELBOARD) ARE DESIGNATED BY NUMBERS ADJACENT TO OUTLET.
2 PA-7 PA-7	DENOTES BRANCH CIRCUIT(S) SUPPLYING OUTLET.
	WHEN USED, DENOTES PANELBOARD SUPPLYING OUTLET.
PA-13,15 #10	DENOTES BRANCH CIRCUIT WIRE SIZE WHEN OTHER THAN 12 AWG.
	BRANCH CIRCUIT WIRING NOTE: MULTIWIRE BRANCH CIRCUITS SHALL ORIGINATE FROM MULTIPLE-POLE CIRCUIT BREAKERS AS REQUIRED BY CEC (NEC) 210.4(B). BRANCH CIRCUITS THAT ORIGINATE FROM SINGLE-POLE CIRCUIT BREAKERS SHALL NOT BE INSTALLED AS PART OF A MULTIWIRE CIRCUIT. EACH SINGLE-POLE BREAKER CIRCUIT SHALL HAVE A DEDICATED NEUTRAL CONDUCTOR. REFER TO THE PANEL SCHEDULES FOR CIRCUIT BREAKER REQUIREMENTS.

ABBREVIATIONS

ABBREV.	DESCRIPTION
AF	AMPS FRAME, OR AMPS FUSE RATING
AFF	ABOVE FINISHED FLOOR
AIC	AMPERES INTERRUPTING CAPACITY
ATS	AUTOMATIC TRANSFER SWITCH
CEC	CALIFORNIA ELECTRICAL CODE (TITLE 24, PART 3).
C.O.	CONDUIT ONLY
DEMO	DEMOLISH/DEMOLITION
EG	EQUIPMENT GROUND, OR EQUIPMENT GROUNDING CONDUCTOR.
FAAP	FIRE ALARM ANNUNCIATOR PANEL
FACP	FIRE ALARM CONTROL PANEL
GFCI	GROUND-FAULT CIRCUIT INTERRUPTER
KVA	KILOVOLTAMPS (1000VA)
KW	KILOWATT (1000)
NEC	NATIONAL ELECTRICAL CODE
NEMA	NATIONAL ELECTRICAL MANUFACTURERS ASSOCIATION
NFPA	NATIONAL FIRE PROTECTION ASSOCIATION
P	POLE
PH	PHASE
SCCR	SHORT CIRCUIT CURRENT RATING
SPD	SURGE PROTECTIVE DEVICE
SSBJ	SUPPLY SIDE BONDING JUMPER
TYP	TYPICAL
U.O.N.	UNLESS OTHERWISE NOTED
VFD	VARIABLE FREQUENCY DRIVE
WP	WEATHERPROOF
+48"	MOUNTING HEIGHT ABOVE FINISHED FLOOR TO CENTER OF DEVICE U.O.N.
#	PHASE

GENERAL NOTES

1. ALL WORK SHALL BE IN COMPLIANCE WITH THE 2016 EDITION OF THE CEC AND WHERE APPLICABLE AS AMENDED BY THE LOCAL ORDINANCES AND CODES OF GOVERNING MUNICIPALITIES.
2. ALL ELECTRICAL DRAWINGS ARE TO BE READ IN CONJUNCTION WITH THE PROJECT SPECIFICATIONS AND ALL OTHER RELATED CONTRACT DOCUMENTS.
3. VERIFY EXACT LOCATION, SIZE, AND EXTENT OF ALL EXISTING UTILITIES, OBSTRUCTIONS AND/OR OTHER CONDITIONS WHICH MAY AFFECT THE PROPOSED WORK UNDER THE PROJECT. THE CONTRACTOR SHALL TAKE EVERY PRECAUTION TO PREVENT DAMAGE TO EXISTING WORK. ANY DAMAGE TO EXISTING UTILITIES OR STRUCTURES DURING CONSTRUCTION SHALL BE IMMEDIATELY REPAIRED OR REPLACED IN ACCORDANCE WITH THE OWNER'S DIRECTION AT THE CONTRACTOR'S EXPENSE.
4. CAREFULLY EXAMINE ALL CONTRACT DRAWINGS/SPECIFICATIONS AND BE RESPONSIBLE FOR THE PROPER FITTING OF MATERIALS AND EQUIPMENT AT EACH LOCATION AS INDICATED WITHOUT SUBSTANTIAL ALTERATION. IN AS MUCH AS THE DRAWINGS ARE GENERALLY DIAGRAMMATIC AND BECAUSE OF THE SMALL SCALE OF THE DRAWINGS, IT IS NOT POSSIBLE TO INDICATE OFFSETS, FITTINGS AND ACCESSORIES WHICH MAY BE REQUIRED. FURNISH FITTINGS REQUIRED TO MEET SUCH CONDITIONS AT NO COST TO THE OWNER.
5. CONDUIT RUNS ARE SHOWN DIAGRAMMATICALLY ONLY AND SHALL BE INSTALLED IN A MANNER TO PREVENT CONFLICTS WITH EQUIPMENT AND STRUCTURAL CONDITIONS. EXPOSED CONDUITS SHALL BE INSTALLED TIGHT AGAINST AND PARALLEL TO BEAMS AND WALLS.
6. ALL EXPOSED CONDUIT RUNS WITHIN THE BUILDING SHALL BE INSTALLED TIGHT AGAINST BOTTOM OF BEAMS UNLESS OTHERWISE NOTED.
7. CONDUITS SHALL BE TERMINATED SO AS TO PERMIT FINAL CONNECTIONS TO MOTORS AND OTHER EQUIPMENT WITHOUT EXTENSIVE USE OF FLEXIBLE CONDUIT.
8. CONDUITS WHICH TERMINATE AT SWITCHBOARD OR PANELBOARDS SHALL BE LOCATED FOR PROPER ALIGNMENT WITHOUT THE NEED FOR ADDITIONAL GUTTERS, WIREWAYS OR PANEL EXTENSIONS.
9. THE WIRING DIAGRAMS, QUANTITY AND SIZE OF WIRES AND CONDUITS ARE BASED UPON SELECTED STANDARD COMPONENTS OF ELECTRICAL EQUIPMENT. MODIFICATIONS APPROVED BY THE ARCHITECT/ENGINEER MAY BE MADE BY THE CONTRACTOR AT HIS EXPENSE TO ACCOMMODATE EQUIPMENT ACTUALLY PURCHASED. THE BASIC SEQUENCE AND METHOD OF CONTROL SHALL BE MAINTAINED AS INDICATED ON THE DRAWINGS AND SPECIFICATIONS.
10. ALL SURFACE MOUNTED PANELS AND PANELBOARDS SHALL BE MOUNTED TO MAINTAIN A 1/4" AIR SPACE BETWEEN THE ENCLOSURE AND THE WALL.
11. ALL PANELBOARDS SHALL BE MOUNTED SO THAT THE DISTANCE FROM THE TOP OF THE HIGHEST POSSIBLE CIRCUIT BREAKER OPERATING HANDLE TO THE FLOOR SHALL NOT EXCEED 6'-6".
12. NAMEPLATES SHALL CONFORM STRICTLY TO INSTRUCTIONS AS SPECIFIED IN THE ELECTRICAL SPECIFICATIONS AND ON THE DRAWINGS. THE FOLLOWING SHALL HAVE NAMEPLATES:
    a. ALL MAIN BREAKERS
    b. ALL FEEDER BREAKERS IN SWITCHBOARDS AND DISTRIBUTION PANELS.
    c. ALL PANELBOARDS AND SWITCHBOARDS
    d. DISCONNECT SWITCHES
    e. COMBINATION MOTOR STARTERS
    f. ENCLOSED CIRCUIT BREAKERS
    g. CONTROL CABINETS
13. ALL FEEDERS AND BRANCH CIRCUITS SHALL HAVE AN INSULATED EQUIPMENT GROUNDING CONDUCTOR ROUTED WITH THE PHASE/NEUTRAL CONDUCTORS. SYSTEM AND EQUIPMENT GROUNDING CONDUCTORS SHALL BE SIZED AND INSTALLED AS REQUIRED BY THE CEC U.O.N.
14. ALL CIRCUIT PROTECTIVE DEVICES SHALL HAVE THE REQUIRED RATINGS AND INTERRUPTING CAPACITY EQUAL TO OR GREATER THAN 10% OF THE AVAILABLE SHORT CIRCUIT CURRENT AT ITS SUPPLY TERMINAL.
15. ALL ELECTRICAL PANELS, LIGHT FIXTURES AND EQUIPMENT RECESSED IN FIRE RATED WALLS AND CEILINGS SHALL BE BOXED WITH EQUIVALENT HOUR RATED CONSTRUCTION.
16. OUTLET BOXES, UTILIZATION EQUIPMENT CABINETS, CONDUIT SYSTEMS, LIGHTING FIXTURES AND CONVENIENCE OUTLETS SHALL BE GROUNDED AND BONDED IN ALL ELECTRICAL SYSTEMS OPERATING AT 48 VOLTS AND ABOVE. EACH GROUND WIRE SHALL BE TERMINATED AT THE EQUIPMENT GROUND BAR OR TERMINAL. EQUIPMENT GROUND WIRES SHALL BE SIZED PER CEC 250.122.
17. ALL CONDUIT ONLY (C.O.) SHALL HAVE A PULL ROPE CONTAINED WITHIN. LEAVE MINIMUM OF 2'-0" SLACK AT EACH END.
18. ALL CONDUITS SHALL BE A MINIMUM TRADE SIZE OF 3/4".
19. ALL FEEDER AND BRANCH CIRCUIT WIRING SHALL BE COPPER IN RACEWAY, PER SPECIFICATIONS, REGARDLESS OF APPLICATION. NO ALUMINUM WIRING OR MC CABLE OR AC CABLE SHALL BE USED.
20. ALL LIGHTING FIXTURES THAT MAY BE IN CONTACT WITH THE BUILDING'S INSULATION SHALL BE UL LISTED FOR SUCH INSTALLATIONS.
21. ALL LIGHTING FIXTURES SHALL BE SUPPORTED FOR SEISMIC RESTRAINT PER REQUIREMENTS OF THE CALIFORNIA BUILDING CODE.
22. ALL EQUIPMENT AND MATERIALS REMOVED BY THE CONTRACTOR SHALL BE LEGALLY DISPOSED OF BY THE CONTRACTOR UNLESS OTHERWISE NOTED.
23. FIELD VERIFY EXISTING CONDITIONS AND ADVISE ARCHITECT/ENGINEER OF ANY DISCREPANCIES OR DEVIATIONS BETWEEN PLANS AND ACTUAL CONDITIONS PRIOR TO SUBMITTING BID.

GENERAL NOTES

24. IF THERE ARE CONFLICTS WITHIN THESE ELECTRICAL DRAWINGS OR BETWEEN THE ELECTRICAL DRAWINGS AND THE SPECIFICATIONS, OR BETWEEN THE ELECTRICAL DRAWINGS AND ANY MECHANICAL, ARCHITECTURAL, PLUMBING OR STRUCTURAL DRAWING, BID THE MORE EXPENSIVE OR ELABORATE PROCESS OR PROCEDURE SHOWN AND CALL THE DISCREPANCY TO THE ARCHITECT/ENGINEER'S ATTENTION. SHOULD THE CLIENT, IN ITS DISCRETION, CHOOSE TO IMPLEMENT THE CHEAPER OR SIMPLER PROCEDURE AFTER BID OPENING, A CREDIT CHANGE ORDER WILL BE ISSUED TO THE CONTRACTOR.
25. ALL COLD WATER PIPE GROUND CONNECTIONS SHALL BE MADE WITHIN 5 FT. OF COLD WATER PIPE ENTRANCE INTO THE BUILDING. (REFERENCE CEC 250.52)
26. WHERE 120V BRANCH CIRCUITS EXCEED 40 FEET IN LENGTH (200 FEET FOR 277V) INCREASE WIRE SIZE TO THE NEXT LARGER AWG.
27. THE FOLLOWING BENDING RADII SHALL BE MAINTAINED FOR ALL UNDERGROUND COMMUNICATION CONDUIT SWEEPS:

CONDUIT SIZE	SWEEP MINIMUM RADIUS
2"	24"
3"	36"
4"	48"

28. EXIT SIGNS SHALL BE LOCATED AS NECESSARY TO CLEARLY INDICATE THE DIRECTION OF EGRESS TRAVEL. NO POINT SHALL BE MORE THAN 100'-0" FROM THE NEAREST VISIBLE SIGN. EXIT SIGNS SHALL BE READILY VISIBLE FROM ANY DIRECTION OF APPROACH.
29. WIRING FROM EMERGENCY SOURCES SHALL BE KEPT ENTIRELY SEPARATE AND INDEPENDENT OF ALL OTHER WIRING AND EQUIPMENT, AND SHALL NOT ENTER THE SAME RACEWAY, CABLE BOX OR CABINET WITH OTHER WIRING. (REFERENCE CEC 700.4)
30. ALL OUTDOOR RECEPTACLES SHALL BE PROVIDED WITH WEATHERPROOF WHILE IN USE COVERS.
31. WHERE ITEMS ARE INDICATED FOR DISCONNECTION OR REMOVAL, REMOVE ALL ASSOCIATED CONDUIT, WIRING, SUPPORTS, AND BOXES BACK TO SOURCE UNLESS OTHERWISE NOTED. REMOVE CONDUIT FLUSH WITH SLAB, PATCH WALLS AND FLOORS NOT SCHEDULED FOR DEMOLITION.
32. SEAL ALL PENETRATIONS OF RATED WALLS WITH U.L. LISTED FIRE STOP SYSTEM.
33. ALL ELECTRICAL COMPONENTS SHALL BE ANCHORED AND INSTALLED PER THE DETAILS ON THE DSA APPROVED CONSTRUCTION DOCUMENTS. WHERE NO DETAIL IS INDICATED, THE FOLLOWING COMPONENTS SHALL BE ANCHORED OR BRACED TO MEET THE FORCE AND DISPLACEMENT REQUIREMENTS PRESCRIBED IN THE 2016 CBC, SECTIONS 1616A1.18 THROUGH 1616A1.26 AND ASCE 7-10 CHAPTER 13, 26 AND 30.

    I. ALL PERMANENT EQUIPMENT AND COMPONENTS.
    2. TEMPORARY OR MOVABLE EQUIPMENT THAT IS PERMANENTLY ATTACHED (E.G. HARD WIRED) TO THE BUILDING UTILITY SERVICES SUCH AS ELECTRICITY, GAS OR WATER.
    3. MOVABLE EQUIPMENT WHICH IS STATIONED IN ONE PLACE FOR MORE THAN 8 HOURS AND HEAVIER THAN 400 POUNDS ARE REQUIRED TO BE ANCHORED WITH TEMPORARY ATTACHMENTS.

    THE FOLLOWING ELECTRICAL COMPONENTS SHALL BE POSITIVELY ATTACHED TO THE STRUCTURE, BUT THE ATTACHMENT NEED NOT BE DETAILED ON THE PLANS. THESE COMPONENTS SHALL HAVE FLEXIBLE CONNECTIONS PROVIDED BETWEEN THE COMPONENT AND ASSOCIATED DUCTWORK, PIPING AND CONDUIT.

    A. COMPONENTS WEIGHING LESS THAN 400 POUNDS AND HAVING A CENTER OF MASS LOCATED 4 FEET OR LESS ABOVE THE ADJACENT FLOOR OR ROOF LEVEL THAT DIRECTLY SUPPORT THE COMPONENT.
    B. COMPONENTS WEIGHING LESS THAN 20 POUNDS, OR IN THE CASE OF DISTRIBUTED SYSTEMS, LESS THAN 5 POUNDS PER FOOT, WHICH ARE SUSPENDED FROM A ROOF OR FLOOR OR HUNG FROM A WALL.

    FOR THOSE ELEMENTS THAT DO NOT REQUIRE DETAILS ON THE APPROVED DRAWINGS, THE INSTALLATION SHALL BE SUBJECT TO THE APPROVAL OF THE STRUCTURAL ENGINEER OF RECORD AND DSA DISTRICT STRUCTURAL ENGINEER. THE PROJECT INSPECTOR WILL VERIFY THAT ALL COMPONENTS AND EQUIPMENT HAVE BEEN ANCHORED IN ACCORDANCE WITH ABOVE REQUIREMENTS.

34. PIPING, DUCTWORK, AND ELECTRICAL DISTRIBUTION SYSTEMS SHALL BE BRACED TO COMPLY WITH THE FORCES AND DISPLACEMENTS PRESCRIBED IN ASCE 7-10 SECTION 13.3 AS DEFINED IN ASCE 7-10 SECTION 13.6.3, 13.6.7, 13.6.5.6, AND 2016 CBC, SECTIONS 1616A 1.23, 1616A 1.24, 1616A 1.25 AND 1616A1.26.

    THE BRACING AND ATTACHMENTS TO THE STRUCTURE SHALL BE DETAILED ON THE APPROVED DRAWINGS OR THEY SHALL COMPLY WITH ONE OF THE OSHPD PRE-APPROVALS (OPA 4).

    COPIES OF THE BRACING SYSTEM INSTALLATION GUIDE OR MANUAL SHALL BE AVAILABLE ON THE JOBSITE PRIOR TO THE START OF HANGING AND BRACING OF THE PIPE, DUCTWORK, AND ELECTRICAL DISTRIBUTION SYSTEMS.

    THE STRUCTURAL ENGINEER OF RECORD SHALL VERIFY THE ADEQUACY OF THE STRUCTURE TO SUPPORT THE HANGER AND BRACE LOADS.

35. DIVISION 26 CONTRACTOR SHALL CLOSELY COORDINATE THE RACEWAY INSTALLATION WITH THE DIVISION 27 CONTRACTOR. DIVISION 27 SHALL INSTRUCT DIVISION 26 ON THE SPECIAL REQUIREMENTS FOR THE INSTALLATION OF FIBER OPTIC AND CATEGORY 6 RACEWAYS. DIVISION 27 SHALL INSPECT AND ACCEPT RACEWAY SYSTEMS PRIOR TO THE INSTALLATION OF ANY DATA WIRING.
36. FOR FIRE ALARM SYMBOLS REFER TO SHEET EF-001.

SINGLE LINE DIAGRAM LEGEND

SYMBOL	DESCRIPTION
	DISCONNECT SWITCH.
	LOW VOLTAGE CIRCUIT BREAKER.
	FUSE, SIZE AND TYPE AS NOTED.
	CIRCUIT BREAKER WITH GROUND FAULT PROTECTION.
	POWER TRANSFORMER.
	GROUND CONNECTION.
	ENGINE GENERATOR. SIZE AND TYPE AS NOTED.
VFD	VARIABLE FREQUENCY DRIVE CONNECTION.
60A 3P	SWITCH SIZE; NO. OF POLES
60A	FUSE SIZE
100AT 225AF 3P	TRIP SETTING; FRAME SIZE; NO. OF POLES

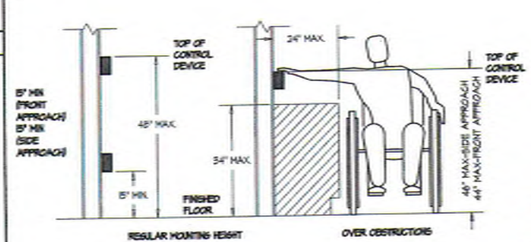

NOTE

WHERE LIGHT SWITCHES, RECEPTACLES, TELEPHONE/DATA OUTLETS, DIMMING CONTROL STATIONS, FIRE ALARM PULL STATIONS OR OTHER OPERABLE OUTLET DEVICES OCCUR OVER FIXED OBSTRUCTIONS (SUCH AS CASEWORK, ETC) RESPECTIVE DEVICE MOUNTING HEIGHT LIMITS AFF SHALL BE AS TYPICALLY DEPICTED ABOVE.

MOUNTING HEIGHT LIMITS OVER OBSTRUCTIONS (1 / E-001)

NO SCALE

Per GW Driver RFI # 18 ok to use Emt abv 10'

Per GW Driver RFI # 19 3/4" Conduit is min. for lighting Runs

STRUCTURAL NOTE

UNLESS SPECIFICALLY SHOWN ON THESE PLANS NO STRUCTURAL MEMBER SHALL BE CUT, DRILLED NOR NOTCHED WITHOUT PRIOR WRITTEN AUTHORIZATION FROM THE STRUCTURAL ENGINEER OF RECORD AND DISTRICT STRUCTURAL ENGINEER FROM DIVISION OF THE STATE ARCHITECT.

SPECIAL NOTE

ALL EXISTING SYSTEMS, POWER, DATA, FIRE ALARM, TELEPHONE, BELLS, CLOCKS, ETC. TO REMAIN OPERATIONAL THROUGHOUT CONSTRUCTION.

TURPIN & RATTAN ENGINEERING, INC.
CONSULTING ENGINEERS
4719 PALM AVENUE
LA MESA, CA 91941-5221
619 / 466 / 5224 FAX 466 / 5233
E-MAIL: ENGINEER@TREBSO.COM

TREI PROJECT # 16432.S01

PREPARED FOR THE
GROSSMONT UNION HIGH SCHOOL DISTRICT
P.O.BOX 1043
LA MESA, CALIFORNIA

PREPARED BY
PLATT/WHITELAW ARCHITECTS, INC.
4094 30TH STREET
SAN DIEGO, CA (619)549-4888 FAX (619)549-4880

CERTIFICATION STAMP
DIV. OF THE STATE ARCHITECT
OFFICE OF REGULATION SERVICES
04-115030
FILE #2144
AC
DATE 04/14/17

ELECTRICAL LEGEND AND GENERAL NOTES

CENTRAL PLANT EQUIPMENT UPGRADE

VALHALLA HIGH SCHOOL
1725 HILLSDALE ROAD
EL CAJON, CA 92019

REVISION	DATE

PROJECT NO. PWA #2861.10

FILE NAME:

DATE: 4/14/2017 DRAWN: EL/PS CHECKED: CR/MR

E-001

SHEET NO. 1 OF SHEETS

C:\Users\Al Rigg\appdata\local\temp\AcPublish_4384\16432.00_E-001_ELECTRICAL LEGEND AND GENERAL NOTES.dwg 04/18/2017 19:59

LIGHTING FIXTURE SCHEDULE

FIXTURE TYPE	MANUFACTURER AND CATALOG NUMBER ③	EQUIVALENT MANUFACTURER SUBJECT TO APPROVAL OF SHOP DRAWINGS	LAMPS QTY.	LAMPS TYPE	LAMPS WATTS	LAMPS COLOR TEMP.	FIXTURE INPUT VOLTS	FIXTURE TOTAL INPUT WATTS	BALLAST OR DRIVER TYPE	MOUNTING ②④⑤	DESCRIPTION ①⑥
Ⓐ	PHILIPS DAY-BRITE LF-4-PR-SI-40-0-LA6-MOUNTING HARDWARE	COOPER METALUX SILED SERIES LITHONIA ILON SERIES OR ANY TRUE EQUAL (INCLUDING EQUAL OR GREATER DELIVERED LUMEN OUTPUT AND EQUAL OR LESS TOTAL FIXTURE WATTAGE)	-	LED	55	4000°K	277	55	ELECTRONIC	SURFACE	2 1/8" X 4' 5100 LUMEN LED WRAPAROUND LUMINAIRE WITH CONTOURED FROSTED ACRYLIC LENS AND MATTE WHITE FINISH. CHAIN HANG FIXTURE AT 9'-0" WHERE OBSTACLES PREVENT SURFACE MOUNTING.
Ⓑ	PHILIPS GARDCO 121-BL-1000-WH-55-2-UNV-BK-H5	ANY TRUE EQUAL (INCLUDING EQUAL OR GREATER DELIVERED LUMEN OUTPUT AND EQUAL OR LESS TOTAL FIXTURE WATTAGE)	-	LED	55	4000°K	277	55	ELECTRONIC	SURFACE WALL	FULL CUTOFF 4800 LUMEN LED SCONCE WITH TYPE 2 (WIDE THROW) OPTICS, DIFFUSING LENS, DIE-CAST ALUMINUM HOUSING WITH TEXTURED POLYESTER POWDER COAT FINISH AND INTERNAL PASSIVE INFRARED MOTION SENSOR. WALL MOUNTED BOX FOR SURFACE CONDUIT. U.L. LISTED FOR WET LOCATIONS. MOUNT AT 10'-0"

FIXTURE NOTES

1. FIXTURE CONNECTIONS SHALL BE AS INDICATED ON THE PLANS AND SHALL COMPLY WITH THE APPLICABLE REQUIREMENTS OF TITLE 24, CALIFORNIA ENERGY EFFICIENCY REGULATIONS.
2. ALL SURFACE MOUNTED FIXTURES SHALL BE SUPPORTED PER SUN-502. ALL LIGHT FIXTURES SHALL BE INSTALLED PER THE CALIFORNIA BUILDING CODE.
3. CATALOG NUMBERS ARE BASED ON VENDOR INFORMATION, SALES LITERATURE AND PHOTOMETRIC DATA ON HAND AT THE TIME OF PROJECT DESIGN BY TURPIN & RATTAN AND ARE INTENDED TO CONVEY THE FEATURES/PERFORMANCE REQUIRED. EACH FIXTURE MUST BE PROVIDED COMPLETE WITH ALL FITTINGS AS APPROPRIATE FOR PROPER MOUNTING AT THE LOCATIONS INDICATED.
4. LINEAR FIXTURES ARE GRAPHICALLY SHOWN IN MULTIPLES OF 4'-0" LENGTHS. CONTRACTOR SHALL ORDER FIXTURES AS ONE-PIECE 4'-0", 8'-0", 12'-0" OR 16'-0" AS APPROPRIATE USING THE MOST EFFICIENT DISTRIBUTION OF DRIVERS AND INCORPORATING THE MOST SYMMETRICAL APPEARANCE OF THE SUSPENSION ELEMENTS. FOR FURTHER CLARIFICATION PRIOR TO BIDDING, PRICING, OR ORDERING CONFER WITH ENGINEER.

NOTE

LIGHTING CONTROLS VENDOR SHALL BE RESPONSIBLE FOR PROVIDING ALL PLENUM RATED COMMUNICATIONS CABLING WITH TERMINATIONS, TOGETHER WITH COORDINATION AS NECESSARY FOR THE SUPPLY OF ALL INTEGRATED LIGHTING CONTROL INTERFACE DEVICES IN ALL LIGHT FIXTURES IRRESPECTIVE OF FIXTURE MANUFACTURER TO OFFER A FULLY OPERABLE TITLE 24 COMPLIANT LIGHTING CONTROL SYSTEM.

TURPIN & RATTAN ENGINEERING, INC.
CONSULTING ENGINEERS
4719 PALM AVENUE
LA MESA, CA 91941-5221
619 / 466 / 6224 FAX 466 / 6233
E-MAIL: ENGINEER@TREIEO.COM

TREI PROJECT # 16432.501

PREPARED FOR THE
GROSSMONT UNION HIGH SCHOOL DISTRICT
P.O.BOX 1043
LA MESA, CALIFORNIA

PREPARED BY
PLATT/WHITELAW ARCHITECTS, INC.
4094 30TH STREET
SAN DIEGO, CA (619)546-4329 FAX (619)546-4950

CERTIFICATION STAMP DSA - DIVISION OF STATE ARCHITECT OFFICE OF REGULATION SERVICES
04-115930
FILE: 07144
A.C. DSA 04-27717
DATE

REGISTERED PROFESSIONAL ENGINEER
JAMES A. KEY
19334
Exp. 12-31-18
ELECTRICAL
STATE OF CALIFORNIA

REGISTERED ARCHITECT
STATE OF CALIFORNIA

FIXTURE SCHEDULE

CENTRAL PLANT EQUIPMENT UPGRADE

VALHALLA HIGH SCHOOL
1725 HILLSDALE ROAD
EL CAJON, CA 92019

REVISION	DATE

PROJECT NO. FWA #0561.10

FILE NAME:

DATE: 4/14/2017 DRAWN: EL/PS CHECKED: CR/MR

E-002

SHEET NO. OF SHEETS

J:\16\16432.501 - GUHSD Valhalla HS Central Plant Upgrade\16432.00\Acad\dwg\16432.00_E-002_FIXTURE SCHEDULE.dwg 04/14/2017 13:11

STATE OF CALIFORNIA
INDOOR LIGHTING
(CEC-NRCC-LTI-01-E (Revised 09/16))
CALIFORNIA ENERGY COMMISSION
NRCC-LTI-01-E
CERTIFICATE OF COMPLIANCE
[Page 1 of 6]
Indoor Lighting
Project Name: Valhalla Central Plant — Date Prepared: 1/12/2017

A. General Information

Climate Zone: 10	Conditioned Floor Area: 0				
	Unconditioned Floor Area: 1,915				
Building Type:	☐ Nonresidential	☐ High-Rise Residential	☐ Hotel/Motel		
☐ Schools	☐ Relocatable Public Schools	☐ Conditioned Spaces	☒ Unconditioned Spaces		
Phase of Construction:	☐ New Construction	☐ Addition	☐ Alteration		
Method of Compliance:	☐ Complete Building	☒ Area Category	☐ Tailored		
Project Address:					

B. Lighting Compliance Documents (select yes for each document included)

For detailed instructions on the use of this and all Energy Efficiency Standards compliance documents, refer to the Nonresidential Manual published by the California Energy Commission.

YES	NO	CEPAR DOC.	TITLE
☒	☐	NRCC-CTI-01-E	Certificate of Compliance. All Pages required on plans for all submittals.
☒	☐	NRCC-CTI-02-E	Lighting Controls, Certificate of Compliance, and Fail Calculation. All Pages required on plans for all submittals.
☒	☐	NRCC-CTI-03-E	Indoor Lighting Power Allowance
☐	☒	NRCC-CTI-04-E	Tailored Method Worksheets
☐	☒	NRCC-CTI-05-E	Line Voltage Track Lighting Worksheets
☐	☐	NRCC-CTI-06-E	Indoor Lighting Existing Conditions

CA Building Energy Efficiency Standards - 2016 Nonresidential Compliance — April 2016

STATE OF CALIFORNIA
INDOOR LIGHTING
(CEC-NRCC-LTI-01-E (Revised 09/16))
CALIFORNIA ENERGY COMMISSION
NRCC-LTI-01-E
CERTIFICATE OF COMPLIANCE
[Page 1 of 6]
Indoor Lighting
Project Name: Valhalla Central Plant — Date Prepared: 1/12/2017

C. Summary of Allowed Lighting Power

Conditioned and unconditioned space lighting must not be combined for compliance

Indoor Lighting Power for Conditioned Spaces		Watts	Indoor Lighting Power for Unconditioned Spaces		Watts
01	Installed Lighting NRCC-LTI-01-E, Table B, page 3	+ 0	Installed Lighting NRCC-LTI-01-E, Table B, page 3	+	792
02	Portable Only for Offices NRCC-LTI-01-E, Table G, page 4	+			
03	Minus Lighting Control Credits NRCC-LTI-02-E, page 3	- 0	Minus Lighting Control Credits NRCC-LTI-02-E, page 3	-	0
04	Adjusted Installed Lighting Power (row 1 plus row 2 minus row 3)	= 0	Adjusted Installed Lighting Power (row 1 minus row 3)	=	792
Compliss ONLY if Installed ≤ Allowed (Box 04 < Box 05)			Compliss ONLY if Installed ≤ Allowed (Box 04 < Box 05)		
05	Allowed Lighting Power Conditioned: NRCC-LTI-03-E, page 1	0	Allowed Lighting Power Unconditioned: NRCC-LTI-03-E, page 1		850

Alterations with replacement luminaires that have at least 30/20% lower power compared to the original existing luminaires, may instead use the allowed wattage from NRCC-LTI-06, page 2

Alterations with replacement luminaires that have at least 30/20% lower power compared to the original existing luminaires, may instead use the allowed wattage from NRCC-LTI-06, page 2

D. Declaration of Required Certificates of Installation

Declare by selecting yes for all of the Certificates that will be submitted. (Retain copies and verify forms are complete and signed.)

YES	NO	Compliance Document/Title	
☒	☐	NRCC-LTI-01-E - Must be submitted for all buildings	☐ Field Inspector
☐	☒	NRCC-LTI-02-E - Must be submitted for a lighting control system, or for an Energy Management Control System (EMCS), to be recognized for compliance.	☐ Field Inspector
☐	☒	NRCC-LTI-03-E - Must be submitted for a line-voltage track lighting (magnetic current limiter, or for a supplementary overcurrent protection panel used to energize only line-voltage track lighting, to be recognized for compliance.	☐ Field Inspector
☐	☒	NRCC-LTI-04-E - Must be submitted for two interlocked systems serving an auditorium, a convention center, a conference room, a multipurpose room, or a theater to be recognized for compliance.	☐ Field Inspector
☐	☒	NRCC-LTI-05-E - Must be submitted for a Power Adjustment Factor (PAF) to be recognized for compliance.	☐ Field Inspector
☐	☒	NRCC-LTI-06-E - Must be submitted for additional wattage installed in a video conferencing studio to be recognized for compliance.	☐ Field Inspector

CA Building Energy Efficiency Standards - 2016 Nonresidential Compliance — April 2016

STATE OF CALIFORNIA
INDOOR LIGHTING
CALIFORNIA ENERGY COMMISSION
NRCC-LTI-01-E
CERTIFICATE OF COMPLIANCE
[Page 1 of 6]
Indoor Lighting
Project Name: Valhalla Central Plant — Date Prepared: 1/12/2017

E. Declaration of Required Certificates of Acceptance

Declare by selecting yes for all of the Certificates that will be submitted. (Retain copies and verify forms are complete and signed.)

YES	NO	Compliance Document/Title	
☐	☒	NRCA-LTI-02-A - Must be submitted for occupancy sensors and automatic time switch controls.	☐ Field Inspector
☐	☒	NRCA-LTI-03-A - Must be submitted for automatic daylight controls.	☐ Field Inspector
☐	☒	NRCA-LTI-04-A - Must be submitted for demand responsive lighting controls.	☐ Field Inspector
☐	☒	NRCA-LTI-05-A - Must be submitted for institutional tuning power adjustment factor (PAF).	☐ Field Inspector

F. Separate Lighting Schedule Must Be Filled Out for Conditioned and Unconditioned Spaces. Installed Lighting Power listed on this Lighting Schedule is only for:
☐ CONDITIONED SPACE ☐ UNCONDITIONED SPACE

F. Indoor Lighting Schedule and Field Inspection Energy Checklist

☐ The actual indoor lighting power listed on the next 2 pages includes all installed permanent and planned portable lighting systems.
☐ When Complete Building Method is used for compliance, list each different type of luminaire on separate lines.
☐ When Area Category Method or Tailored Method is used for compliance, list each different type of luminaire by each different function area on separate lines
☐ Also include track lighting in schedule, and submit the track lighting compliance documents (NRCC-LTI-05-E) when line-voltage track lighting is installed.

CA Building Energy Efficiency Standards - 2016 Nonresidential Compliance — April 2016

STATE OF CALIFORNIA
INDOOR LIGHTING
(CEC-NRCC-LTI-01-E (Revised 09/16))
CALIFORNIA ENERGY COMMISSION
NRCC-LTI-01-E
CERTIFICATE OF COMPLIANCE
[Page 4 of 6]
Indoor Lighting
Project Name: Valhalla Central Plant — Date Prepared: 1/12/2017

G. Installed Portable Luminaires in Offices – Exception to Section 140.6(a)

☐ This section shall be filled out ONLY for portable luminaires in offices (As defined in §100.1). All other planned portable luminaires shall be documented on next page of this compliance document.
☐ This section is used to determine if greater than 0.5 watts of portable lighting is planned for any office
☐ Fill out a separate line for each different office. Small offices that are typical (having the same general and portable lighting) may be grouped together. This allowance shall not be traded between offices having different lighting systems.

Office Portable Luminaire Schedule	Office Installed Portable Luminaire Watts							Office Location	Field Inspector	
1	2	3	4	5	6	7	8	9	10	
Complete Luminaire Description (i.e., LED, under cabinet, furniture mounted direct/indirect)	Watts per Luminaire	Number of Luminaires	Installed portable luminaire watts in this office (W22 x W23)	Square feet of this office	Watts per square foot (G24 / G25)	If G26 ≤ 0.5, enter zero; If G26 > 0.5, (G26-0.5)	(G28 x G27)	Identify Office area in which these portable luminaires are installed	Pass	Fail
									☐	☐
									☐	☐
									☐	☐
									☐	☐
									☐	☐
Total installed portable luminaire watts that are greater than 0.5 W/ft² per office								Enter sum total of all pages into NRCC-LTI-01-E, Page 1		

CA Building Energy Efficiency Standards - 2016 Nonresidential Compliance — April 2016

STATE OF CALIFORNIA
INDOOR LIGHTING
(CEC-NRCC-LTI-01-E (Revised 09/16))
CALIFORNIA ENERGY COMMISSION
NRCC-LTI-01-E
CERTIFICATE OF COMPLIANCE
[Page 5 of 6]
Indoor Lighting
Project Name: Valhalla Central Plant — Date Prepared: 1/12/2017

H. Separate Lighting Schedule Must Be Filled Out for Conditioned and Unconditioned Spaces. Installed Lighting Power listed on this Lighting Schedule is only for:
☒ CONDITIONED SPACE ☐ UNCONDITIONED SPACE

I. Indoor Lighting Schedule and Field Inspection Energy Checklist

(C1)	(C2)	(C3)	(C4) Installed Watts: How wattage was determined	(C5) According to Plans	(C6) Number Luminaires	(C7) Total Installed Watts (C4 x C6)	(C8) Location: Primary Function area in which these luminaires are installed	(C9) Field Inspection: Pass	Fail
Name or Item Tag	Complete Luminaire Description (i.e., 3 lamp fluorescent troffer, CFCTR, one dimmable electronic ballast)	Watts per Luminaire							
A.	4' LED STRIP LIGHT	20.0	☐	☒	24	792	Electrical, Mechanical Room	☐	☐
			☐	☐				☐	☐
			☐	☐				☐	☐
			☐	☐				☐	☐
			☐	☐				☐	☐
			☐	☐				☐	☐
			☐	☐				☐	☐
			☐	☐				☐	☐
INSTALLED WATTS PAGE TOTAL						792	Enter sum total of all pages into NRCC-LTI-01-E, Page 2		

CA Building Energy Efficiency Standards - 2016 Nonresidential Compliance — April 2016

STATE OF CALIFORNIA
INDOOR LIGHTING
(CEC-NRCC-LTI-01-E (Revised 09/16))
CALIFORNIA ENERGY COMMISSION
NRCC-LTI-01-E
CERTIFICATE OF COMPLIANCE
[Page 6 of 6]
Indoor Lighting
Project Name: Valhalla Central Plant — Date Prepared: 1/12/2017

DOCUMENTATION AUTHOR'S DECLARATION STATEMENT

I certify that this Certificate of Compliance documents that the building design or system design features meet all applicable requirements and that the information provided is accurate and complete.

Documentation Author Name	Marie Lakey	Documentation Author Signature	
Company	Turpin & Rattan Engineering, Inc.	Signature Date	1/12/2017
Address	4719 Palm Ave.	CEA Certification Identification (if applicable)	
City/State/Zip	La Mesa, Ca 91941	Phone	619-466-6224

RESPONSIBLE PERSON'S DECLARATION STATEMENT

I certify the following under penalty of perjury, under the laws of the State of California:

1. The information provided on this Certificate of Compliance is true and correct.
2. I am eligible under Division 3 of the Business and Professions Code to accept responsibility for the building design or system design identified on this Certificate of Compliance (responsible designer).
3. The energy features and performance specifications, materials, components, and manufactured devices for the building design or system design identified on this Certificate of Compliance conform to the requirements of Title 24, Part 1 and Part 6 of the California Code of Regulations.
4. The building design features or system design features identified on this Certificate of Compliance are consistent with the information provided on other applicable compliance documents, worksheets, calculations, plans and specifications submitted to the enforcement agency for approval with this building permit.
5. I will ensure that a completed signed copy of this Certificate of Compliance shall be made available with the building permit(s) issued for the building, and made available to the enforcement agency for all applicable inspections. I understand that a completed signed copy of this Certificate of Compliance is required to be included with the documentation the builder provides to the building owner at occupancy.

Responsible Designer Name	Marie Lakey	Responsible Designer Signature	
Company	Turpin & Rattan Engineering, Inc.	Date Signed	1/12/2017
Address	4719 Palm Ave.	License	15024
City/State/Zip	La Mesa, CA 91941	Phone	619-466-6224

CA Building Energy Efficiency Standards - 2016 Nonresidential Compliance — April 2016

STATE OF CALIFORNIA
INDOOR LIGHTING – LIGHTING CONTROLS
(CEC-NRCC-LTI-02-E (Revised 09/16))
CALIFORNIA ENERGY COMMISSION
NRCC-LTI-02-E
CERTIFICATE OF COMPLIANCE
[Page 1 of 3]
Indoor Lighting - Lighting Controls
Project Name: Valhalla Central Plant — Date Prepared: 1/12/2017

A. Mandatory Lighting Control Declaration Statements (Indicate if the measure applies by checking yes or no below.)

YES	NO	Control Requirements
☒	☐	Lighting shall be controlled by self-contained lighting control devices which are certified to the Energy Commission according to the Title 20 Appliance Efficiency Regulations in accordance with Section 110.9.
☐	☒	Lighting shall be controlled by a lighting control system or energy management control system in accordance with §110.9. An Installation Certificate shall be submitted in accordance with Section 130.4(b).
☐	☒	One or more Track Lighting Integral Current Limiters shall be installed which have been certified to the Energy Commission in accordance with §110.9 and §130.0. Additionally, an Installation Certificate shall be submitted in accordance with Section 130.4(b).
☐	☐	A Track Lighting Supplementary Overcurrent Protection Panel shall be installed in accordance with Section 110.9 and Section 130.0. Additionally, an Installation Certificate shall be installed in accordance with Section 130.4(b).
☐	☐	All lighting controls and equipment shall comply with the applicable requirements in §110.9 and shall be installed in accordance with the manufacturer's instructions in accordance with Section 130.0.
☐	☐	All luminaires shall be functionally controlled with manually switched ON and OFF lighting controls in accordance with Section 130.1(a).
☒	☐	General lighting shall be separately controlled from all other lighting systems in an area. Floor and wall display, window display, case display, ornamental, and special effects lighting shall each be separately controlled on circuits that are 20 amps or less. When track lighting is used, general, display, ornamental, and special effects lighting shall each be separately controlled, in accordance with Section 130.1(a)4.
☐	☒	The general lighting of any enclosed area 100 square feet or larger, with a connected lighting load that exceeds 1.3 watts per square foot shall meet the multi-level lighting control requirements in accordance with Section 130.1(b).
☐	☐	All installed indoor lighting shall be equipped with controls that meet the applicable Shut-Off control requirements in Section 130.1(c).
☐	☐	Lighting in all Daylit Zones shall be controlled in accordance with the requirements in Section 130.1(d) and daylit zones are shown on the plans.
☐	☐	Lighting power in buildings larger than 10,000 square feet shall be capable of being automatically reduced in response to a Demand Responsive Signal in accordance with Section 130.1(e).
☐	☐	Before an occupancy permit is granted for a newly constructed building or area, or a new lighting system serving a building, area, or site is operated for normal use, indoor lighting controls serving the building, area, or site shall be certified as meeting the Acceptance Requirements for Code Compliance in accordance with Section 130.4 (a). The controls required to meet the Acceptance Requirements include automatic daylight controls, automatic shut-off controls, and demand-responsive controls.

CA Building Energy Efficiency Standards - 2016 Nonresidential Compliance — January 2016

STATE OF CALIFORNIA
INDOOR LIGHTING – LIGHTING CONTROLS
(CEC-NRCC-LTI-02-E (Revised 09/16))
CALIFORNIA ENERGY COMMISSION
NRCC-LTI-02-E
CERTIFICATE OF COMPLIANCE
[Page 2 of 3]
Indoor Lighting - Lighting Controls
Project Name: Valhalla Central Plant — Date Prepared: 1/12/2017

A separate document must be filled out for Conditioned and Unconditioned Spaces. This page is used only for the following:
☐ CONDITIONED SPACES ☒ UNCONDITIONED SPACES

B. Mandatory and Prescriptive Indoor Lighting Control Schedule, PAF Calculation, and Field Inspection Checklist

(C1)	(C2)	(C3)	(C4)	(C5)	(C6)	(C7)	(C8)	(C9)	(C10)	(C11)	(C12)	(C13)	(C14)	(C15)	
Lighting Control Schedule			Standards Complying With (✓ all that apply, or enter "C" if Exempted)							PAF Credit Calculation					
Location in Building	Type/Description of Lighting Control (i.e.: occupancy sensor, automatic time switch, dimmer, automatic daylight, etc...)	% Units	§130.1(a)1	§130.1(a)2	§130.1(a)3	§130.1(a)4	§140.6(a)2	§140.6(a)3		Watts of Controlled Lighting	PAF	Credit (C9 x C11)	✓ If Acceptance Test Required	Field Inspector Pass	Fail
			☐	☐	☐	☐	☐	☐						☐	☐
			☐	☐	☐	☐	☐	☐						☐	☐
			☐	☐	☐	☐	☐	☐						☐	☐
			☐	☐	☐	☐	☐	☐						☐	☐
			☐	☐	☐	☐	☐	☐						☐	☐
			☐	☐	☐	☐	☐	☐						☐	☐
Control Credit PAGE TOTAL (Sum of Column C15)												0			
IF MULTIPLE PAGES ARE USED, ENTER SUM TOTAL OF Control Credit for all pages HERE (Sum of all Column C15)												0			
													Enter Control Credit total into NRCC-LTI-01-E, Page 1.		

1. §130.1(a) = Manual area controls; §130.1(b) = Multi-level; §130.1(c) = Auto Shut-Off; §130.1(d) = Mandatory Daylight; §130.1(e) = Demand Responsive; §140.6(a)2 = Additional lighting controls installed to earn a PAF; §140.6(a)3 = Prescriptive Secondary Side Daylight Controls.
2. Check Table 140.6-A for correct factor. PAFs shall not be traded between conditioned and unconditioned spaces. As a condition to earn a PAF, an Installation Certificate is also required to be filled out, signed, and submitted

CA Building Energy Efficiency Standards - 2016 Nonresidential Compliance — January 2016

PREPARED FOR THE
GROSSMONT UNION HIGH SCHOOL DISTRICT
P.O.BOX 1043
LA MESA, CALIFORNIA

PREPARED BY
PLATT/WHITELAW ARCHITECTS, INC.
4084 30TH STREET
SAN DIEGO, CA (619)640-4820 FAX (619)640-4850

CERTIFICATION STAMP
DIV. OF THE STATE ARCHITECT
OFFICE OF REGULATION SERVICES
04-115630
FILE 49-14
AO ___ FD ___
DATE 04 2717

REGISTERED PROFESSIONAL ENGINEER
MARIE LAKEY
19334
Exp. 12-31-18
ELECTRICAL
STATE OF CALIFORNIA

REGISTERED PROFESSIONAL ENGINEER
MARIE LAKEY
E-019334
ELECTRICAL
STATE OF CALIFORNIA

TITLE 24
CENTRAL PLANT EQUIPMENT UPGRADE
VALHALLA HIGH SCHOOL
1725 HILLSDALE ROAD
EL CAJON, CA 92019

REVISION	DATE

TURPIN & RATTAN
ENGINEERING, INC.
CONSULTING ENGINEERS
4719 PALM AVENUE
LA MESA, CA 91941-5221
619 / 466 / 6324 FAX 466 / 6333
E-MAIL: ENGINEER@TREIEO.COM

TREI PROJECT # 16432.S01

PROJECT NO. FHA #056L10
FILE NAME:
DATE: 4/14/2017 DRAWN: ELIPS CHECKED: CRMR

E-003

SHEET NO. 1 OF SHEETS

J:\16\16432.S01 - GUHSD Valhalla HS Central Plant Upgrade\16432.S01Auxiliary\16432.S01_E-003_TITLE 24.dwg 04/18/2017 10:54

STATE OF CALIFORNIA
INDOOR LIGHTING – LIGHTING CONTROLS
CALIFORNIA ENERGY COMMISSION
CEC-NRCC-LTI-02-E (Revised 08/19)

CERTIFICATE OF COMPLIANCE	NRCC-LTI-02-E
Indoor Lighting - Lighting Controls	(Page 3 of 8)
Project Name: Valhalla Central Plant	Date Prepared: 1/12/2017

DOCUMENTATION AUTHOR'S DECLARATION STATEMENT

1. I certify that this Certificate of Compliance documentation is accurate and complete.

Documentation Author Name:	Marie Lakey	Documentation Author Signature:	
Company:	Turpin & Rattan Engineering, Inc.	Signature Date:	1/12/2017
Address:	4715 Palm Ave.	CEA Certification Identification (If applicable):	
City/State/Zip:	La Mesa, Ca 91941	Phone:	619-466-6224

RESPONSIBLE PERSON'S DECLARATION STATEMENT

I certify the following under penalty of perjury, under the laws of the State of California:

1. The information provided on this Certificate of Compliance is true and correct.
2. I am eligible under Division 3 of the Business and Professions Code to accept responsibility for the building design or system design identified on this Certificate of Compliance (responsible designer).
3. The energy features and performance specifications, materials, components, and manufactured devices for the building design or system design identified on this Certificate of Compliance conform to the requirements of Title 24, Part 1 and Part 6 of the California Code of Regulations.
4. The building design features or system design features identified on this Certificate of Compliance are consistent with the information provided on other applicable compliance documents, worksheets, calculations, plans and specifications submitted to the enforcement agency for approval with this building permit application.
5. I will ensure that a completed signed copy of this Certificate of Compliance shall be made available with the building permit(s) issued for the building, and made available to the enforcement agency for all applicable inspections. I understand that a completed signed copy of this Certificate of Compliance is required to be included with the documentation the builder provides to the building owner at occupancy.

Responsible Designer Name:	Marie Lakey	Responsible Designer Signature:	
Company:	Turpin & Rattan Engineering, Inc.	Date Signed:	1/12/2017
Address:	4715 Palm Ave.	License:	16324
City/State/Zip:	La Mesa, CA 91941	Phone:	619-466-6224

CA Building Energy Efficiency Standards - 2016 Nonresidential Compliance — January 2016

STATE OF CALIFORNIA
INDOOR LIGHTING POWER ALLOWANCE
CALIFORNIA ENERGY COMMISSION
CEC-NRCC-LTI-03-E (Revised 08/19)

CERTIFICATE OF COMPLIANCE	NRCC-LTI-03-E
Certificate of Compliance - Indoor Lighting Power Allowance	(Page 1 of 4)
Project Name: Valhalla Central Plant	Date Prepared: 1/12/2017

A separate page must be filled out for Conditioned and Unconditioned Spaces. This page is only for:
☐ CONDITIONED spaces ☐ UNCONDITIONED spaces

A. SUMMARY TOTALS OF LIGHTING POWER ALLOWANCES

☐ If using Complete Building Method for compliance, use only the total in column (a) as total allowed building watts.
☐ If using Area Category Method, Tailored Method, or a combination of Area Category and Tailored Method for compliance, use only the total in column (b) as the total allowed building watts

	(a)	(b)
(1) Complete Building Method Allowed Watts. Documented in section B of NRCC-LTI-03-E (below on this page)		
(2) Area Category Method Allowed Watts. Documented in section C-C of NRCC-LTI-03-E (below on this page)		623
(3) Tailored Method Allowed Watts. Documented in section A of NRCC-LTI-03-E		0
TOTAL ALLOWED BUILDING WATTS. Enter number here (smaller of: NRCC-LTI-03, Page 2, Row 3		623

☐ Check here if building contains both conditioned and unconditioned areas.

B. COMPLETE BUILDING METHOD LIGHTING POWER ALLOWANCE

(1)	(2)		(3)		(4)
TYPE OF BUILDING (From 140.6-B Table 140.6-B)	WATTS PER ft²	X	COMPLETE BLDG. AREA	=	ALLOWED WATTS
		Total Area:			
Total Watts. Enter Total Watts into section A, row 1 (Above on this page)					

C-C AREA CATEGORY METHOD TOTAL LIGHTING POWER ALLOWANCES

	Watts
Total (from section C-1)	623
Total (from section C-2)	0
Total Watts. Enter Total Watts into section A, row 2 (Above on this page)	623
For Alternative Only - Reduced lighting power option (Total Allowed Watts x 0.80). Enter this value into section A, row 3 if using this option.	

CA Building Energy Efficiency Standards - 2016 Nonresidential Compliance — April 2016

STATE OF CALIFORNIA
INDOOR LIGHTING POWER ALLOWANCE
CALIFORNIA ENERGY COMMISSION
CEC-NRCC-LTI-03-E (Revised 08/19)

CERTIFICATE OF COMPLIANCE	NRCC-LTI-03-E
Certificate of Compliance - Indoor Lighting Power Allowance	(Page 2 of 4)
Project Name: Valhalla Central Plant	Date Prepared: 1/12/2017

A separate page must be filled out for Conditioned and Unconditioned Spaces. This page is only for:
☐ CONDITIONED spaces ☑ UNCONDITIONED spaces

C-2 AREA CATEGORY METHOD GENERAL LIGHTING POWER ALLOWANCE

☐ Do not include portable lighting for offices. Portable lighting for offices shall be documented only in Section B of NRCC-LTI-03-E.
☐ Separately list lighting for each primary function area as defined in 5101.1 of the Standards.

(1)		(2)		(3)		(4)
AREA CATEGORY (From 140.6-B Table 140.6-C)		WATTS PER ft²	X	AREA (ft²)	=	ALLOWED WATTS
Location In Building	Primary Function Area per Table 140.6-C					
Zone 1	Electrical, Mechanical Room	0.55		1,515		833
				TOTALS	1,515	
Enter sum total Area Category allowed watts into section C-1 of NRCC-LTI-03-E (this compliance document)						833

WATTS

CA Building Energy Efficiency Standards - 2016 Nonresidential Compliance — April 2016

STATE OF CALIFORNIA
INDOOR LIGHTING POWER ALLOWANCE
CALIFORNIA ENERGY COMMISSION
CEC-NRCC-LTI-03-E (Revised 08/19)

CERTIFICATE OF COMPLIANCE	NRCC-LTI-03-E
Certificate of Compliance - Indoor Lighting Power Allowance	(Page 3 of 4)
Project Name: Valhalla Central Plant	Date Prepared: 1/12/2017

A separate page must be filled out for Conditioned and Unconditioned Spaces. This page is only for:
☐ CONDITIONED spaces ☑ UNCONDITIONED spaces

C-3 AREA CATEGORY METHOD ADDITIONAL LIGHTING WATTAGE ALLOWANCE (from Table 140.6-C Footnotes)

(1)	(2)	(3) *	(4)	(5)	(6)	(7)
Primary Function	Sq ft or Linear ft [1]	Watts Allowed	Wattage Allowance ((2) x (3))	Description(s) and Quantity of Special Luminaire Types in each Primary Function Area	Total Design Watts *	ALLOWED WATTS Smaller of (4) or (6)

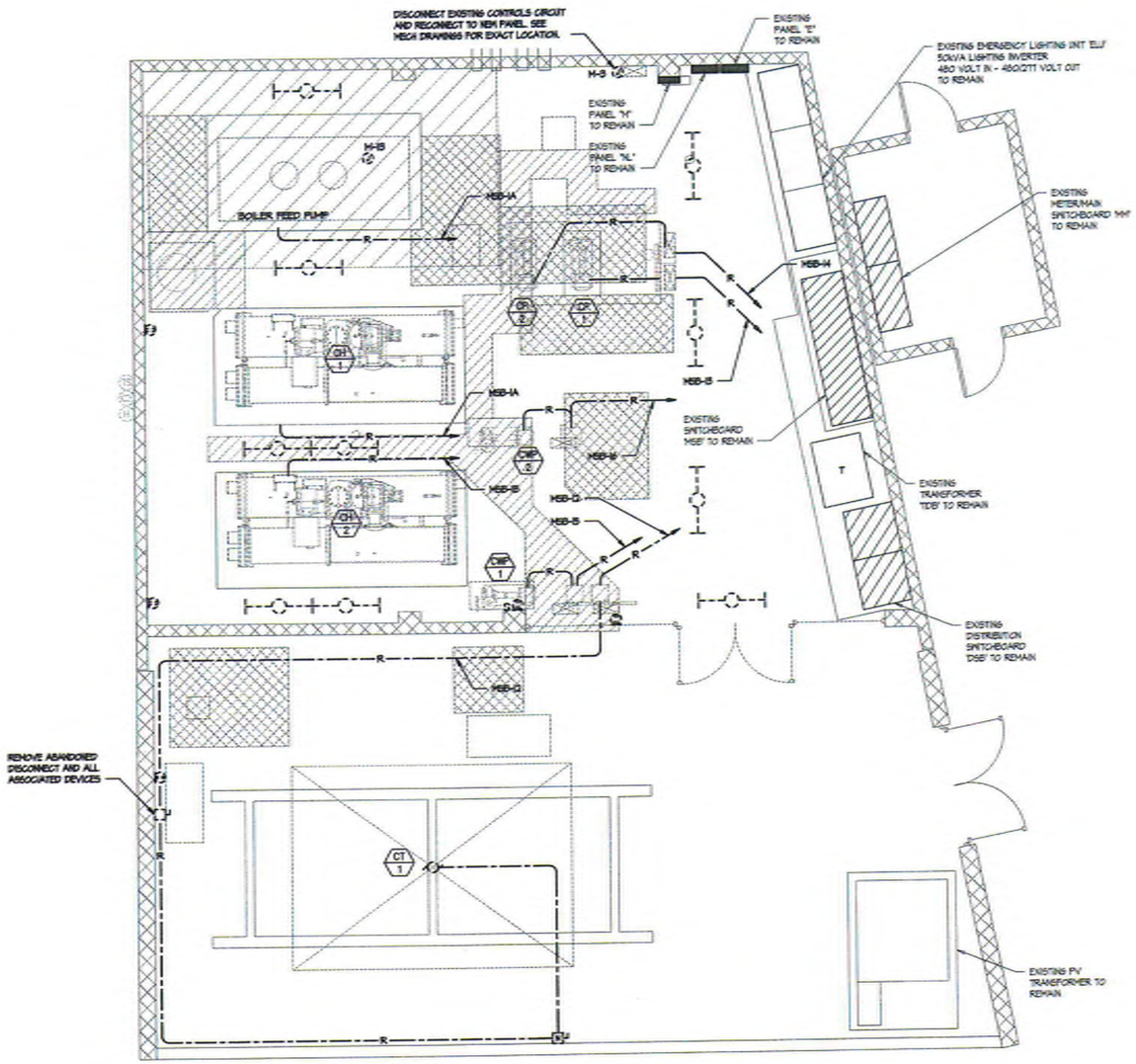

SHEET NOTE

1. FOR ALL DEVICES AND FEEDERS SHOWN TO BE REMOVED, DEMO ALL CONDUIT/WIRE AND ASSOCIATED DEVICES BACK TO SWITCHBOARD OR PANELBOARD.

ELECTRICAL - DEMOLITION FLOOR PLAN

SCALE: 1/4" = 1'-0"

NORTH

0 2' 4' 8' 12'
1/4" = 1'-0"

TURPIN & RATTAN ENGINEERING, INC.
CONSULTING ENGINEERS
4519 PALM AVENUE
LA MESA, CA 91941-5221
619 / 466 / 6224 FAX 466 / 6233
E-MAIL: ENGINEER@TREIEO.COM

TREI PROJECT # 16432.S01

PREPARED FOR THE
GROSSMONT UNION HIGH SCHOOL DISTRICT
P.O.BOX 1043
LA MESA, CALIFORNIA

PREPARED BY
PLATT/WHITELAW ARCHITECTS, INC.
4024 30TH STREET
SAN DIEGO, CA (619)549-4920 FAX (619)549-4950

APPROVAL STAMP
DIV. OF THE STATE ARCHITECT
OFFICE OF REGULATION SERVICES
04-115930
FILE 52-14
AC.
DATE 02/17/17

ELECTRICAL - DEMOLITION FLOOR PLAN
CENTRAL PLANT EQUIPMENT UPGRADE
VALHALLA HIGH SCHOOL
1725 HILLSDALE ROAD
EL CAJON, CA 92019

REVISION	DATE

PROJECT NO. FMA #056130

FILE NAME:

DATE: 4/14/2017 DRAWN: EL/PS CHECKED: GR/MR

E-101

SHEET NO. 1 OF SHEETS

J:\16\16432.S01 - GUHSD Valhalla HS Central Plant Upgrade\16432.00\Arcadian\16432.00_E-101_ELECTRICAL - DEMOLITION FLOOR PLAN.dwg 04/18/2017 10:58

All lighting mounted @ ceiling

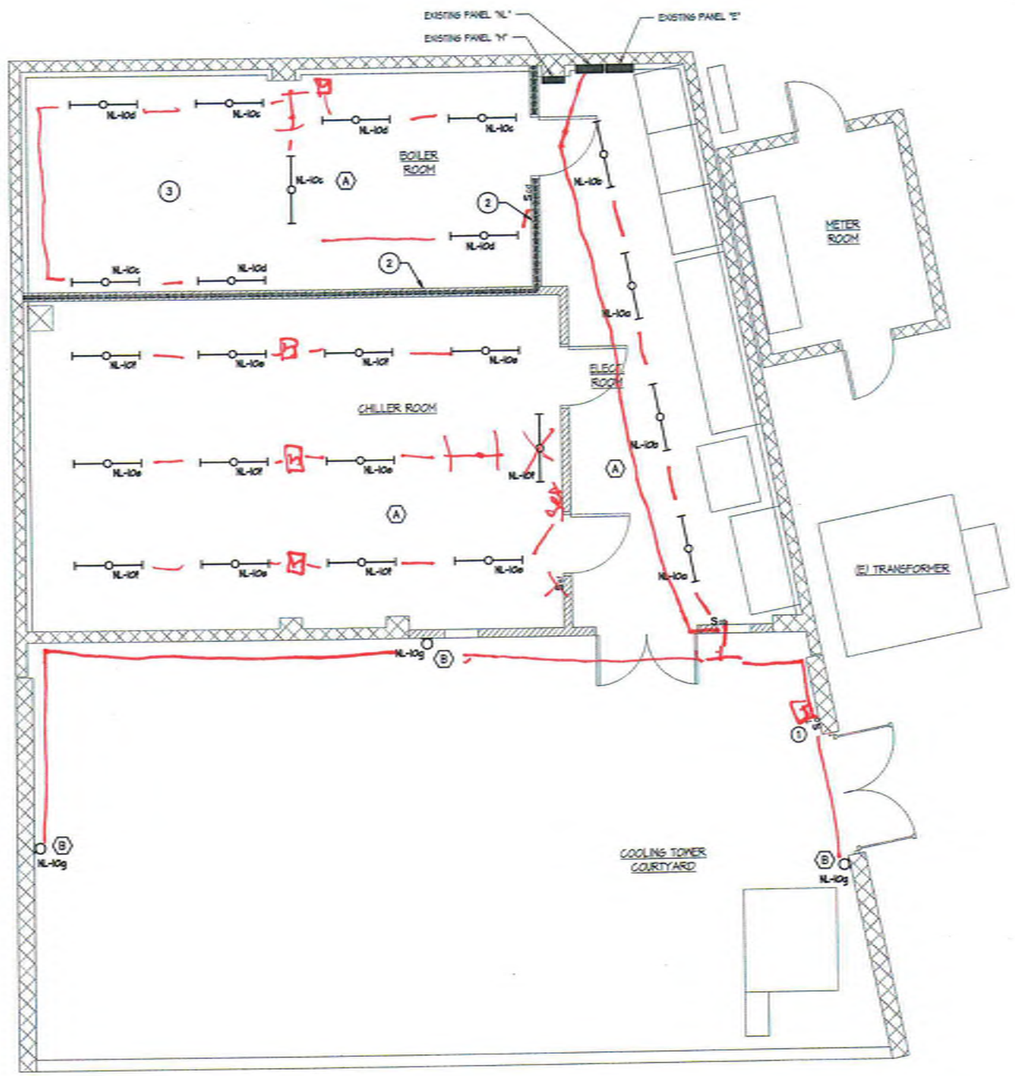

KEYNOTES

1. MECHANICAL SPRING POWD 2 HOUR TIMER IN WEATHERPROOF SURFACE MOUNT ENCLOSURE FOR CONTROL OF EXTERIOR LIGHTS.
2. 1-HR RATED WALL. SEE DETAIL 2/E-601 FOR ALL CONDUIT PENETRATIONS OF THIS WALL.
3. 1-HR RATED GYP. BOARD CEILING IN THIS ROOM. SEE DETAIL 2/E-601 FOR ALL CONDUIT PENETRATIONS OF THIS CEILING.

SHEET NOTE

1. EXTERIOR LIGHTING IS LOCATED IN AN INDUSTRIAL AREA AND IS FOR USE DURING NIGHT MAINTENANCE ONLY. PER TITLE 24 2014-6 BUILDING ENERGY EFFICIENCY STANDARDS SECTION 140.7 THIS LIGHTING IS EXEMPT.

ELECTRICAL - LIGHTING FLOOR PLAN

SCALE: 1/4" = 1'-0"

0 2' 4' 8' 12'

1/4" = 1'-0"

TURPIN & RATTAN ENGINEERING, INC.
CONSULTING ENGINEERS
4719 PALM AVENUE
LA MESA, CA 91941-5221
619 / 466 / 6224 FAX 465 / 6233
E-MAIL: ENGINEER@TRCEO.COM

TREI PROJECT # 16432.S01

PREPARED FOR THE
GROSSMONT UNION HIGH SCHOOL DISTRICT
P.O.BOX 1043
LA MESA, CALIFORNIA

PREPARED BY
PLATT/WHITELAW ARCHITECTS, INC.
4094 30TH STREET
SAN DIEGO, CA (619)546-4380 FAX (619)546-4380

CERTIFICATION STAMP DIV. OF THE STATE ARCHITECT OFFICE OF REGULATION SERVICES
04-115030
FILE 10/144
AC.
DATE 042717

ELECTRICAL - LIGHTING FLOOR PLAN

CENTRAL PLANT EQUIPMENT UPGRADE

VALHALLA HIGH SCHOOL
1725 HILLSDALE ROAD
EL CAJON, CA 92019

REVISION	DATE

PROJECT NO. PWA #056110

FILE NAME:

DATE: 4/14/2017 DRAWN: EL/PS CHECKED: CR/HR

E-201

SHEET NO. 1 OF SHEETS

A:\16\16432.S01 - GUHSD Valhalla HS Central Plant Upgrade\16432.00\Acadenv\16432.00_E-201_ELECTRICAL - LIGHTING FLOOR PLAN.dwg 04/18/2017 20:00

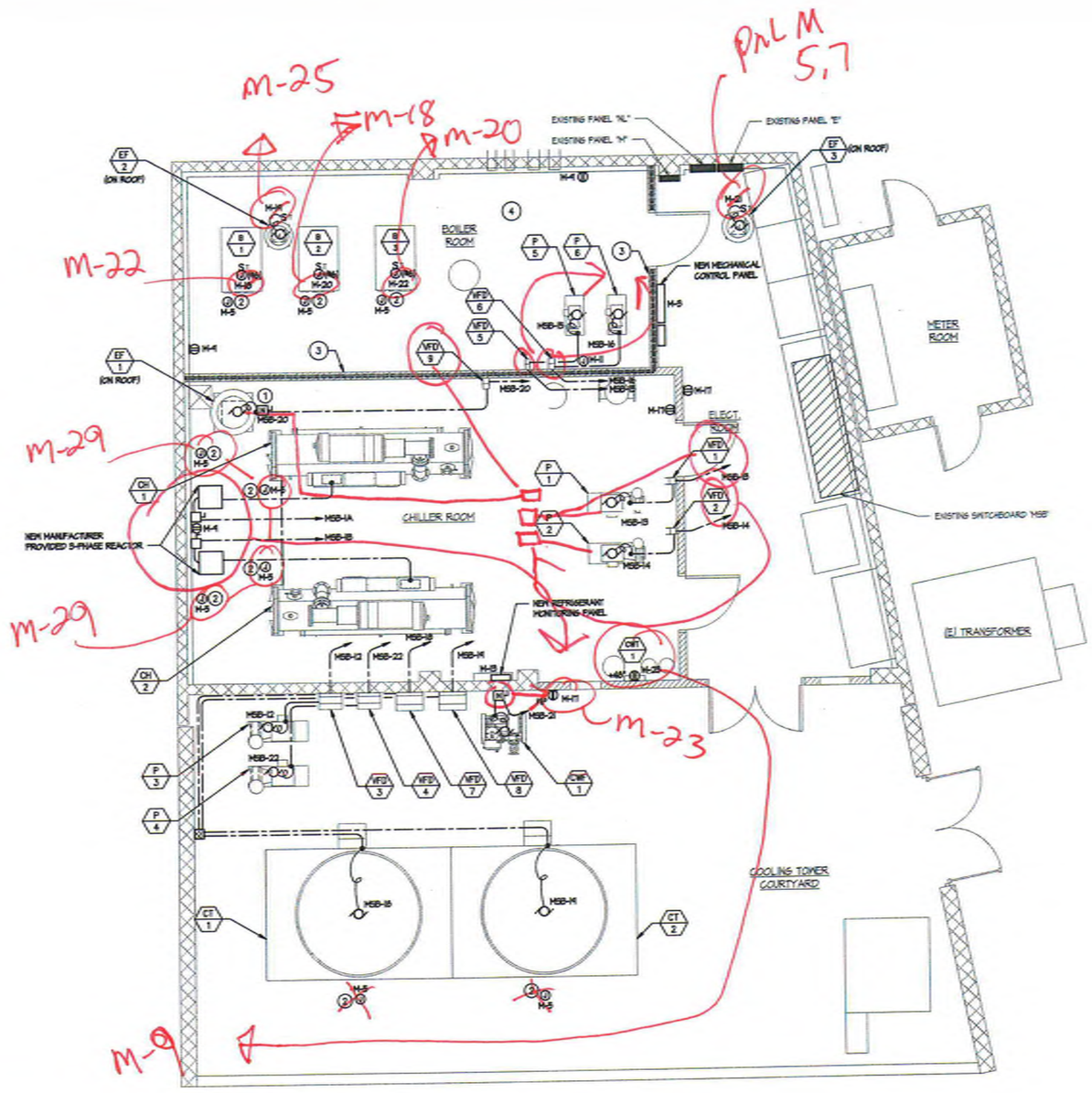

KEYNOTES

1. PROVIDE WEATHERPROOF DISCONNECT AT EXHAUST FAN. VERIFY EXACT MOUNTING LOCATION WITH EQUIPMENT SUBMITTAL.
2. PROVIDE 120V CONNECTION TO MECHANICAL CONTROL VALVE.
3. 1-HR RATED WALL. SEE DETAIL 2/E-601 FOR ALL CONDUIT PENETRATIONS OF THIS WALL.
4. 1-HR RATED 6'1'F. BOARD CEILING IN THIS ROOM. SEE DETAIL 2/E-601 FOR ALL CONDUIT PENETRATIONS OF THIS CEILING.

SHEET NOTES

1. VARIABLE FREQUENCY DRIVES SHOWN ARE FURNISHED AND MOUNTED BY MECHANICAL. INSTALLATION AND ALL CONNECTIONS BY ELECTRICAL CONTRACTOR.
2. VERIFY POWER POINT OF CONNECTION TO MECHANICAL EQUIPMENT WITH SHOP DRAWINGS PRIOR TO INSTALLATION.

ELECTRICAL - POWER FLOOR PLAN

SCALE: 1/4" = 1'-0"

0 2' 4' 8' 12'
1/4" = 1'-0"

PREPARED FOR THE
GROSSMONT UNION HIGH SCHOOL DISTRICT
P.O.BOX 1048
LA MESA, CALIFORNIA

PREPARED BY
PLATT/WHITELAW ARCHITECTS, INC.
4094 30TH STREET
SAN DIEGO, CA (619)546-4326 FAX (619)546-4360

TURPIN & RATTAN ENGINEERING, INC.
CONSULTING ENGINEERS
4319 PALM AVENUE
LA MESA, CA 91941-5321
619 / 466 / 6224 FAX 466 / 6333
E-MAIL: ENGINEER@TREINO.COM

TREI PROJECT # 16432.501

ENVIRONMENTAL DIV. OF THE STATE ARCHITECT OFFICE OF REGULATION SERVICES
04-115030
FILE 43-114
AC.
DATE 04/27/17

REGISTERED PROFESSIONAL ENGINEER
ELECTRICAL
STATE OF CALIFORNIA

REGISTERED ARCHITECT
STATE OF CALIFORNIA

ELECTRICAL - POWER FLOOR PLAN
CENTRAL PLANT EQUIPMENT UPGRADE

VALHALLA HIGH SCHOOL
1725 HILLSDALE ROAD
EL CAJON, CA 92019

REVISION	DATE

PROJECT NO. FMA #056110
FILE NAME:
DATE: 4/14/2017 DRAWN: EL/PS CHECKED: CR/MR

E-202

SHEET NO. : OF SHEETS

J:\16\16432.501 - GUHSD Valhalla HS Central Plant Upgrade\16432.00\Autoplan\16432.00_E-202_ELECTRICAL - POWER FLOOR PLAN.dwg 04/18/2017 20:02

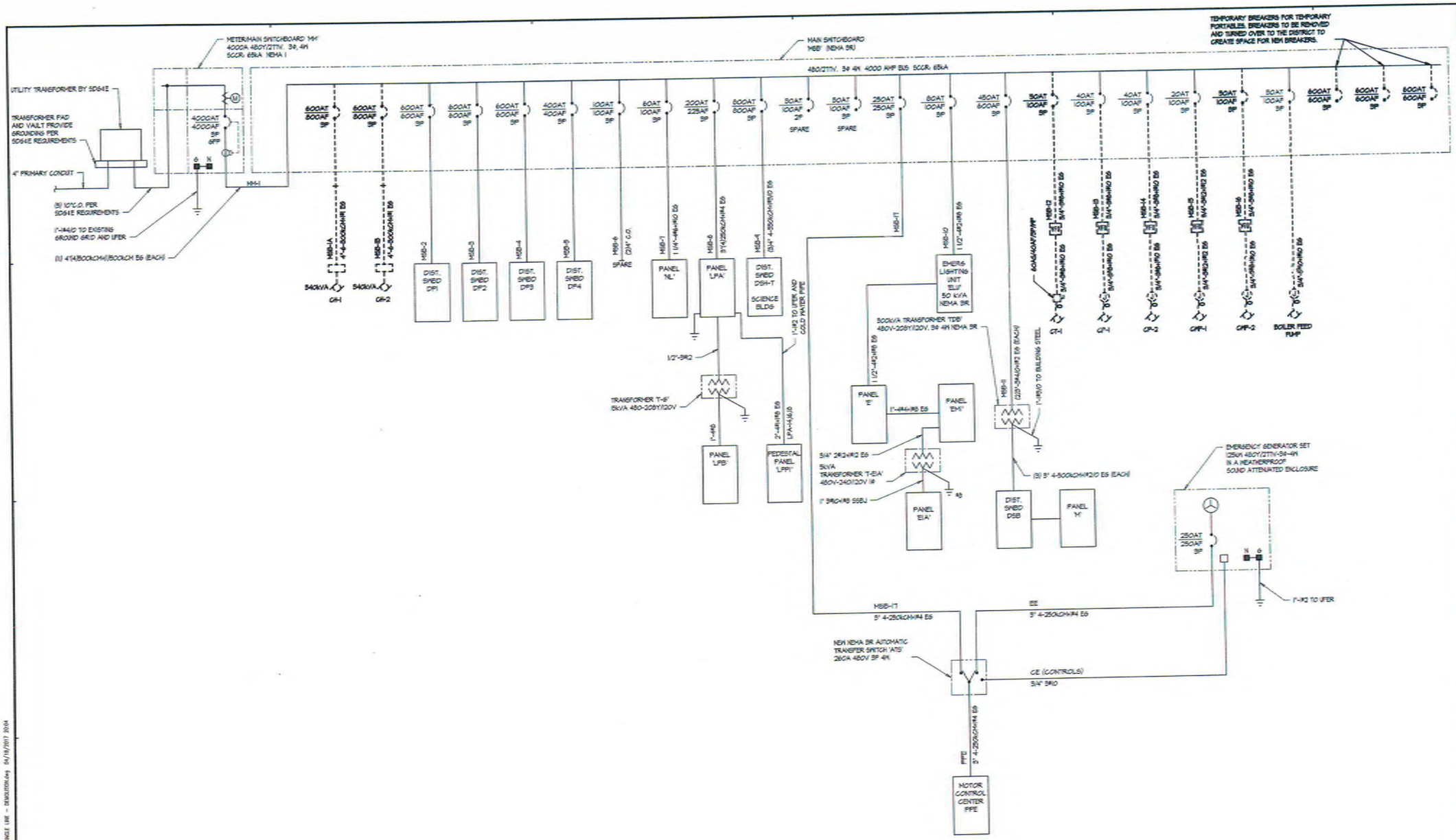

SINGLE LINE - DEMOLITION

NO SCALE

TURPIN & RATTAN ENGINEERING, INC.
CONSULTING ENGINEERS
4719 PALM AVENUE
LA MESA, CA 91941-5221
619 / 466 / 5224 FAX 466 / 6233
E-MAIL: ENGINEER@TREDEO.COM

TREI PROJECT # 16432.501

PREPARED FOR THE
GROSSMONT UNION HIGH SCHOOL DISTRICT
P.O.BOX 1043
LA MESA, CALIFORNIA

PREPARED BY:
PLATT/WHITELAW ARCHITECTS, INC.
4094 30TH STREET
SAN DIEGO, CA (619)546-4526 FAX (619)546-4550

ENVIRONMENTAL STAMP
DIV OF THE STATE ARCHITECT
OFFICE OF REGULATION SERVICES
04-119000
FILE #37-44
A.C. D.S.
DATE 04.27.17

SINGLE LINE - DEMOLITION

CENTRAL PLANT EQUIPMENT UPGRADE

VALHALLA HIGH SCHOOL
1725 HILLSDALE ROAD
EL CAJON, CA 92019

REVISION	DATE

PROJECT NO. FNA #036.110

FILE NAME:

DATE: 4/14/2017 DRAWN: EL/PS CHECKED: CR/MR

E-501

SHEET NO. OF SHEETS

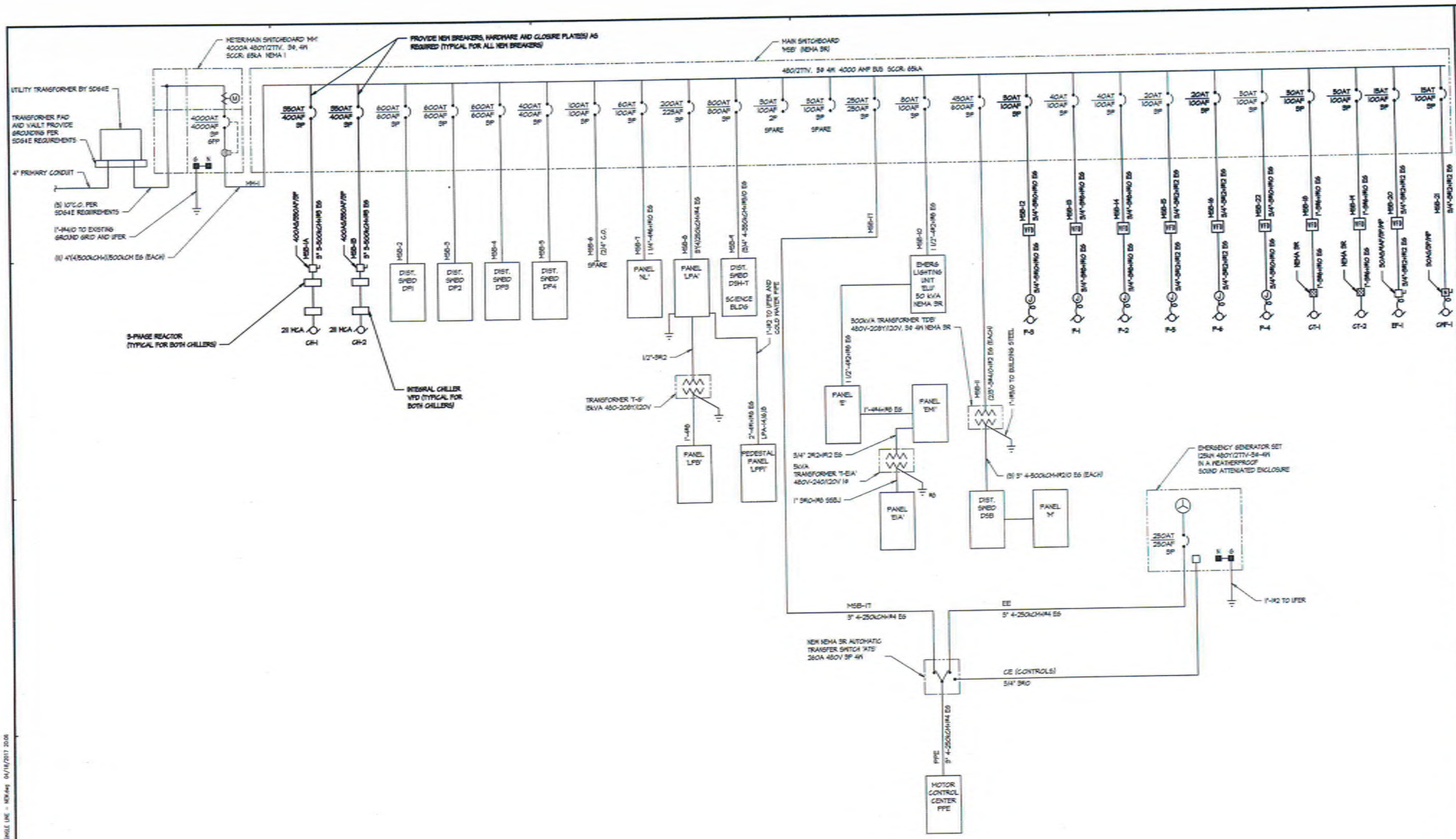

SINGLE LINE - NEW
NO SCALE

TURPIN & RATTAN ENGINEERING, INC.
CONSULTING ENGINEERS
4519 PALM AVENUE
LA MESA, CA 91941-5221
619 / 466 / 6224 FAX 466 / 6233
E-MAIL: ENGINEER@TREIEO.COM

TREI PROJECT # 16432.501

PREPARED FOR THE
GROSSMONT UNION HIGH SCHOOL DISTRICT
P.O.BOX 1043
LA MESA, CALIFORNIA

PREPARED BY
PLATT/WHITELAW ARCHITECTS, INC.
4094 30TH STREET
SAN DIEGO, CA (619)546-4350 FAX (619)546-4350

IDENTIFICATION STAMP
DIV. OF THE STATE ARCHITECT
OFFICE OF REGULATION SERVICES
04-115930
FILE 101-H
NO. 042717
DATE

SINGLE LINE - NEW

CENTRAL PLANT EQUIPMENT UPGRADE

VALHALLA HIGH SCHOOL
1725 HILLSDALE ROAD
EL CAJON, CA 92019

REVISION	DATE

PROJECT NO. PWA #056L10
FILE NAME:
DATE: 4/14/2017 DRAWN: EL/PS CHECKED: CR/MR

E-502

SHEET NO. 1 OF SHEETS

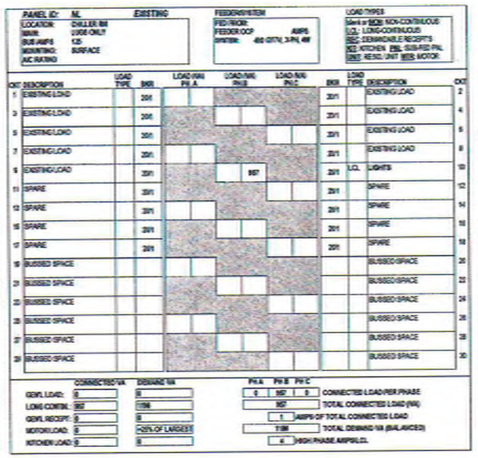

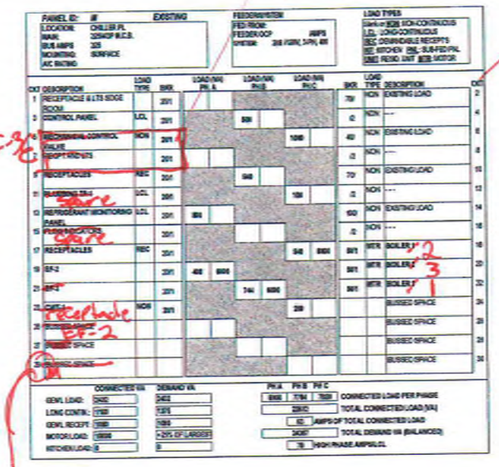

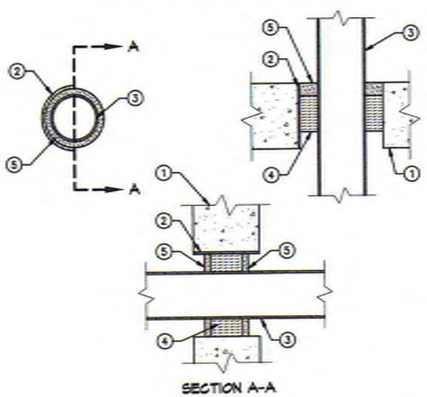

KEYNOTES

1. FLOOR OR WALL ASSEMBLY - EXISTING CMU BLOCK WALL. MAX DIAM OF OPENING IS 6 IN. SEE CONCRETE BLOCKS (CAZT) CATEGORY IN THE FIRE RESISTANCE DIRECTORY FOR NAMES OF MANUFACTURERS.
2. METALLIC SLEEVE (OPTIONAL) - NOM 6 IN. DIAM (OR SMALLER) ELECTRICAL METALLIC TUBING, STEEL CONDUIT OR CAST IRON PIPE CAST OR GROUTED INTO FLOOR OR WALL ASSEMBLY, FLUSH WITH FLOOR OR WALL SURFACES.
3. THROUGH PENETRANTS - ONE METALLIC CONDUIT TO BE CENTERED WITHIN THE FIRESTOP SYSTEM. A NOM ANNULAR SPACE OF 3/4 IN. IS REQUIRED WITHIN THE FIRESTOP SYSTEM. CONDUIT TO BE RIGIDLY SUPPORTED ON BOTH SIDES OF FLOOR OR WALL ASSEMBLY. THE FOLLOWING TYPES AND SIZES OF CONDUITS MAY BE USED:
   A. CONDUIT - NOM 4 IN. (OR SMALLER) DIAM STEEL ELECTRICAL METALLIC TUBING OR STEEL CONDUIT.
4. PACKING MATERIAL - MIN 5 IN. THICKNESS OF MIN 4 PCF MINERAL WOOL BATT INSULATION FIRMLY PACKED INTO OPENING AS A PERMANENT FORM. PACKING MATERIAL TO BE RECESSED FROM TOP SURFACE OF FLOOR AS REQUIRED TO ACCOMMODATE THE REQUIRED THICKNESS OF FILL MATERIAL. PACKING MATERIAL TO BE CENTERED IN WALLS MID DEPTH AND RECESSED TO ALLOW FOR INSTALLATION OF FILL MATERIAL.
5. FILL/VOID OR CAVITY MATERIAL* - SEALANT - MIN 1/2 IN. THICKNESS OF FILL MATERIAL APPLIED WITHIN THE ANNULUS, FLUSH WITH TOP SURFACE OF FLOOR. IN WALLS, FILL MATERIAL TO BE APPLIED ON EACH SIDE OF PACKING MATERIAL. MINNESOTA MINING 4 MF6 CO - TYPE FB-2000 OR FB-2000+ (FLOORS ONLY). (NOTE: L RATINGS APPLY ONLY WHEN FB-2000+ IS USED.)

*BEARING THE UL CLASSIFICATION MARKING

CONCRETE PENETRATION DETAILS

NO SCALE

1 / E-601

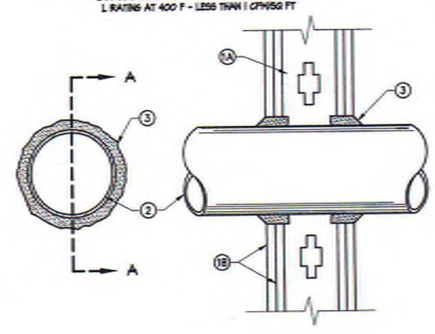

KEYNOTES

1. WALL ASSEMBLY - THE 1, 2, 3 OR 4 HR FIRE-RATED GYPSUM WALLBOARD/STUD WALL ASSEMBLY SHALL BE CONSTRUCTED OF THE MATERIALS AND IN THE MANNER DESCRIBED IN THE INDIVIDUAL U300 OR U400 SERIES WALL OR PARTITION DESIGNS IN THE UL FIRE RESISTANCE DIRECTORY AND SHALL INCLUDE THE FOLLOWING CONSTRUCTION FEATURES:

   A. STUDS - WALL FRAMING MAY CONSIST OF EITHER WOOD STUDS (MAX 2 HR FIRE RATED ASSEMBLIES) OR STEEL CHANNEL STUDS. WOOD STUDS TO CONSIST OF NOM 2 BY 4 IN. (51 BY 102 MM) LUMBER SPACED 16 IN. (406 MM) OC WITH NOM 2 BY 4 IN. (51 BY 102 MM) LUMBER END PLATES AND CROSS BRACES. STEEL STUDS TO BE MIN 3-5/8 IN. (92 MM) WIDE BY 1-3/8 IN. (35 MM) DEEP CHANNELS SPACED MAX 24 IN. (610 MM) OC.

   B. GYPSUM BOARD* - NOM 1/2 OR 5/8 IN. (13 OR 16 MM) THICK, 4 FT. (122 CM) WIDE WITH SQUARE OR TAPERED EDGES. THE GYPSUM WALLBOARD TYPE, THICKNESS, NUMBER OF LAYERS, FASTENER TYPE AND SHEET ORIENTATION SHALL BE AS SPECIFIED IN THE INDIVIDUAL U300 OR U400 SERIES DESIGN IN THE UL FIRE RESISTANCE DIRECTORY. MAX DIAM OF OPENING IS 26 IN. (660 MM).

[illegible]	F RATING HR	T RATING HR
[illegible]	1 or 2	0 or 2
[illegible]	3 or 4	3 or 4
[illegible]	1 or 2	0
[illegible]	3 or 4	0
[illegible]	1 or 2	0

3M COMPANY - CP 25WB+ CAULK OR FB-3000 WT SEALANT.

*BEARING THE UL CLASSIFICATION MARKING

2. THROUGH PENETRANT - ONE CONDUIT INSTALLED EITHER CONCENTRICALLY OR ECCENTRICALLY WITHIN THE FIRESTOP SYSTEM. THE ANNULAR SPACE BETWEEN CONDUIT AND PERIPHERY OF OPENING SHALL BE MIN OF 0 IN. (0 MM) (POINT CONTACT) TO MAX 2 IN. (51 MM). CONDUIT TO BE RIGIDLY SUPPORTED ON BOTH SIDES OF WALL ASSEMBLY. THE FOLLOWING TYPES AND SIZES OF CONDUITS MAY BE USED:
   A. CONDUIT - NOM 6 IN. (152 MM) DIAM (OR SMALLER) STEEL CONDUIT OR NOM 4 IN. (102 MM) DIAM (OR SMALLER) STEEL ELECTRICAL METALLIC TUBING.
3. FILL/VOID OR CAVITY MATERIAL* - CAULK OR SEALANT - MIN 5/8, 1-1/4, 1-7/8 AND 2-1/2 IN. (16, 32, 48 AND 64 MM) THICKNESS OF CAULK FOR 1, 2, 3 AND 4 HR RATED ASSEMBLIES, RESPECTIVELY, APPLIED WITHIN ANNULUS, FLUSH WITH BOTH SURFACES OF WALL. MIN 1/4 IN. (6 MM) DIAM BEAD OF CAULK APPLIED TO GYPSUM BOARD/PENETRANT INTERFACE AT POINT CONTACT LOCATION ON BOTH SIDES OF WALL.
   THE HOURLY F RATING OF THE FIRESTOP SYSTEM IS DEPENDENT UPON THE HOURLY FIRE RATING OF THE WALL ASSEMBLY IN WHICH IT IS INSTALLED, AS SHOWN IN THE FOLLOWING TABLE.
   THE HOURLY T RATING OF THE FIRESTOP SYSTEM IS DEPENDENT UPON THE TYPE OR SIZE OF THE PIPE OR CONDUIT AND THE HOURLY FIRE RATING OF THE WALL ASSEMBLY IN WHICH IT IS INSTALLED, AS TABULATED BELOW.

GYPSUM BOARD WALL/CEILING CONDUIT PENETRATION DETAIL

NO SCALE

2 / E-601

TURPIN & RATTAN ENGINEERING, INC.
CONSULTING ENGINEERS
4719 PALM AVENUE
LA MESA, CA 91941-5221
619 / 466 / 6224 FAX 466 / 6233
E-MAIL: ENGINEER@TREEO.COM
TREI PROJECT # 16432.S01

PREPARED FOR THE
GROSSMONT UNION HIGH SCHOOL DISTRICT
P.O.BOX 1043
LA MESA, CALIFORNIA

PREPARED BY
PLATT/WHITELAW ARCHITECTS, INC.
4094 50TH STREET
SAN DIEGO, CA (619)546-4950 FAX (619)546-4950

DIVISION OF STATE ARCHITECT
OFFICE OF REGULATION SERVICES
04-115930
FILE #2114
AC. ___ FLS. ___
DATE 04.27.17

REGISTERED PROFESSIONAL ENGINEER
JAMES E. TURPIN
No. 19334
Exp. 12-31-18
ELECTRICAL
STATE OF CALIFORNIA

REGISTERED ARCHITECT
JAMES E. PLATT
No. 6303
STATE OF CALIFORNIA

PANEL SCHEDULES

CENTRAL PLANT EQUIPMENT UPGRADE

VALHALLA HIGH SCHOOL
1725 HILLSDALE ROAD
EL CAJON, CA 92019

REVISION	DATE

PROJECT NO. FMA #056130

FILE NAME:

DATE: 4/14/2017 DRAWN: EL/PS CHECKED: CR/MR

E-601

SHEET NO. 1 OF SHEETS

J:\15\16432.S01 - GUHSD Valhalla HS Central Plant Upgrade\16432.00_Ecodging\16432.00_E-601_PANEL SCHEDULES.dwg 04/18/2017 20:09

FIRE ALARM SYSTEM NOTES

1. THE FIRE ALARM SYSTEM SHOWN ON THESE DRAWINGS SHALL BE USED FOR CONSTRUCTION.

   APPLICABLE CODE FOR FIRE ALARM:
   2016 CALIFORNIA BUILDING CODE, TITLE 24 PART 2
   2016 CALIFORNIA ELECTRICAL CODE, TITLE 24 PART 3
   2016 NFPA 72 WITH CSFM AMENDMENTS
   2016 CALIFORNIA FIRE CODE, TITLE 24 PART 9.

2. AUDIBLE DEVICES SHALL BE SIMILAR TO WHAT IS EXISTING ON CAMPUS. AUDIBILITY SHALL BE A MINIMUM OF 15 DB ABOVE AMBIENT NOISE, BUT NOT LESS THAN 75 DB AT 10'-0"

3. THESE DRAWINGS SHALL SERVE AS SHOP DRAWINGS OF THE FIRE ALARM SYSTEM AND HAVE BEEN SUBMITTED TO THE DSA-ORS FOR REVIEW AND APPROVAL.

4. THE LOCATION OF AUTOMATIC DETECTORS, MANUAL STATIONS AND OTHER FIRE ALARM EQUIPMENT AND DEVICES, AS SHOWN ON PLAN, ARE FOR CONSTRUCTION.

5. THE FIRE ALARM SYSTEM SHALL CONFORM TO ARTICLE 760 OF CALIFORNIA ELECTRICAL CODE. INSTALLATION OF THE FIRE ALARM SYSTEM SHALL NOT BE STARTED UNTIL DETAILED PLANS AND SPECIFICATIONS, INCLUDING CALIFORNIA STATE FIRE MARSHAL LISTING NUMBERS FOR EACH COMPONENT.

6. THE FOLLOWING INFORMATION IS INCLUDED IN THESE PLANS.
   a. IDENTIFICATION OF TYPE OF WIRING USED
   b. FLOOR PLAN SHOWING NEW FIRE ALARM DEVICES.
   c. RISER DIAGRAM AND POINT TO POINT DIAGRAM
   d. CSFM LISTING SHEET SHOWING EXP. DATE FOR ALL COMPONENTS
   e. MFR'S SPEC SHEET ON ALL FIRE ALARM EQUIPMENT
   f. BATTERY AND VOLTAGE DROP CALCULATIONS FOR EACH PANEL WITH A BATTERY
   g. SYMBOLS OF ALL FIRE ALARM DEVICES INSTALLED
   h. ELEVATION DETAIL OF MANUAL STATION, STROBES, HORN/STROBES, AND HORNS
   i. SYSTEM OPERATION MATRIX- EFFECT OF THE OPERATION OF EACH FIRE ALARM DEVICE IS SHOWN ON THESE PLANS.

7. FLASHING VISUAL WARNING DEVICES SHALL HAVE A FREQUENCY OF NOT MORE THAN 60 FLASHES PER MINUTE AND SHALL BE SYNCHRONIZED.

8. STROBE SIGNALING DEVICES FOR THE HEARING IMPAIRED SHALL BE STATE FIRE MARSHAL APPROVED AND LISTED.

SPECIAL NOTE

EOL RESISTOR DEVICES SHALL BE INSTALLED INSIDE EACH FIRE ALARM TERMINAL CABINET.

FIRE ALARM EQUIPMENT SCHEDULE

ITEM DESCRIPTION	SYMBOL	MOUNTING	CATALOG NO.	CSFM LISTING NO.
EXISTING FIRE ALARM CONTROL PANEL "FACP" (NETWORKABLE)	▭	+48"	ILI-HB-E9	7165-1109:0125
EXISTING NOTIFICATION APPLIANCE CIRCUIT POWER SUPPLY "NAC" (DSA #04-109912)	▭	+48"	HPF2456	7315-1697:0102
HEAT DETECTOR 4 SQUARE DEEP BOX WITH 5-0 RING	⊙	CEILING	ATD-RL2F / B210LP (BASE)	7270-1109:015 7300-1895:0101
COMBINATION HORN AND VISUAL DEVICE SEPARATELY CIRCUITED ON FLUSH WALL MOUNTED OUTLET BOXES (15/75 OR 110 CANDELA AS INDICATED)	75 ▽ F	LENS BETWEEN +80" AND +96" OR +80" TO BOTTOM OF LENS	P2R (SYSTEM SENSOR)	7125-1653:0188
EXISTING HORN - WEATHER RESISTANT SA-WRB-R WEATHERPROOF BACKBOX (DSA #04-109912)	▽ WP F	+80"	HRK (SYSTEM SENSOR)	7125-1653:0184
ADDRESSABLE MANUAL PULL STATION	F	+48"	MS-7AF	7150-1109:0114

SEQUENCE OF OPERATION MATRIX

ACTION	DEVICES		
	MANUAL PULL STATION	SMOKE/HEAT DETECTORS	AC POWER FAILURE
SOUND ALARM AT FACP	YES	YES	NO
ACTIVATE RELAY FOR OFF-SITE MONITORING	YES	YES	YES
SOUND TROUBLE SIGNAL AT FACP	ON WIRING FAULT	ON WIRING FAULT	YES
ANNUNCIATE AT FACP	YES	YES	YES
ACTIVE HORNS AND VISUALS	YES	YES	NO

SUPERVISORY SIGNAL

FIRE ALARM SYSTEM DESCRIPTION

THE FIRE ALARM SYSTEM CONSISTS OF MODIFICATIONS TO A RECENTLY INSTALLED, FULLY AUTOMATIC, NETWORKED, ADDRESSABLE SYSTEM.

THE EXISTING FIRE ALARM SYSTEM IN THIS BUILDING WAS INSTALLED UNDER DSA #04-109912.

FIRE ALARM WIRING SCHEDULE	
DESIG.	DESCRIPTION
AV	AUDIO/VISUAL CIRCUIT, 2#12 THHN
Z	ADDRESSABLE LOOP, 1 TWISTED PAIR #16
P	POWER CIRCUIT, 2#14

* ALL FIRE ALARM WIRING SHALL BE ROUTED IN 3/4"G EMT. (MINIMUM)

FIRE RATED WALL LEGEND	
▬▬ ▌▌▌▌ ▬▬	LINE OF 4-HOUR RATED WALL ASSEMBLY
▬▬ ▌ ▌ ▬▬	LINE OF 2-HOUR RATED WALL ASSEMBLY
▬ · ▬ · ▬ · ▬	LINE OF 1-HOUR RATED WALL ASSEMBLY

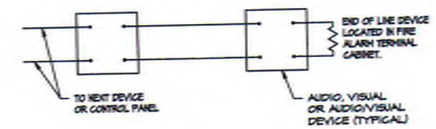

TYPICAL AUDIO/VISUAL CIRCUIT WIRING DIAGRAM (1 / EF-001)

NO SCALE

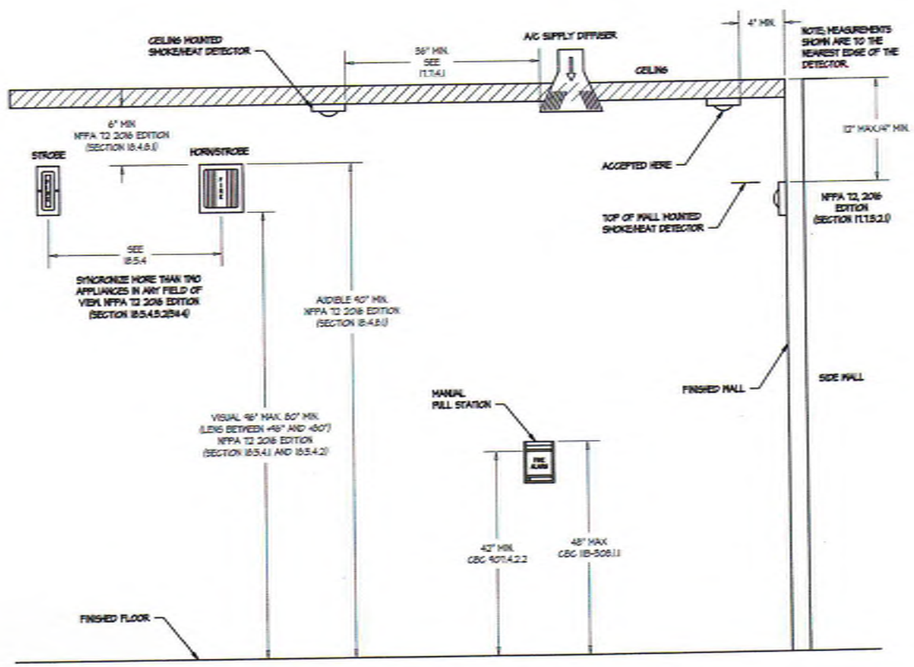

FIRE ALARM DEVICE ELEVATIONS (2 / EF-001)

NO SCALE

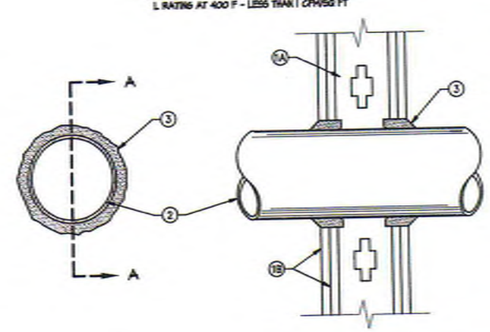

SECTION A-A

KEYNOTES

1. WALL ASSEMBLY - THE 1/2,3 OR 4 HR FIRE-RATED GYPSUM WALLBOARD/STUD WALL ASSEMBLY SHALL BE CONSTRUCTED OF THE MATERIALS AND IN THE MANNER DESCRIBED IN THE INDIVIDUAL U300 OR U400 SERIES WALL OR PARTITION DESIGNS IN THE UL FIRE RESISTANCE DIRECTORY AND SHALL INCLUDE THE FOLLOWING CONSTRUCTION FEATURES:

   A. STUDS - WALL FRAMING MAY CONSIST OF EITHER WOOD STUDS (MAX 2 HR FIRE RATED ASSEMBLIES) OR STEEL CHANNEL STUDS. WOOD STUDS TO CONSIST OF NOM 2 BY 4 IN. LUMBER SPACED 16 IN. OC WITH NOM 2 BY 4 IN. LUMBER END PLATES AND CROSS BRACES. STEEL STUDS TO BE MIN 3-5/8 IN. WIDE BY 1-3/8 IN. DEEP CHANNELS SPACED MAX 24 IN. OC.

   B. GYPSUM BOARD* - NOM 1/2 OR 5/8 IN.THICK, 4 FT. WIDE WITH SQUARE OR TAPERED EDGES. THE GYPSUM WALLBOARD TYPE, THICKNESS, NUMBER OF LAYERS, FASTENER TYPE AND SHEET ORIENTATION SHALL BE SPECIFIED IN THE INDIVIDUAL U300 OR U400 SERIES DESIGN IN THE UL FIRE RESISTANCE DIRECTORY. MAX DIAM OF OPENING IS 26 IN.

2. THROUGH PENETRANT - ONE CONDUIT INSTALLED EITHER CONCENTRICALLY OR ECCENTRICALLY WITHIN THE FIRESTOP SYSTEM. THE ANNULAR SPACE BETWEEN CONDUIT AND PERIPHERY OF OPENING SHALL BE MIN OF 0 IN. (POINT CONTACT) TO MAX 2 IN. CONDUIT TO BE RIGIDLY SUPPORTED ON BOTH SIDES OF WALL ASSEMBLY. THE FOLLOWING TYPES AND SIZES OF CONDUITS MAY BE USED:

   A. CONDUIT - NOM 6 IN. DIAM (OR SMALLER) STEEL CONDUIT OR NOM 4 IN. DIAM (OR SMALLER) STEEL ELECTRICAL METALLIC TUBING.

3. FILL, VOID OR CAVITY MATERIAL* - CAULK OR SEALANT - MIN 5/8", 1-1/4, 1-7/8 AND 2-1/2 IN. THICKNESS OF CAULK FOR 1,2,3 AND 4 HR RATED ASSEMBLIES, RESPECTIVELY, APPLIED WITHIN ANNULUS, FLUSH WITH BOTH SURFACES OF WALL. MIN 1/4 IN. DIAM BEAD OF CAULK APPLIED TO GYPSUM BOARD/PENETRANT INTERFACE AT POINT CONTACT LOCATION ON BOTH SIDES OF WALL. THE HOURLY F RATING OF THE FIRESTOP SYSTEM IS DEPENDENT UPON THE HOURLY FIRE RATING OF THE WALL ASSEMBLY IN WHICH IT IS INSTALLED, AS SHOWN IN THE FOLLOWING TABLE. THE HOURLY T RATING OF THE FIRESTOP SYSTEM IS DEPENDENT UPON THE TYPE OR SIZE OF THE PIPE OR CONDUIT AND THE HOURLY FIRE RATING OF THE WALL ASSEMBLY IN WHICH IT IS INSTALLED, AS TABULATED BELOW:

ID MAX PIPE OR CONDUIT DIAM IN.	F RATING HR	T RATING HR
1	1 or 2	0, 1 or 2
1	3 or 4	3 or 4
4	1 or 2	0
6	3 or 4	0
12	1 or 2	0

3M COMPANY - CP 25WB+ CAULK OR FB-3000 WT SEALANT,

*BEARING THE UL CLASSIFICATION MARKING

GYPSUM BOARD WALL/CEILING CONDUIT PENETRATION DETAIL (3 / EF-001)

NO SCALE

TURPIN & RATTAN
CONSULTING ENGINEERS, INC.
CONSULTING ENGINEERS
4719 PALM AVENUE
LA MESA, CA 91941-5221
619 / 466 / 6224 FAX 466 / 6233
E-MAIL: ENGINEERS@TREISD.COM

TREI PROJECT # 16432.501

PREPARED FOR THE
GROSSMONT UNION HIGH SCHOOL DISTRICT
P.O.BOX 1043
LA MESA, CALIFORNIA

PREPARED BY
PLATT/WHITELAW ARCHITECTS, INC.
4094 30TH STREET
SAN DIEGO, CA (619)546-4328 FAX (619)546-4360

CERTIFICATION STAMP
DIV. OF THE STATE ARCHITECT
OFFICE OF REGULATION SERVICES
04-115000
FILE 02144
AC.
P.O.
DATE 04.27.17

FIRE ALARM LEGEND AND GENERAL NOTES

CENTRAL PLANT EQUIPMENT UPGRADE

VALHALLA HIGH SCHOOL
1725 HILLSDALE ROAD
EL CAJON, CA 92019

REVISION	DATE

PROJECT NO. PMA #0561.10

FILE NAME:

DATE: 4/14/2017 DRAWN: EL/PS CHECKED: CR/MR

EF-001

SHEET NO. : OF SHEETS

J:\16\16432.501 - GUHSD Valhalla HS Central Plant Upgrade\16432.00\Acadproj\16432.00_EF-001_FIRE ALARM LEGEND AND GENERAL NOTES.dwg 04/14/2017 20:12

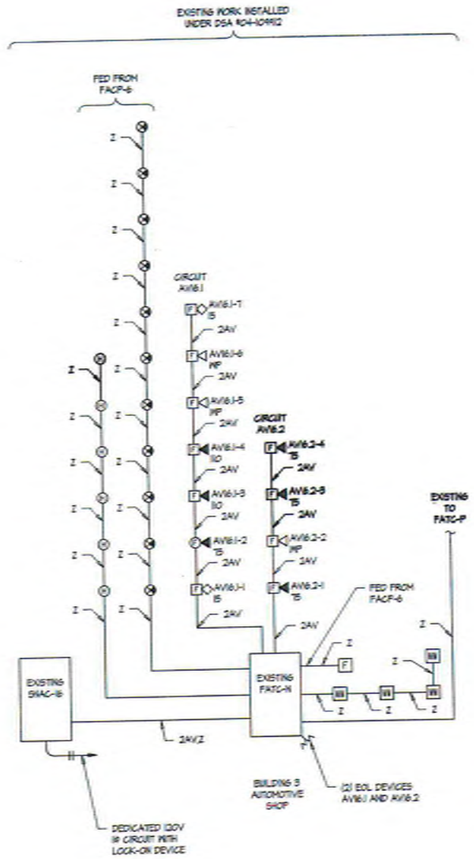

FIRE ALARM RISER

NO SCALE

LOAD CALCULATION - SNAC-16

Qty.	Item	Mfgr.	Model #	Standby Current	Standby Total	Alarm Current	Alarm Total
2	15CD Strobe		SR (SYSTEM SENSOR)	0	0	0.066	0.132
1	75CD Horn/Strobe		P2R (SYSTEM SENSOR)	0	0	0.157	0.157
2	110CD Horn/Strobe		P2R (SYSTEM SENSOR)	0	0	0.201	0.402
1	75CD Horn/Strobe (CC)		PC2R (SYSTEM SENSOR)	0	0	0.157	0.157
3	Horn Only		HRK (SYSTEM SENSOR)	0	0	0.058	0.174
4	Monitor Modules		AOM-2S	0.0003	0.0012	0.000	0.0012
2	New 75CD Horn/Strobe		P2R (SYSTEM SENSOR)	0	0	0.157	0.314
					0		0
1	S.N.A.C PANEL		HPF24/98	0.065	0.065	0.145	0.145
Totals					0.0662		1.4822

VOLTAGE DROP CALCULATION: (WORST CASE)

CIRCUIT AV16.2 $0.524\ A \times \frac{500}{6560} \times 2.6 \times \frac{100}{24} = 2.14\%$

(1) HORN AT 0.058 A = 0.058 A
(8) 75CD HORN/STROBES AT 0.157 A = 0.411 A
TOTAL 0.524 A

BATTERY CALCS - SNAC-16

Battery Calculation

A) Required Battery Backup (Standby)		24 Hours				
B) Required Battery Backup (Alarm)		5 minutes = 0.08 hours				
C) Allowable Error		25%				
D) Total Standby Backup:	0.0662	x	24	=	1.5888	AH
E) Total Alarm Backup:	1.4822	x	0.08	=	0.12	AH
F) 25% of D+E	25%	x	1.71	=	0.43	AH
Total AH Required					2.13	AH
?	AH Existing Batteries are adequate.					

TURPIN & RATTAN ENGINEERING, INC.
CONSULTING ENGINEERS
4719 PALM AVENUE
LA MESA, CA 91941-5221
619 / 466 / 6224 FAX 466 / 6233
E-MAIL: ENGINEER@TREISD.COM

TREI PROJECT # 16432.SD1

PREPARED FOR THE
GROSSMONT UNION HIGH SCHOOL DISTRICT
P.O.BOX 1043
LA MESA, CALIFORNIA

PREPARED BY
PLATT/WHITELAW ARCHITECTS, INC.
4034 30TH STREET
SAN DIEGO, CA (619)546-4888 FAX (619)546-4880

VERIFICATION STAMP
DIV. OF THE STATE ARCHITECT
OFFICE OF REGULATION SERVICES
04-115030
FILE 07144
AC.
DATE 04 27 17

FIRE ALARM RISER AND LOAD CALCULATIONS

CENTRAL PLANT EQUIPMENT UPGRADE

VALHALLA HIGH SCHOOL
1725 HILLSDALE ROAD
EL CAJON, CA 92019

REVISION	DATE

PROJECT NO. FWA #056110

FILE NAME:

DATE: 4/14/2017 DRAWN: EL/PS CHECKED: CR/MR

EF-002

SHEET NO. 1 OF SHEETS

J:\16\16432.SD1 - GUHSD Valhalla HS Central Plant Upgrade\16432.SD\Acad\16432.SD_EF-002_FIRE ALARM RISER AND LOAD CALCULATIONS.dwg 04/14/2017 20:14

KEYNOTE

1. EXISTING FIRE ALARM DEVICE SHALL BE CLEANED AND SAVED FOR RECONNECTION.

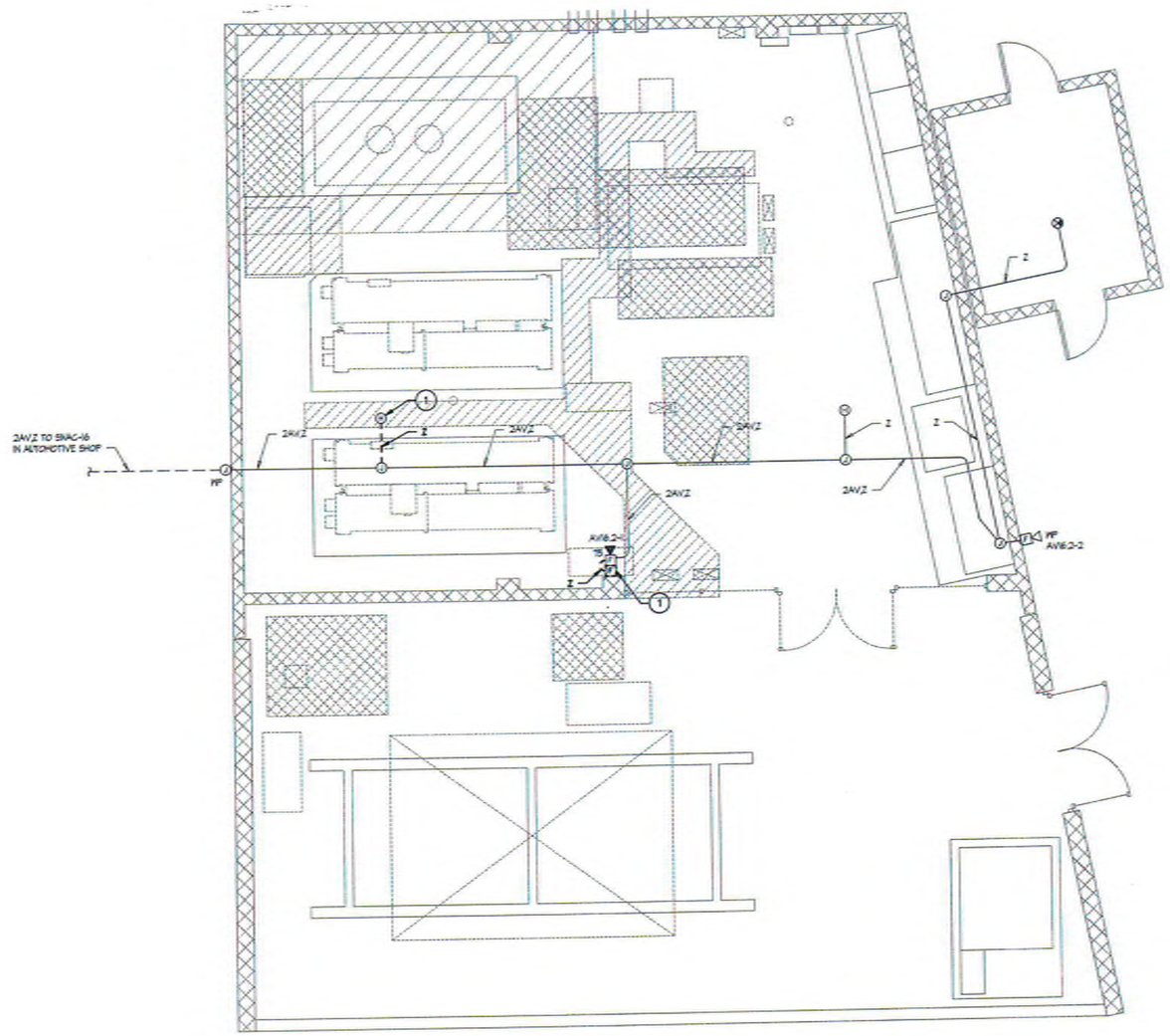

FIRE ALARM - DEMOLITION FLOOR PLAN

SCALE: 1/4" = 1'-0"

0 2' 4' 8' 12'
1/4" = 1'-0"

TURPIN & RATTAN ENGINEERING, INC.
CONSULTING ENGINEERS
4719 PALM AVENUE
LA MESA, CA 91941-5221
619 / 466 / 6224 FAX 466 / 6233
E-MAIL: ENGINEER@TRCSD.COM

TRE: PROJECT # 16432.S01

PREPARED FOR THE
GROSSMONT UNION HIGH SCHOOL DISTRICT
P.O.BOX 1043
LA MESA, CALIFORNIA

PREPARED BY
PLATT/WHITELAW ARCHITECTS, INC.
4094 30TH STREET
SAN DIEGO, CA (619)549-4250 FAX (619)549-4250

CERTIFICATION STAMP
DIV. OF THE STATE ARCHITECT
OFFICE OF REGULATION SERVICES
04-115930
FILE 07144
AC
DATE 04.27.17

FIRE ALARM - DEMOLITION FLOOR PLAN

CENTRAL PLANT EQUIPMENT UPGRADE

VALHALLA HIGH SCHOOL
1726 HILLSDALE ROAD
EL CAJON, CA 92019

REVISION	DATE

PROJECT NO. PWA #0861.10

FILE NAME:

DATE: 4/4/2017 DRAWN: EL/PS CHECKED: CR/MR

EF-101

SHEET NO. OF SHEETS

J:\16\16432.S01 - GUHSD Valhalla HS Central Plant Upgrade\16432.00\design\16432.00_EF-101_FIRE ALARM - DEMOLITION FLOOR PLAN.dwg 04/18/2017 2017

KEYNOTES

1. 1-HR RATED WALL. SEE SIEF-001 FOR ALL CONDUIT PENETRATIONS OF THIS WALL.
2. 1-HR RATED GYP. BOARD CEILING IN THIS ROOM. SEE DETAIL SIEF-001 FOR ALL CONDUIT PENETRATIONS OF THIS CEILING.

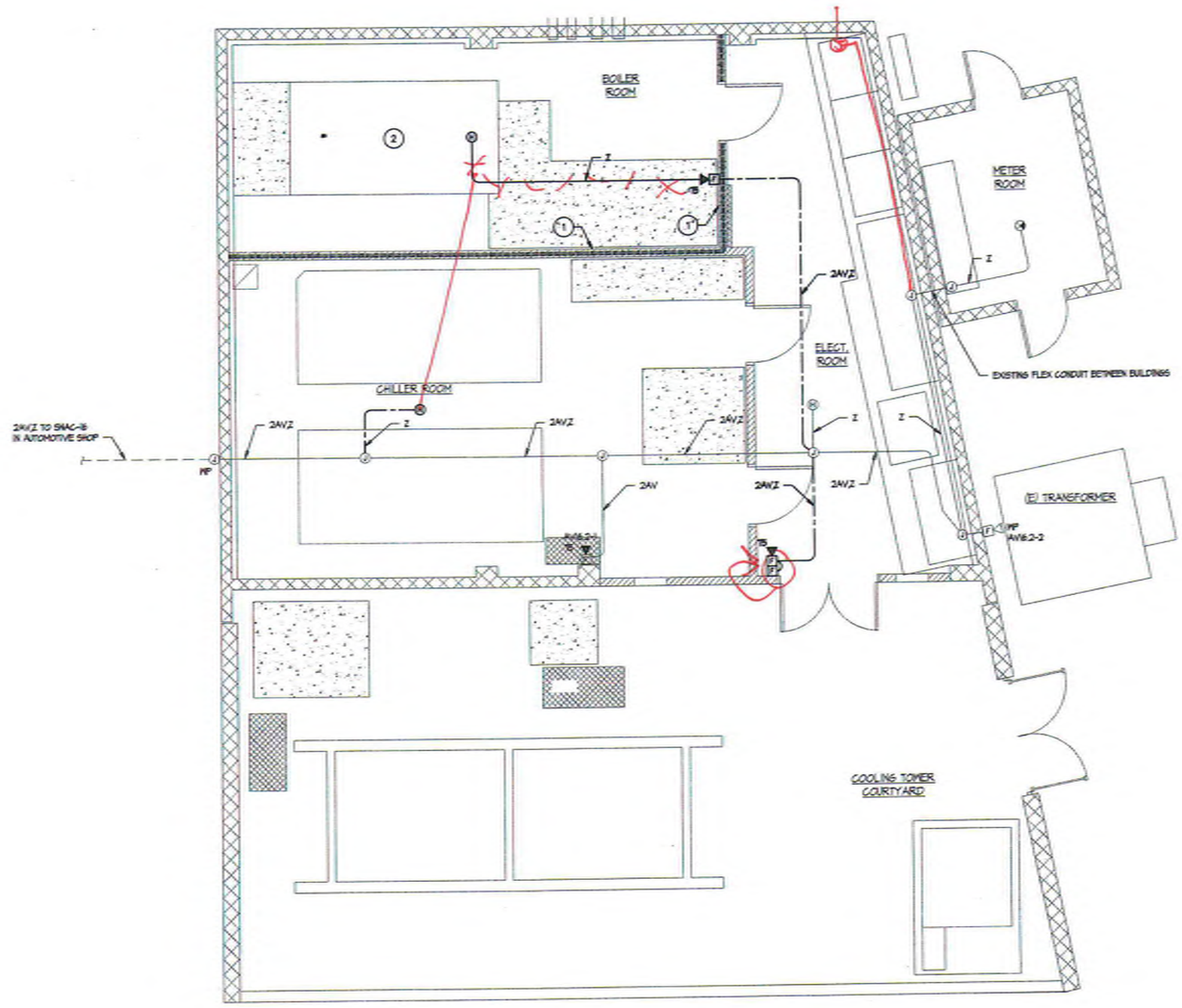

FIRE ALARM - FLOOR PLAN

SCALE: 1/4" = 1'-0"

0 2' 4' 8' 12'

1/4" = 1'-0"

NORTH

TURPIN & RATTAN ENGINEERING, INC.
CONSULTING ENGINEERS
4719 PALM AVENUE
LA MESA, CA 91941-5221
619 / 466 / 6224 FAX 466 / 6233
E-MAIL: ENGINEER@TRNEC.COM

TREI PROJECT # 16432.S01

PREPARED FOR THE
GROSSMONT UNION HIGH SCHOOL DISTRICT
P.O.BOX 1043
LA MESA, CALIFORNIA

PREPARED BY
PLATT/WHITELAW ARCHITECTS, INC.
4094 30TH STREET
SAN DIEGO, CA (619)546-4988 FAX (619)546-4980

CERTIFICATION STAMP
DIV. OF THE STATE ARCHITECT
OFFICE OF REGULATORY SERVICES
04-115930
FILE 43744
AC. 1-18
DATE 04 24 00

FIRE ALARM - FLOOR PLAN

CENTRAL PLANT EQUIPMENT UPGRADE

VALHALLA HIGH SCHOOL
1725 HILLSDALE ROAD
EL CAJON, CA 92019

REVISION	DATE

PROJECT NO. PMA #0561.10

FILE NAME:

DATE: 4/14/2017 DRAWN: EL/PS CHECKED: GR/MR

EF-201

SHEET NO. : OF SHEETS

INTENTIONALLY LEFT BLANK

KEYNOTES

1. INTERCEPT EXISTING SPARE 4" CONDUIT IN EXISTING EXTERIOR PULLBOX WITH NEW 'PPE'.
2. SEE DETAIL 5/E-403 FOR BLOCK DIAGRAM.
3. REFER TO SINGLE LINE DIAGRAM ON SHEET E-504 FOR REQUIREMENTS.
4. NEW 20"X20"X6" PULLBOX. VERIFY EXACT SIZE AND LOCATION WITH ENGINE VENDOR PRIOR TO ROUGH-IN.

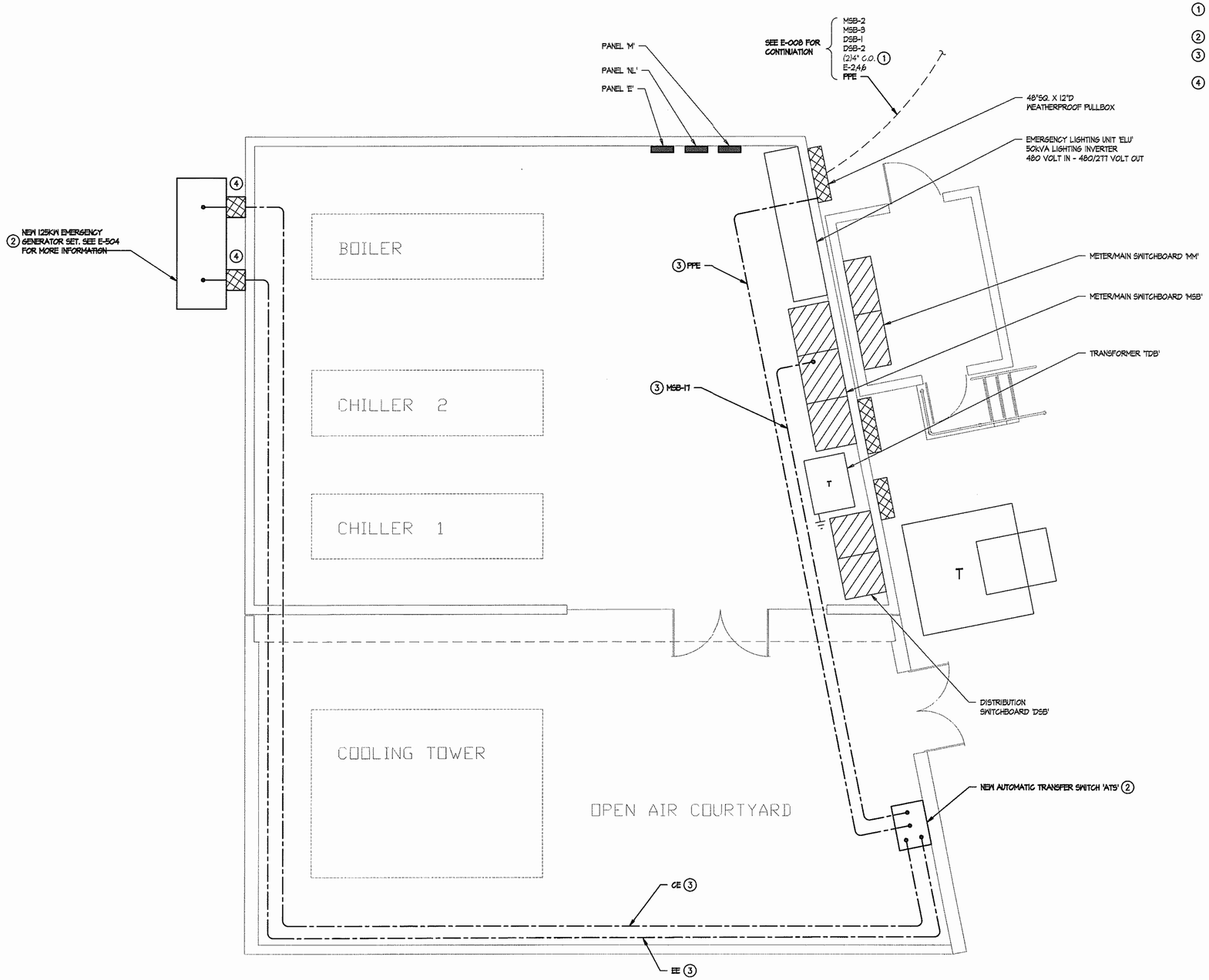

ENLARGED SITE PLAN

SCALE: 1/4"=1'-0"

0 2' 4' 8' 12'

1/4" = 1'-0"

NORTH

TURPIN & RATTAN ENGINEERING, INC.
CONSULTING ENGINEERS
4719 PALM AVENUE
LA MESA, CA 91941-5221
619 / 466 / 6224 FAX 466 / 6233
E-MAIL: ENGINEER@TREISD.COM
TREI # 09219.07

H:\LOZANO 01/26/15 - 4:30PM
S:\09\09219.07\09219.07\acadproj\
09219.07_E-009_ENLARGED SITE PLAN.DWG

PREPARED FOR THE
GROSSMONT UNION HIGH SCHOOL DISTRICT
P.O.BOX 1043
LA MESA, CALIFORNIA

PREPARED BY
PLATT/WHITELAW ARCHITECTS, INC.
4034 30TH STREET
SAN DIEGO, CA (619)546-4326 FAX (619)546-4350

IDENTIFICATION STAMP
DIV. OF THE STATE ARCHITECT
OFFICE OF REGULATION SERVICES
04-113708
FILE # 37-144
AC ___ FLS ___ SS ___ GL ___
DATE MAR 04 2015

REGISTERED PROFESSIONAL ENGINEER
MARTIN A. RIGGS
19334
Exp. 12-31-16
ELECTRICAL
STATE OF CALIFORNIA

01/23/15

REGISTERED ARCHITECT
PLATT/WHITELAW ARCHITECTS, INC.
C-10329
EXP. 7-31-15
CIVIL
STATE OF CALIFORNIA

ENLARGED SITE PLAN

MAIN BUILDING FULL MODERNIZATION

VALHALLA HIGH SCHOOL
1725 HILLSDALE ROAD
EL CAJON, CA 92019

REVISION	DATE

index

PROJECT NO. PWA 0361.4

FILE NAME:

DATE: JAN 15, 2015

DRAWN: PS/HL
CHECKED: MR

E-009

SHEET NO. : - OF - SHEETS

S:\09\09219.07\09219.07\acadproj\09219.07_e-009_enlarged site planning - 1/26/2015 4:30 PM - hejal lozano

KEYNOTES

1. EXISTING WALL MOUNTED 36" SQ X 12" D WEATHERPROOF PULLBOX AND SPARE CONDUITS STUBBED INTO MEZZANINE SPACE TO BE REMOVED. CUT BACK CONDUITS TO EXISTING UNDERGROUND TRENCH TO GRADE AND INSTALL NEW FLUSH MOUNTED HANDHOLE.
2. NEW FEEDER 'PPE' IN EXISTING SPARE UNDERGROUND CONDUIT BETWEEN EXISTING EXTERIOR PULLBOXES. EXTEND NEW CONDUIT WITH NEW FEEDER 'PPE' FROM EXISTING PULLBOX TO NEW DISTRIBUTION SWITCHBOARD 'PPE'
3. RE-USE EXISTING EXTERIOR LIGHTING CONDUIT PATHWAYS WHERE APPLICABLE.

ELECTRICAL LEGEND

SYMBOL	DESCRIPTION
	WHEN HOMERUN IS NOT SHOWN, BRANCH CIRCUIT NUMBER(S) (AND PANELBOARD) ARE DESIGNATED BY NUMBERS ADJACENT TO OUTLET:
HA-2a	INDICATES CONTROLLING SWITCH LEG.
J PA-7	DENOTES BRANCH CIRCUIT(S) SUPPLYING OUTLET.
	WHEN USED, DENOTES PANELBOARD SUPPLYING OUTLET.
PA-13,5 #10	DENOTES BRANCH CIRCUIT WIRE SIZE WHEN OTHER THAN 12 AWG.
	BRANCH CIRCUIT WIRING NOTE: MULTIWIRE BRANCH CIRCUITS SHALL ORIGINATE FROM MULTIPLE-POLE CIRCUIT BREAKERS AS REQUIRED BY CEC (NEC) 210.4(B). BRANCH CIRCUITS THAT ORIGINATE FROM SINGLE-POLE CIRCUIT BREAKERS SHALL NOT BE INSTALLED AS PART OF A MULTIWIRE CIRCUIT. EACH SINGLE-POLE BREAKER CIRCUIT SHALL HAVE A DEDICATED NEUTRAL CONDUCTOR. REFER TO THE PANEL SCHEDULES FOR CIRCUIT BREAKER REQUIREMENTS.

SITE PLAN

SCALE: 1"=30'-0"

0 15' 30' 60' 90'

1" = 30'-0"

NORTH

TURPIN & RATTAN ENGINEERING, INC.
CONSULTING ENGINEERS
4719 PALM AVENUE
LA MESA, CA 91941-5221
619 / 466 / 6224 FAX 466 / 6233
E-MAIL: ENGINEER@TREISD.COM
TREI # 09219.07

H.LOZANO 01/26/15 - 4:30PM
S:\09\09219.07\09219.07\AcadProj\
09219.07_E-008_SITE PLAN.DWG

PREPARED FOR THE
GROSSMONT UNION HIGH SCHOOL DISTRICT
P.O.BOX 1043
LA MESA, CALIFORNIA

PREPARED BY
PLATT/WHITELAW ARCHITECTS, INC.
4034 30TH STREET
SAN DIEGO, CA (619)546-4326 FAX (619)546-4350

IDENTIFICATION STAMP
DIV. OF THE STATE ARCHITECT
OFFICE OF REGULATION SERVICES
113708
FILE # 37-H4
AC FLS SSS
DATE MAR 04 2015

REGISTERED PROFESSIONAL ENGINEER
A. R. GOGS
19334
Exp. 12-31-16
ELECTRICAL
STATE OF CALIFORNIA
01/23/15

REGISTERED ARCHITECT
KIRK M. WHITELAW
C-13275
Exp. 7-31-15
ARCHITECT
STATE OF CALIFORNIA

SITE PLAN

MAIN BUILDING FULL MODERNIZATION

VALHALLA HIGH SCHOOL
1725 HILLSDALE ROAD
EL CAJON, CA 92019

REVISION	DATE

index

PROJECT NO. PWA 0361.4

FILE NAME:

DATE: JAN 15, 2015 DRAWN: PS/HL CHECKED: MR

E-008

SHEET NO. : - OF - SHEETS

g:\09\09219.07\09219.07\acadproj\09219.07_e-008_site planding - 1/26/2015 4:30 PM - hugo lozano

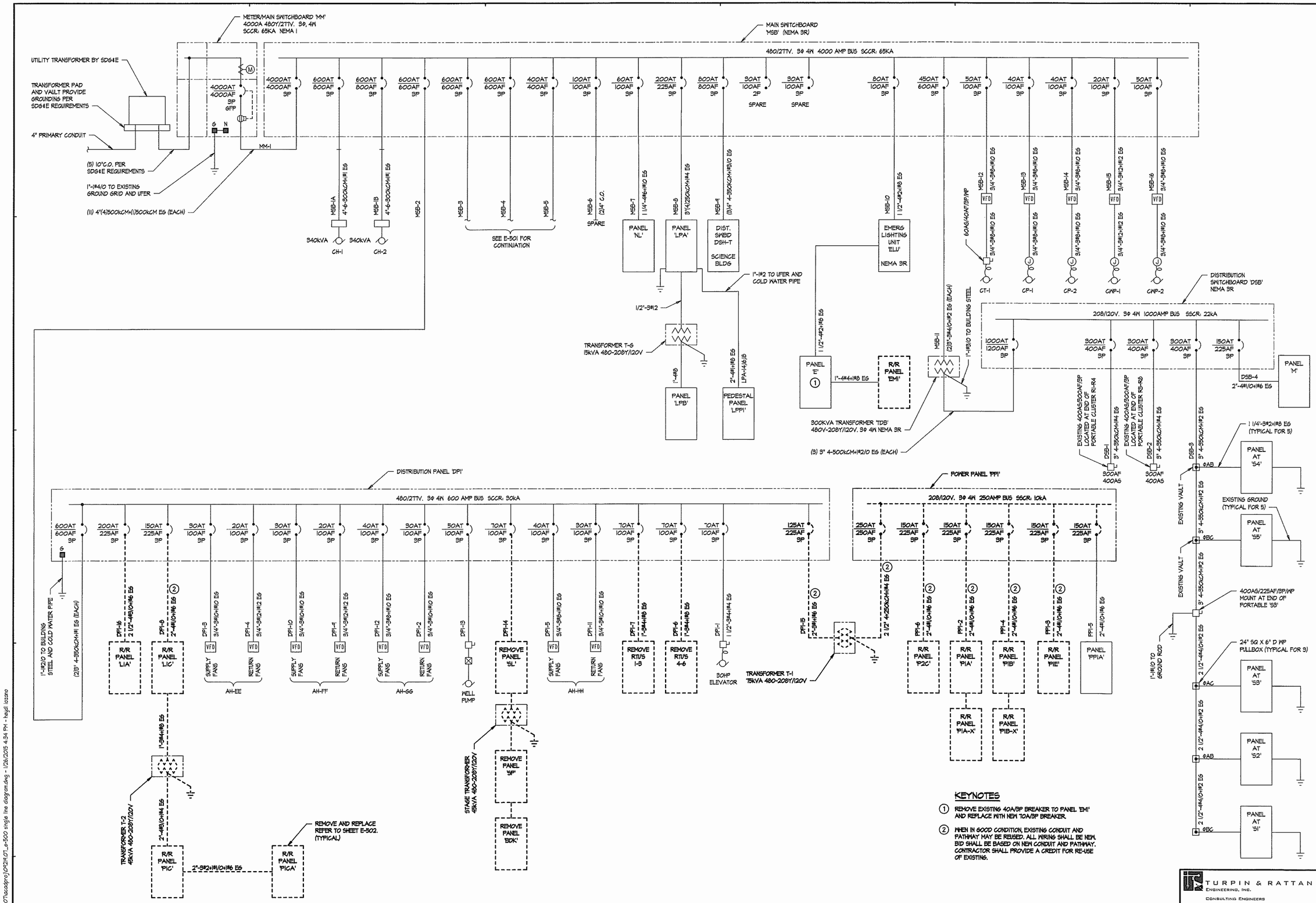

KEYNOTES

1. REMOVE EXISTING 40A/3P BREAKER TO PANEL 'EM1' AND REPLACE WITH NEW 70A/3P BREAKER.
2. WHEN IN GOOD CONDITION, EXISTING CONDUIT AND PATHWAY MAY BE REUSED. ALL WIRING SHALL BE NEW. BID SHALL BE BASED ON NEW CONDUIT AND PATHWAY. CONTRACTOR SHALL PROVIDE A CREDIT FOR RE-USE OF EXISTING.

PARTIAL SINGLE LINE DIAGRAM - DEMOLITION

NO SCALE

PREPARED FOR THE
GROSSMONT UNION HIGH SCHOOL DISTRICT
P.O.BOX 1043
LA MESA, CALIFORNIA

PREPARED BY
PLATT/WHITELAW ARCHITECTS, INC.
4034 30TH STREET
SAN DIEGO, CA (619)546-4326 FAX (619)546-4350

IDENTIFICATION STAMP
DIV. OF THE STATE ARCHITECT
OFFICE OF REGULATION SERVICES
04-113708
FILE # 37-H4
AC FLS SS
DATE MAR 04 2015

REGISTERED PROFESSIONAL ENGINEER
MARK E. RIGGS
19334
Exp. 12-31-16
ELECTRICAL
STATE OF CALIFORNIA

01/23/15

REGISTERED ARCHITECT
PLATT/WHITELAW ARCHITECTS, INC.
C-10375
Exp. 12-31-15
ARCHITECT
STATE OF CALIFORNIA

PARTIAL SINGLE LINE DIAGRAM

MAIN BUILDING FULL MODERNIZATION

VALHALLA HIGH SCHOOL
1725 HILLSDALE ROAD
EL CAJON, CA 92019

REVISION	DATE

index

TURPIN & RATTAN ENGINEERING, INC.
CONSULTING ENGINEERS
4719 PALM AVENUE
LA MESA, CA 91941-5221
619/466/5224 FAX 466/5233
E-MAIL: ENGINEER@TREIBD.COM
TREI # 09219.07

H:\LOZANO 01/26/15 - 4:34PM
G:\09\09219.07\09219.07\acadprog\09219.07_e-500 single line diagram.dwg

PROJECT NO. PWA 0361.4

FILE NAME:

DATE: JAN 15, 2015 DRAWN: PS/HL CHECKED: MR

E-500

SHEET NO. : - OF - SHEETS

g:\09\09219.07\09219.07\acadprog\09219.07_e-500 single line diagram.dwg - 1/26/2015 4:34 PM - hugo lozano

PANEL ID: MSB — EXISTING

LOCATION: E. YARD
MAIN: 400A/3P M.C.B.
BUS AMPS: 4000
MOUNTING: SURFACE
AIC RATING: 65KA

FEEDER/SYSTEM — FED FROM: FEEDER OCP: AMPS — SYSTEM: 480 /277V, 3-PH, 4W

LOAD TYPES — blank or NON: NON-CONTINUOUS; LCL: LONG-CONTINUOUS; REC: DEMANDABLE RECEPT'S; KIT: KITCHEN; PNL: SUB-FED PNL; UNIT: RESID. UNIT; MTR: MOTOR

	CONNECTED VA	DEMAND VA	PH A	PH B	PH C	
GEN'L LOAD:	814591	814591	973841	961761	954556	CONNECTED LOAD PER PHASE
LONG CONTIN.:	109473	136841		2890188		TOTAL CONNECTED LOAD (VA)
GEN'L RECEPT:	310571	160286		3476		AMPS OF TOTAL CONNECTED LOAD
MOTOR LOAD:	1324752	+25% OF LARGEST		2478695		TOTAL DEMAND VA (BALANCED)
KITCHEN LOAD:	21372	13892		3096		HIGH PHASE AMPS/L-CL

PANEL NOTES:

PANEL ID: DP1 — EXISTING

LOCATION: MEZZ
MAIN: 600A/3P M.C.B.
BUS AMPS: 600
MOUNTING: SURFACE
AIC RATING: 30KA

FEEDER/SYSTEM — FED FROM: MSB; FEEDER OCP: AMPS — SYSTEM: 480 /277V, 3-PH, 4W

LOAD TYPES — blank or NON: NON-CONTINUOUS; LCL: LONG-CONTINUOUS; REC: DEMANDABLE RECEPT'S; KIT: KITCHEN; PNL: SUB-FED PNL; UNIT: RESID. UNIT; MTR: MOTOR

	CONNECTED VA	DEMAND VA	PH A	PH B	PH C	
GEN'L LOAD:	116202	116202	173027	167848	164243	CONNECTED LOAD PER PHASE
LONG CONTIN.:	30909	38636		505218		TOTAL CONNECTED LOAD (VA)
GEN'L RECEPT:	147875	78938		608		AMPS OF TOTAL CONNECTED LOAD
MOTOR LOAD:	198652	+25% OF LARGEST		440752		TOTAL DEMAND VA (BALANCED)
KITCHEN LOAD:	9080	5902		559		HIGH PHASE AMPS/L-CL

PANEL NOTES:

PANEL ID: DP2 — EXISTING

LOCATION: MEZZ
MAIN: 600A/3P M.C.B.
BUS AMPS: 600
MOUNTING: SURFACE
AIC RATING: 30KA

FEEDER/SYSTEM — FED FROM: MSB; FEEDER OCP: AMPS — SYSTEM: 480 /277V, 3-PH, 4W

LOAD TYPES — blank or NON: NON-CONTINUOUS; LCL: LONG-CONTINUOUS; REC: DEMANDABLE RECEPT'S; KIT: KITCHEN; PNL: SUB-FED PNL; UNIT: RESID. UNIT; MTR: MOTOR

	CONNECTED VA	DEMAND VA	PH A	PH B	PH C	
GEN'L LOAD:	55804	55804	103522	151442	149464	CONNECTED LOAD PER PHASE
LONG CONTIN.:	65124	68905		454428		TOTAL CONNECTED LOAD (VA)
GEN'L RECEPT:	109746	59873		547		AMPS OF TOTAL CONNECTED LOAD
MOTOR LOAD:	218163	+25% OF LARGEST		404742		TOTAL DEMAND VA (BALANCED)
KITCHEN LOAD:	0	0		510		HIGH PHASE AMPS/L-CL

PANEL NOTES:

PANEL ID: DP3 — EXISTING

LOCATION: AUTO SHOP
MAIN: 600A/3P M.C.B.
BUS AMPS: 600
MOUNTING: SURFACE
AIC RATING: 30KA

FEEDER/SYSTEM — FED FROM: MSB; FEEDER OCP: AMPS — SYSTEM: 480 /277V, 3-PH, 4W

LOAD TYPES — blank or NON: NON-CONTINUOUS; LCL: LONG-CONTINUOUS; REC: DEMANDABLE RECEPT'S; KIT: KITCHEN; PNL: SUB-FED PNL; UNIT: RESID. UNIT; MTR: MOTOR

	CONNECTED VA	DEMAND VA	PH A	PH B	PH C	
GEN'L LOAD:	46429	46429	155210	154939	151597	CONNECTED LOAD PER PHASE
LONG CONTIN.:	23440	29300		461746		TOTAL CONNECTED LOAD (VA)
GEN'L RECEPT:	52950	31475		556		AMPS OF TOTAL CONNECTED LOAD
MOTOR LOAD:	140405	+25% OF LARGEST		259663		TOTAL DEMAND VA (BALANCED)
KITCHEN LOAD:	12292	8604		339		HIGH PHASE AMPS/L-CL

PANEL NOTES:

PANEL ID: PP1 — NEW

LOCATION: MEZZ
MAIN: 800A/3P M.C.B.
BUS AMPS: 800
MOUNTING: SURFACE
AIC RATING: 22KA

FEEDER/SYSTEM — FED FROM: DP1; FEEDER OCP: 800 AMPS — SYSTEM: 208 /120V, 3-PH, 4W

LOAD TYPES — blank or NON: NON-CONTINUOUS; LCL: LONG-CONTINUOUS; REC: DEMANDABLE RECEPT'S; KIT: KITCHEN; PNL: SUB-FED PNL; UNIT: RESID. UNIT; MTR: MOTOR

CKT	DESCRIPTION	LOAD TYPE	BKR	LOAD (VA) PH A	LOAD (VA) PH B	LOAD (VA) PH C	BKR	LOAD TYPE	DESCRIPTION	CKT
1	PANEL P2C	PNL	150/	20070	7475		150/	PNL	PANEL P1E	2
3	SAME AS CIRCUIT ABOVE	PNL	/		18640	7840	/	PNL	SAME AS CIRCUIT ABOVE	4
5	SAME AS CIRCUIT ABOVE	PNL	/3			16290	7600 /3	PNL	SAME AS CIRCUIT ABOVE	6
7	PANEL P1A	PNL	150/	20332	5441		150/	PNL	PANEL PP1A	8
9	SAME AS CIRCUIT ABOVE	PNL	/		16740	4250	/	PNL	SAME AS CIRCUIT ABOVE	10
11	SAME AS CIRCUIT ABOVE	PNL	/3			16830	5011 /3	PNL	SAME AS CIRCUIT ABOVE	12
13	PANEL P1B	PNL	150/	14460						14
15	SAME AS CIRCUIT ABOVE	PNL	/		15740					16
17	SAME AS CIRCUIT ABOVE	PNL	/3			13240				18
19										20
21										22
23										24
25										26
27										28
29										30
31										32
33										34
35										36
37										38
39										40
41										42

	CONNECTED VA	DEMAND VA	PH A	PH B	PH C	
GEN'L LOAD:	70060	70060	67776	63210	58971	CONNECTED LOAD PER PHASE
LONG CONTIN.:	10430	13038		189959		TOTAL CONNECTED LOAD (VA)
GEN'L RECEPT:	69020	49510		528		AMPS OF TOTAL CONNECTED LOAD
MOTOR LOAD:	10369	+25% OF LARGEST		149441		TOTAL DEMAND VA (BALANCED)
KITCHEN LOAD:	9080	5902		477		HIGH PHASE AMPS/L-CL

PANEL NOTES:

PANEL ID: PP1A — EXISTING

LOCATION: MEZZ
MAIN: 150A/3P M.C.B.
BUS AMPS: 225
MOUNTING: SURFACE
AIC RATING: 10KA

FEEDER/SYSTEM — FED FROM: PP1; FEEDER OCP: 150 AMPS — SYSTEM: 208 /120V, 3-PH, 4W

LOAD TYPES — blank or NON: NON-CONTINUOUS; LCL: LONG-CONTINUOUS; REC: DEMANDABLE RECEPT'S; KIT: KITCHEN; PNL: SUB-FED PNL; UNIT: RESID. UNIT; MTR: MOTOR

CKT	DESCRIPTION	LOAD TYPE	BKR	LOAD (VA) PH A	LOAD (VA) PH B	LOAD (VA) PH C	BKR	LOAD TYPE	DESCRIPTION	CKT
1	CONTROL AH-EE	NON	20/1	500	500		20/1	NON	CONTROL AH-GG	2
3	LTS + REC AH-EE	NON	20/1		500	500	20/1	NON	LTS + REC AH-GG	4
5	LTS + REC AH-CC	NON	20/1			500	500	20/1	NON	LTS + REC AH-DD	6
7	CONTROL AH-CC	NON	20/1	500	500		20/1	NON	CONTROL AH-DD	8
9	CONTROL AH-JJ	NON	20/1		500	500	20/1	NON	LTS + REC AH-HH	10
11	LTS + REC AH-JJ	NON	20/1			500	500	20/1	NON	CONTROL AH-HH	12
13	CONTROL AH-FF	NON	20/1	500	500		20/1	NON	LTS + REC AH-BB	14
15	LTS + REC AH-FF	NON	20/1		500	500	20/1	NON	CONTROL AH-BB	16
17	EF-15	MTR	20/1			670	500	20/1	NON	LTS + REC AH-PP,NN	18
19	EF-24	MTR	20/1	200	500		20/1	NON	CONTROL AH-PP,NN	20
21	EF-25	MTR	20/1		200		20/1		SPARE	22
23	EF-28	MTR	15/			285	1456 30/	MTR	AC-4/FC-4	24
25	SAME AS CIRCUIT ABOVE	MTR	/2	285	1456		/2	MTR	SAME AS CIRCUIT ABOVE	26
27	FSD Ω	NON	20/1		1000	50	20/1	NON	SHUNT TRIP FOR ELEVATOR	28
29	SPARE		20/1			100	20/1	MTR	EF-9	30
31	SPARE		20/1				20/1		SPARE	32
33	SPARE		20/1				20/1		SPARE	34
35	SPARE		20/1				20/1		SPARE	36
37	SPARE		20/1				20/1		SPARE	38
39	SPARE		20/1				20/1		SPARE	40
41	SPARE		20/1				20/1		SPARE	42

	CONNECTED VA	DEMAND VA	PH A	PH B	PH C	
GEN'L LOAD:	10050	10050	5441	4250	5011	CONNECTED LOAD PER PHASE
LONG CONTIN.:	0	0		14702		TOTAL CONNECTED LOAD (VA)
GEN'L RECEPT:	0	0		41		AMPS OF TOTAL CONNECTED LOAD
MOTOR LOAD:	4652	+25% OF LARGEST		15066		TOTAL DEMAND VA (BALANCED)
KITCHEN LOAD:	0	0		48		HIGH PHASE AMPS/L-CL

PANEL NOTES:
Δ EXISTING LOAD TO BE RECONNECTED. CONTRACTOR TO FIELD VERIFY LOCATION AND INDICATE ON AS-BUILTS.

PANEL ID: PP1B — NEW

LOCATION: ELECTRICAL 268
MAIN: 225A/3P M.C.B.
BUS AMPS: 225
MOUNTING: SURFACE
AIC RATING:

FEEDER/SYSTEM — FED FROM: DP2; FEEDER OCP: 225 AMPS — SYSTEM: 208 /120V, 3-PH, 4W

LOAD TYPES — blank or NON: NON-CONTINUOUS; LCL: LONG-CONTINUOUS; REC: DEMANDABLE RECEPT'S; KIT: KITCHEN; PNL: SUB-FED PNL; UNIT: RESID. UNIT; MTR: MOTOR

CKT	DESCRIPTION	LOAD TYPE	BKR	LOAD (VA) PH A	LOAD (VA) PH B	LOAD (VA) PH C	BKR	LOAD TYPE	DESCRIPTION	CKT
1	ROOM 254 FLOOR RECEPTACLE	REC	20/1	720	540		20/1	REC	CLASSROOM 254 RECEPTACLE	2
3	ROOM 254 FLOOR RECEPTACLE	REC	20/1		720	360	20/1	REC	CLASSROOM 254 RECEPTACLE	4
5	ROOM 254 RECEPTACLE	REC	20/1			720	900	20/1	REC	AV CHORAL SPEAKERS	6
7	ROOM 254 RECEPTACLE	REC	20/1	720	360		20/1	REC	CHORAL AV EQUIPMENT	8
9	ROOM 254 RECEPTACLE	REC	20/1		720		20/1	NON	IDF-1C Δ	10
11	CLASSROOM 255 RECEPTACLE	REC	20/1			540	360	20/1	REC	ROOM 259 RECEPTACLE	12
13	CLASSROOM 255 RECEPTACLE	REC	20/1	540	720		20/1	REC	ROOM 259 RECEPTACLE	14
15	CLASSROOM 255 RECEPTACLE	REC	20/1		720	720	20/1	REC	ROOM 259 RECEPTACLE	16
17	CLASSROOM 255 RECEPTACLE	REC	20/1			720	720	20/1	REC	ROOM 259 RECEPTACLE	18
19	CLASSROOM 255 LAPTOP CART	NON	20/1	800	720		20/1	REC	ROOM 259 RECEPTACLE	20
21	CLASSROOM 257 RECEPTACLE	REC	20/1		540	720	20/1	REC	ROOM 259 RECEPTACLE	22
23	CLASSROOM 257 RECEPTACLE	REC	20/1			540	800	20/1	REC	ROOM 259 LAPTOP CART	24
25	CLASSROOM 257 RECEPTACLE	REC	20/1	720	720		20/1	REC	CHORAL RECEPTACLE	26
27	CLASSROOM 257 RECEPTACLE	REC	20/1		720	720	20/1	REC	CHORAL RECEPTACLE	28
29	CLASSROOM 257 LAPTOP ART	NON	20/1			800	720	20/1	REC	CHORAL RECEPTACLE	30
31	CLASSROOM 258 RECEPTACLE	REC	20/1	540	720		20/1	REC	ROOM 256	32
33	CLASSROOM 258 RECEPTACLE	REC	20/1		540	720	20/1	REC	ROOM 256	34
35	CLASSROOM 258 RECEPTACLE	REC	20/1			720	20/1		SPARE	36
37	CLASSROOM 258 RECEPTACLE	REC	20/1	720	8216		100/	PNL	PANEL 'PP1C'	38
39	IDF-2A Δ	NON	20/1		9446		/	PNL	SAME AS CIRCUIT ABOVE	40
41	CLASSROOM 258 LAPTOP CART	REC	20/1			800	8636 /3	PNL	SAME AS CIRCUIT ABOVE	42
43	CLASSROOM 255 FLOOR RECEPTACLE	REC	20/1	720			20/1		SPARE	44
45	CLASSROOM 255 FLOOR RECEPTACLE	REC	20/1		720		20/1		SPARE	46
47	CLASSROOM 255 FLOOR RECEPTACLE	REC	20/1			720	20/1		SPARE	48
49	SPARE		20/1				20/1		SPARE	50
51	SPARE		20/1				20/1		SPARE	52
53	SPARE		20/1				20/1		SPARE	54

	CONNECTED VA	DEMAND VA	PH A	PH B	PH C	
GEN'L LOAD:	2800	2800	17476	17366	17696	CONNECTED LOAD PER PHASE
LONG CONTIN.:	1300	1625		52538		TOTAL CONNECTED LOAD (VA)
GEN'L RECEPT:	59146	24573		146		AMPS OF TOTAL CONNECTED LOAD
MOTOR LOAD:	9292	+25% OF LARGEST		38914		TOTAL DEMAND VA (BALANCED)
KITCHEN LOAD:	0	0		142		HIGH PHASE AMPS/L-CL

PANEL NOTES:
Δ EXISTING LOAD TO BE RECONNECTED. CONTRACTOR TO FIELD VERIFY LOCATION AND INDICATE ON AS-BUILTS.

PANEL ID: PP2 — EXISTING

LOCATION: MEZZ
MAIN: 400A/3P M.C.B.
BUS AMPS: 400
MOUNTING: SURFACE
AIC RATING:

FEEDER/SYSTEM — FED FROM: DP2; FEEDER OCP: 400 AMPS — SYSTEM: 208 /120V, 3-PH, 4W

LOAD TYPES — blank or NON: NON-CONTINUOUS; LCL: LONG-CONTINUOUS; REC: DEMANDABLE RECEPT'S; KIT: KITCHEN; PNL: SUB-FED PNL; UNIT: RESID. UNIT; MTR: MOTOR

CKT	DESCRIPTION	LOAD TYPE	BKR	LOAD (VA) PH A	LOAD (VA) PH B	LOAD (VA) PH C	BKR	LOAD TYPE	DESCRIPTION	CKT
1	P2A	PNL	150/	8520			200/		SPARE	2
3	SAME AS CIRCUIT ABOVE	PNL	/		8560		/		SAME AS CIRCUIT ABOVE	4
5	SAME AS CIRCUIT ABOVE	PNL	/3			6910	/3		SAME AS CIRCUIT ABOVE	6
7	P2B	PNL	150/	7980			70/			8
9	SAME AS CIRCUIT ABOVE	PNL	/		6960		/			10
11	SAME AS CIRCUIT ABOVE	PNL	/3			6420	/3			12
13	CAFE PANEL K	PNL	150/	4797			70/			14
15	SAME AS CIRCUIT ABOVE	PNL	/		4797		/			16
17	SAME AS CIRCUIT ABOVE	PNL	/3			5997	/3			18
19	PANEL P2D	PNL	200/	16500	941		20/	MTR	EF-10	20
21	SAME AS CIRCUIT ABOVE	PNL	/		18540	941	/	MTR	SAME AS CIRCUIT ABOVE	22
23	SAME AS CIRCUIT ABOVE	PNL	/3			17340 941	/3	MTR	SAME AS CIRCUIT ABOVE	24
25	P2E	PNL	150/	11137	941		20/	MTR	EF-11	26
27	SAME AS CIRCUIT ABOVE	PNL	/		9442	941	/	MTR	SAME AS CIRCUIT ABOVE	28
29	SAME AS CIRCUIT ABOVE	PNL	/3			9407 941	/3	MTR	SAME AS CIRCUIT ABOVE	30

	CONNECTED VA	DEMAND VA	PH A	PH B	PH C	
GEN'L LOAD:	52504	52504	50816	50181	47956	CONNECTED LOAD PER PHASE
LONG CONTIN.:	1100	1375		148953		TOTAL CONNECTED LOAD (VA)
GEN'L RECEPT:	70650	40300		414		AMPS OF TOTAL CONNECTED LOAD
MOTOR LOAD:	9158	+25% OF LARGEST		103597		TOTAL DEMAND VA (BALANCED)
KITCHEN LOAD:	0	0		333		HIGH PHASE AMPS/L-CL

PANEL NOTES:

PANEL ID: PP3 — EXISTING

LOCATION:
MAIN: 400A/3P M.C.B.
BUS AMPS: 400
MOUNTING: SURFACE
AIC RATING: 22KA

FEEDER/SYSTEM — FED FROM: DP3; FEEDER OCP: 400 AMPS — SYSTEM: 208 /120V, 3-PH, 4W

LOAD TYPES — blank or NON: NON-CONTINUOUS; LCL: LONG-CONTINUOUS; REC: DEMANDABLE RECEPT'S; KIT: KITCHEN; PNL: SUB-FED PNL; UNIT: RESID. UNIT; MTR: MOTOR

CKT	DESCRIPTION	LOAD TYPE	BKR	LOAD (VA) PH A	LOAD (VA) PH B	LOAD (VA) PH C	BKR	LOAD TYPE	DESCRIPTION	CKT
1	PANEL P3C	PNL	150/	11120	16061		50/	PNL	PANEL P3D	2
3	SAME AS CIRCUIT ABOVE	PNL	/		11030	14126	/	PNL	SAME AS CIRCUIT ABOVE	4
5	SAME AS CIRCUIT ABOVE	PNL	/3			10827	17117 /3	PNL	SAME AS CIRCUIT ABOVE	6
7	PANEL P3CX	PNL	150/	14820	6400		90/	PNL	PANEL P3E	8
9	SAME AS CIRCUIT ABOVE	PNL	/		14628	6400	/	PNL	SAME AS CIRCUIT ABOVE	10
11	SAME AS CIRCUIT ABOVE	PNL	/3			9940	6400 /3	PNL	SAME AS CIRCUIT ABOVE	12
13			20/1				20/1			14
15			20/1				20/1			16
17			20/1				20/1			18
19			20/1				20/1			20
21			20/1				20/1			22
23			20/1				20/1			24
25			20/1				20/1			26
27			20/1				20/1			28
29			20/1				20/1			30
31			20/1				20/1			32
33			20/1				20/1			34
35			20/1				20/1			36
37			20/1				20/1			38
39			20/1				20/1			40
41			20/1				20/1			42

	CONNECTED VA	DEMAND VA	PH A	PH B	PH C	
GEN'L LOAD:	37939	37939	48401	46184	44284	CONNECTED LOAD PER PHASE
LONG CONTIN.:	3602	4503		138869		TOTAL CONNECTED LOAD (VA)
GEN'L RECEPT:	62770	31385		386		AMPS OF TOTAL CONNECTED LOAD
MOTOR LOAD:	7586	+25% OF LARGEST		90537		TOTAL DEMAND VA (BALANCED)
KITCHEN LOAD:	12292	8604		296		HIGH PHASE AMPS/L-CL

PANEL NOTES:

PANEL ID: EM1 — NEW

LOCATION: MEZZ
MAIN: 70A/3P M.C.B.
BUS AMPS: 100
MOUNTING: SURFACE
AIC RATING:

FEEDER/SYSTEM — FED FROM: E; FEEDER OCP: 70 AMPS — SYSTEM: 480 /277V, 3-PH, 4W

LOAD TYPES — blank or NON: NON-CONTINUOUS; LCL: LONG-CONTINUOUS; REC: DEMANDABLE RECEPT'S; KIT: KITCHEN; PNL: SUB-FED PNL; UNIT: RESID. UNIT; MTR: MOTOR

CKT	DESCRIPTION	LOAD TYPE	BKR	LOAD (VA) PH A	LOAD (VA) PH B	LOAD (VA) PH C	BKR	LOAD TYPE	DESCRIPTION	CKT
1	LVL 100 & STAIR #4 EGRESS	LCL	20/1	828			20/	MTR	ELEVATOR Δ	2
3	256,259-262,265 EGRESS LTG	LCL	20/1		2132		/2	MTR	SAME AS CIRCUIT ABOVE	4
5	263,264,270,273,376,380-382 EGRESS LTG	LCL	20/1			1476	300 20/1	LCL	419 & 420 EGRESS LTG	6
7	245A-235C EGRESS LTG	LCL	20/1	1152	421		20/1	LCL	330,339,343,350 EGRESS	8
9	267,269,272,379,383 EGRESS	LCL	20/1		805	526	20/1	LCL	231,232,237A,237B,239,24 0, T222 EGRESS LTG	10
11	STUDENT CTR 237 EGRESS	REC	20/1			1136	15/	NON	LTS TRANS E-A	12
13	HALL 354 EGRESS LTG	LCL	20/1	1504			/2	NON	SAME AS CIRCUIT ABOVE	14
15	301,318,318A,319,331 EGRESS	LCL	20/1		1564	2923	20/	MTR	RAMP PUMP Δ	16
17	227, 227A-E, 406,406B, STAIR #1 & #2 EGRESS LTG	LCL	20/1			2632	2923 /	MTR	SAME AS CIRCUIT ABOVE	18
19	HALL 406A EGRESS LTG	LCL	20/1	703	2923		/2	MTR	SAME AS CIRCUIT ABOVE	20
21	EXTERIOR EGRESS LTG *	LCL	20/1		468	704	20/1	LCL	203-205,209,210 EGRESS	22
23	EXTERIOR EGRESS LTG *	LCL	20/1			468	704	20/1	LCL	213,215-217,221 EGRESS	24
25	EXTERIOR EGRESS LTG *	LCL	20/1	598	1500		15/	PNL	PANEL E1A VIA 'T-E1A'	26
27	EXTERIOR EGRESS LTG *	LCL	20/1		390	1080	/2	PNL	SAME AS CIRCUIT ABOVE	28
29	SPARE		20/1			1415	20/1	LCL	T200,T201,T219,T220,T300 EGRESS LTG	30
31	SPARE		20/1		850		20/1	LCL	T202-T204,T211-T213 EGRESS LTG	32
33	SPARE		20/1				20/1		SPARE	34
35	SPARE		20/1				20/1		SPARE	36
37	BUSSED SPACE						20/1		SPARE	38
39	BUSSED SPACE						20/1		SPARE	40
41	BUSSED SPACE						20/1		SPARE	42

	CONNECTED VA	DEMAND VA	PH A	PH B	PH C	
GEN'L LOAD:	2400	2400	10476	10592	11054	CONNECTED LOAD PER PHASE
LONG CONTIN.:	19640	24550		32125		TOTAL CONNECTED LOAD (VA)
GEN'L RECEPT:	1316	1316		39		AMPS OF TOTAL CONNECTED LOAD
MOTOR LOAD:	8769	+25% OF LARGEST		37766		TOTAL DEMAND VA (BALANCED)
KITCHEN LOAD:	0	0		49		HIGH PHASE AMPS/L-CL

PANEL NOTES:
Δ EXISTING LOAD TO BE RECONNECTED. CONTRACTOR TO FIELD VERIFY LOCATION AND INDICATE ON AS-BUILTS.
* ROUTE CIRCUIT VIA LIGHTING CONTROL PANEL 'LCPMB'.

PANEL ID: IDF1 — NEW

LOCATION: IDF-100A
MAIN: 60A/3P M.C.B.
BUS AMPS: 100
MOUNTING: SURFACE
AIC RATING:

FEEDER/SYSTEM — FED FROM: P1CA; FEEDER OCP: AMPS — SYSTEM: 208 /120V, 3-PH, 4W

LOAD TYPES — blank or NON: NON-CONTINUOUS; LCL: LONG-CONTINUOUS; REC: DEMANDABLE RECEPT'S; KIT: KITCHEN; PNL: SUB-FED PNL; UNIT: RESID. UNIT; MTR: MOTOR

CKT	DESCRIPTION	LOAD TYPE	BKR	LOAD (VA) PH A	LOAD (VA) PH B	LOAD (VA) PH C	BKR	LOAD TYPE	DESCRIPTION	CKT
1	INTRUSION CABINET	NON	20/1	360	360		20/1		IDF-100A	2
3	CATV CABINET, CCTV CONTROLLER	NON	20/1		720	360	20/1		IDF-100A	4
5	RACK 1	NON	20/1			540	360	20/1		IDF-100A	6
7	RACK 2	NON	20/1	540	360		20/1		IDF-100A	8
9	SPARE		20/1				20/1		SPARE	10
11	SPARE		20/1				20/1		SPARE	12
13	SPARE		20/1				20/1		SPARE	14
15	SPARE		20/1				20/1		SPARE	16
17	SPARE		20/1				20/1		SPARE	18

	CONNECTED VA	DEMAND VA	PH A	PH B	PH C	
GEN'L LOAD:	3600	3600	1620	1080	900	CONNECTED LOAD PER PHASE
LONG CONTIN.:	0	0		3600		TOTAL CONNECTED LOAD (VA)
GEN'L RECEPT:	0	0		10		AMPS OF TOTAL CONNECTED LOAD
MOTOR LOAD:	0	+25% OF LARGEST		3600		TOTAL DEMAND VA (BALANCED)
KITCHEN LOAD:	0	0		14		HIGH PHASE AMPS/L-CL

PANEL NOTES:

PANEL ID: MDF — NEW

LOCATION: MDF 222
MAIN: 60A/3P M.C.B.
BUS AMPS: 100
MOUNTING: SURFACE
AIC RATING:

FEEDER/SYSTEM — FED FROM: P2E; FEEDER OCP: AMPS — SYSTEM: 208 /120V, 3-PH, 4W

LOAD TYPES — blank or NON: NON-CONTINUOUS; LCL: LONG-CONTINUOUS; REC: DEMANDABLE RECEPT'S; KIT: KITCHEN; PNL: SUB-FED PNL; UNIT: RESID. UNIT; MTR: MOTOR

CKT	DESCRIPTION	LOAD TYPE	BKR	LOAD (VA) PH A	LOAD (VA) PH B	LOAD (VA) PH C	BKR	LOAD TYPE	DESCRIPTION	CKT
1	INTRUSION CABINET	NON	20/1	360	360		20/1	NON	MDF-222	2
3	CATV CABINET, CCTV CONTROLLER	NON	20/1		540	360	20/1	NON	MDF-222	4
5	RACK 1	NON	20/1			540	360	20/1	NON	MDF-222	6
7	RACK 2	NON	20/1	540	360		20/1	NON	MDF-222	8
9	RACK 3	NON	20/1		540	432	20/1	MTR	EF-19	10
11	FSD Ω	NON	20/1			1100	1747	25/	FCU-2	12
13	FSD Ω	NON	20/1	850	1747		/2		SAME AS CIRCUIT ABOVE	14
15	SPARE		20/1				20/1		SPARE	16
17	SPARE		20/1				20/1		SPARE	18

	CONNECTED VA	DEMAND VA	PH A	PH B	PH C	
GEN'L LOAD:	9404	9404	4217	1872	3747	CONNECTED LOAD PER PHASE
LONG CONTIN.:	0	0		9836		TOTAL CONNECTED LOAD (VA)
GEN'L RECEPT:	0	0		27		AMPS OF TOTAL CONNECTED LOAD
MOTOR LOAD:	432	+25% OF LARGEST		9944		TOTAL DEMAND VA (BALANCED)
KITCHEN LOAD:	0	0		35		HIGH PHASE AMPS/L-CL

PANEL NOTES:
Ω SEE DETAIL 1/EF-001

SCHEDULE KEY

MSB	DP1	DP2	DP3
PP1	PP1A	PP1B	PP2
PP3	EM1	IDF-1	MDF

TURPIN & RATTAN Engineering, Inc.
Consulting Engineers
4719 PALM AVENUE
LA MESA, CA 91941-5221
619 / 466 / 6224 fax 466 / 6233
E-MAIL: engineer@treisd.com
TREI # 09219.07

m-riggs 05/28/15 - 1:34pm
G:\09\09219.07\09219.07\Acadproj\09219.07_E-601 PANEL SCHEDULE.dwg

g:\09\09219.07\09219.07\acadproj\09219.07_e-601 panel schedule.dwg - 5/28/2015 1:34 PM - marie riggs

PREPARED FOR THE
GROSSMONT UNION HIGH SCHOOL DISTRICT
P.O.BOX 1043
LA MESA, CALIFORNIA

PREPARED BY
PLATT/WHITELAW ARCHITECTS, INC.
4034 30TH STREET
SAN DIEGO, CA (619)546-4326 FAX (619)546-4350

IDENTIFICATION STA

PANEL ID: E1A — NEW

LOCATION: MEZZ.
MAIN: 30A/2P M.C.B.
BUS AMPS: 100
MOUNTING: SURFACE
AIC RATING: 10K

FEEDER/SYSTEM
FED FROM: EM1 =EM1R2C
FEEDER OCP: 15 AMPS
SYSTEM: 240 /120V, 1-PH, 3W

LOAD TYPES
blank or NON: NON-CONTINUOUS
LCL: LONG-CONTINUOUS
REC: DEMANDABLE RECEPT'S
KIT: KITCHEN PNL: SUB-FED PNL
UNIT: RESD. UNIT MTR: MOTOR

CKT	DESCRIPTION	LOAD TYPE	BKR	LOAD (VA) PH. A		LOAD (VA) PH.B		BKR	LOAD TYPE	DESCRIPTION	CKT
1	DAMPER	NON	15/1	200	500			20/1	NON	FIRE ALARM	2
3	RECEPTACLE	REC	15/1			180	500	20/1	NON	FIRE ALARM	4
5	CLOCK	NON	15/1	300	500			20/1	NON	FIRE ALARM	6
7	DMX EMERGENCY BYPASS CONTROLLER	NON	20/1			100	300	20/1	NON	M/C	8

	CONNECTED VA	DEMAND VA	PH A	PH B	
GEN'L LOAD:	2400	2400	1500	1080	CONNECTED LOAD PER PHASE
LONG CONTIN.:	0	0	2580		TOTAL CONNECTED LOAD (VA)
GEN'L RECEPT:	180	180	11		AMPS OF TOTAL CONNECTED LOAD
MOTOR LOAD:	0	+ 25% OF LARGEST	2580		TOTAL DEMAND VA (BALANCED)
KITCHEN LOAD:	0	0	13		HIGH PHASE AMPS/L CL

PANEL NOTES:

PANEL ID: E — EXISTING

LOCATION: E. YARD
MAIN: 100A/3P M.C.B.
BUS AMPS: 100
MOUNTING: SURFACE
AIC RATING: 65KA

FEEDER/SYSTEM
FED FROM: MSB
FEEDER OCP: AMPS
SYSTEM: 480 /277V, 3-PH, 4W

LOAD TYPES
blank or NON: NON-CONTINUOUS
LCL: LONG-CONTINUOUS
REC: DEMANDABLE RECEPT'S
KIT: KITCHEN PNL: SUB-FED PNL
UNIT: RESD. UNIT MTR: MOTOR

CKT	DESCRIPTION	LOAD TYPE	BKR	LOAD (VA) PH. A		LOAD (VA) PH.B		LOAD (VA) PH.C		BKR	LOAD TYPE	DESCRIPTION	CKT
1			20/1		10479					50/	PNL	PANEL EM-1	2
3			20/1				10592			/	PNL	SAME AS CIRCUIT ABOVE	4
5			20/1						11054	/3	PNL	SAME AS CIRCUIT ABOVE	6
7			20/1							20/1			8
9			20/1							20/1			10
11			20/1							20/1			12
13			20/1							20/1			14
15			20/1							20/1			16
17			20/1							20/1			18
19			20/1							20/1			20
21			20/1							20/1			22
23			20/1							20/1			24

	CONNECTED VA	DEMAND VA	PH A	PH B	PH C	
GEN'L LOAD:	2400	2400	10479	10592	11054	CONNECTED LOAD PER PHASE
LONG CONTIN.:	19640	24550	32125			TOTAL CONNECTED LOAD (VA)
GEN'L RECEPT:	1316	1316	39			AMPS OF TOTAL CONNECTED LOAD
MOTOR LOAD:	8769	+25% OF LARGEST	37766			TOTAL DEMAND VA (BALANCED)
KITCHEN LOAD:	0	0	49			HIGH PHASE AMPS/L CL

PANEL NOTES:

PANEL ID: L1A — NEW

LOCATION: MEZZ
MAIN: 200A/3P M.C.B.
BUS AMPS: 225
MOUNTING: SURFACE
AIC RATING

FEEDER/SYSTEM
FED FROM: DP1
FEEDER OCP: 200 AMPS
SYSTEM: 480 /277V, 3-PH, 4W

LOAD TYPES
blank or NON: NON-CONTINUOUS
LCL: LONG-CONTINUOUS
REC: DEMANDABLE RECEPT'S
KIT: KITCHEN PNL: SUB-FED PNL
UNIT: RESD. UNIT MTR: MOTOR

CKT	DESCRIPTION	LOAD TYPE	BKR	LOAD (VA) PH. A		LOAD (VA) PH.B		LOAD (VA) PH.C		BKR	LOAD TYPE	DESCRIPTION	CKT
1	213-215,219,220 LIGHTING	LCL	20/1	2029						20/1		SPARE	2
3	216-218,222,222A LIGHTING	LCL	20/1			2030				20/1		SPARE	4
5	201-204 LIGHTING	LCL	15/1					2105		20/1		SPARE	6
7	205-209,210 LIGHTING	LCL	20/1	2029						20/1		SPARE	8
9	211 & 212 LIGHTING	LCL	20/1			1206				20/1		SPARE	10
11	223 & 225 LIGHTING	LCL	20/1					1206		20/1		SPARE	12
13	BUSSED SPACE											BUSSED SPACE	14
15	BUSSED SPACE											BUSSED SPACE	16
17	BUSSED SPACE											BUSSED SPACE	18
19	BUSSED SPACE											BUSSED SPACE	20
21	BUSSED SPACE											BUSSED SPACE	22
23	BUSSED SPACE											BUSSED SPACE	24
25	BUSSED SPACE											BUSSED SPACE	26
27	BUSSED SPACE											BUSSED SPACE	28
29	BUSSED SPACE											BUSSED SPACE	30
31	BUSSED SPACE											BUSSED SPACE	32
33	BUSSED SPACE											BUSSED SPACE	34
35	BUSSED SPACE											BUSSED SPACE	36
37	BUSSED SPACE				1276					15/	MTR	EF-14	38
39	BUSSED SPACE						1276			/	MTR	SAME AS CIRCUIT ABOVE	40
41	BUSSED SPACE								1276	/3	MTR	SAME AS CIRCUIT ABOVE	42

	CONNECTED VA	DEMAND VA	PH A	PH B	PH C	
GEN'L LOAD:	0	0	5334	4512	4587	CONNECTED LOAD PER PHASE
LONG CONTIN.:	10605	13256	14433			TOTAL CONNECTED LOAD (VA)
GEN'L RECEPT:	0	0	17			AMPS OF TOTAL CONNECTED LOAD
MOTOR LOAD:	3828	+25% OF LARGEST	17403			TOTAL DEMAND VA (BALANCED)
KITCHEN LOAD:	0	0	24			HIGH PHASE AMPS/L CL

PANEL NOTES:

PANEL ID: L1C — NEW

LOCATION: MECHANICAL 119
MAIN: 150A/3P M.C.B.
BUS AMPS: 225
MOUNTING: SURFACE
AIC RATING

FEEDER/SYSTEM
FED FROM: DP1
FEEDER OCP: 150 AMPS
SYSTEM: 480 /277V, 3-PH, 4W

LOAD TYPES
blank or NON: NON-CONTINUOUS
LCL: LONG-CONTINUOUS
REC: DEMANDABLE RECEPT'S
KIT: KITCHEN PNL: SUB-FED PNL
UNIT: RESD. UNIT MTR: MOTOR

CKT	DESCRIPTION	LOAD TYPE	BKR	LOAD (VA) PH. A		LOAD (VA) PH.B		LOAD (VA) PH.C		BKR	LOAD TYPE	DESCRIPTION	CKT
1	AH-KK	MTR	30/	4040	15220					100	PNL	TRANSFORMER T-2	2
3	SAME AS CIRCUIT ABOVE	MTR	/			4040	15390			/	PNL	SAME AS CIRCUIT ABOVE	4
5	SAME AS CIRCUIT ABOVE	MTR	/3					4040	13842	/3	PNL	SAME AS CIRCUIT ABOVE	6
7	AH-KK	MTR	30/	4040	1333					15/		EWH-6	8
9	SAME AS CIRCUIT ABOVE	MTR	/			4040	1333			/		SAME AS CIRCUIT ABOVE	10
11	SAME AS CIRCUIT ABOVE	MTR	/3					4040	1333	/3		SAME AS CIRCUIT ABOVE	12
13	SUMP PUMP Δ	MTR	30/	3733	7166					50/	MTR	AH-AA Δ	14
15	SAME AS CIRCUIT ABOVE	MTR	/			3733	7166			/	MTR	SAME AS CIRCUIT ABOVE	16
17	SAME AS CIRCUIT ABOVE	MTR	/3					3733	7166	/3	MTR	SAME AS CIRCUIT ABOVE	18
19	SPARE		20/1		1684					20/1	LCL	101-103,114,119 LIGHTING	20
21	SPARE		20/1				1959			20/1	LCL	104-106,109,122 LIGHTING	22
23	SPARE		20/1						1946	20/1	LCL	107,108,110-113,121 LTG	24
25	SPARE		20/1							20/1		SPARE	26
27	SPARE		20/1							20/1		SPARE	28
29	SPARE		20/1						1850	20/1	LCL	LEVEL 100 & STAIR #4 LTG	30
31	BUSSED SPACE											BUSSED SPACE	32
33	BUSSED SPACE											BUSSED SPACE	34
35	BUSSED SPACE											BUSSED SPACE	36
37	BUSSED SPACE											BUSSED SPACE	38
39	BUSSED SPACE											BUSSED SPACE	40
41	BUSSED SPACE											BUSSED SPACE	42

	CONNECTED VA	DEMAND VA	PH A	PH B	PH C	
GEN'L LOAD:	13999	13999	37216	37661	37950	CONNECTED LOAD PER PHASE
LONG CONTIN.:	9799	12249	112827			TOTAL CONNECTED LOAD (VA)
GEN'L RECEPT:	31160	20580	136			AMPS OF TOTAL CONNECTED LOAD
MOTOR LOAD:	57369	+25% OF LARGEST	105988			TOTAL DEMAND VA (BALANCED)
KITCHEN LOAD:	0	0	149			HIGH PHASE AMPS/L CL

PANEL NOTES:

Δ EXISTING LOAD TO BE RECONNECTED. CONTRACTOR TO FIELD VERIFY LOCATION AND INDICATE ON AS-BUILTS.

(LEVEL 400 MEZANINE) (CIRCUIT L2B-9)

LIGHTING CONTROL PANEL 'LCPMB'

RELAY	CIRCUIT	AREA SERVED	DAYS *	ON *	OFF *
1	EM1-21	LEVEL 100 HALL	EVERY DAY	DUSK	23:00
2	EM1-23	HALL 245	EVERY DAY	DUSK	DAWN
3	EM1-25	STUDENT CENTER 237 POLE LIGHTS	EVERY DAY	DUSK	23:00
4	EM1-27	STUDENT CENTER 237	EVERY DAY	DUSK	DAWN
5	.	.	.	.	.
6	.	.	.	.	.
7	.	.	.	.	.
8	.	.	.	.	.
9	.	.	.	.	.
10	.	.	.	.	.
11	.	.	.	.	.
12	.	.	.	.	.
13	.	.	.	.	.
14	.	.	.	.	.
15	.	.	.	.	.
16	.	.	.	.	.
17	.	.	–	–	–
18	.	.	–	–	–
19	.	.	–	–	–
20	.	.	–	–	–
21	.	.	–	–	–
22	.	.	–	–	–
23	.	.	–	–	–
24	.	.	–	–	–

CONTRACTOR SHALL PROVIDE A PROGRAMMABLE LOW VOLTAGE LIGHTING CONTROL SYSTEM COMPLYING WITH ALL REQUIREMENTS OF CALIFORNIA TITLE 24 AND COMPATIBLE WITH THE EXISTING LIGHTING CONTROL SYSTEM. PROVIDE RELAYS AND PROGRAMMING AS INDICATED.

* SET CONTROL POINTS PER DISTRICT'S REPRESENTATIVE.

PANEL ID: L2A — NEW

LOCATION: MEZZ
MAIN: 100A/3P M.C.B.
BUS AMPS: 100
MOUNTING: SURFACE
AIC RATING

FEEDER/SYSTEM
FED FROM: DP2
FEEDER OCP: 100 AMPS
SYSTEM: 480 /277V, 3-PH, 4W

LOAD TYPES
blank or NON: NON-CONTINUOUS
LCL: LONG-CONTINUOUS
REC: DEMANDABLE RECEPT'S
KIT: KITCHEN PNL: SUB-FED PNL
UNIT: RESD. UNIT MTR: MOTOR

CKT	DESCRIPTION	LOAD TYPE	BKR	LOAD (VA) PH. A		LOAD (VA) PH.B		LOAD (VA) PH.C		BKR	LOAD TYPE	DESCRIPTION	CKT
1	237B,238-244 LIGHTING	LCL	20/1	1383	2348					20/1	LCL	HALL 245A-245C LIGHTING	2
3	230-235,237A LIGHTING	LCL	20/1			936	995			20/1	LCL	T202-T204,T211-T213,T221 LIGHTING	4
5	343,348-353,359,360,363-364A LIGHTING	LCL	20/1					1627	2840	20/1	LCL	STUDENT CTR 237 LINEARS	6
7	332,332A,337-341,355-358 LTG	LCL	20/1	1244	3046					20/1	LCL	HALL 354 LIGHTING	8
9	UNDESIG. SPACE 224 LTG	LCL	20/1			408	2423			20/1	LCL	407-414,416 LIGHTING	10
11	T214-T218,T222LTG,T200,T203,	LCL	20/1					609	1659	20/1	LCL	415,417,419-421 LIGHTING	12
13	T205 - T210 LIGHTING, T202 & T204 EXITS	LCL	20/1	558	240					20/1	LCL	HOUSE T200 CATWALK STRIP LIGHTS	14
15	T200,T219,T200 LIGHTING	LCL	20/1			1602	424			20/1	LCL	STUDENT CTR 237 SCONCES	16
17	STAGE T201 STRIP LIGHTS	LCL	20/1					680	140	20/1	LCL	CONTROL ROOM T300 DOWNLIGHTS	18
19	HOUSE T200 STEP LIGHTS	LCL	20/1	64	32					20/1	LCL	CONTROL ROOM T300 STEP LIGHTS	20
21	BACK STAGE T204 STRIP LIGHTS	LCL	20/1			520	1104			20/1	LCL	THEATER FAÇADE UPLIGHTS	22
23	HOUSE T200 COVE LIGHTING	LCL	20/1					661	144	20/1	LCL	HOUSE T200 STEP RISER LIGHTS	24
25	SPARE	LCL	20/1							20/1		SPARE	26
27	T202,T203,T211 STRIP LIGHTS	LCL	20/1			320				20/	PNL	CONTROL TRANSFORMER Δ	28
29	SIDE STAGE T221 STRIP LIGHTS	LCL	20/1					480		/2	PNL	SAME AS CIRCUIT ABOVE	30
31	SPARE		20/1							30/1	NON	TC-1 Δ	32
33	SPARE		20/1							20/1		SPARE	34
35	SPARE		20/1							20/1		SPARE	36
37	THEATER EMERGENCY BYPASS DETECTION KIT	NON	15/							20/1		SPARE	38
39	SAME AS CIRCUIT ABOVE	NON	/							20/1		SPARE	40
41	SAME AS CIRCUIT ABOVE	NON	/3							20/1		SPARE	42

	CONNECTED VA	DEMAND VA	PH A	PH B	PH C	
GEN'L LOAD:	0	0	8915	8732	8840	CONNECTED LOAD PER PHASE
LONG CONTIN.:	26487	33109	26487			TOTAL CONNECTED LOAD (VA)
GEN'L RECEPT:	0	0	32			AMPS OF TOTAL CONNECTED LOAD
MOTOR LOAD:	0	+25% OF LARGEST	33109			TOTAL DEMAND VA (BALANCED)
KITCHEN LOAD:	0	0	46			HIGH PHASE AMPS/L CL

PANEL NOTES:

Δ EXISTING LOAD TO BE RECONNECTED. CONTRACTOR TO FIELD VERIFY LOCATION AND INDICATE ON AS-BUILTS.

PANEL ID: L2B — NEW

LOCATION: MEZZ
MAIN: 100A/3P M.C.B.
BUS AMPS: 100
MOUNTING: SURFACE
AIC RATING

FEEDER/SYSTEM
FED FROM: DP2
FEEDER OCP: 100 AMPS
SYSTEM: 480 /277V, 3-PH, 4W

LOAD TYPES
blank or NON: NON-CONTINUOUS
LCL: LONG-CONTINUOUS
REC: DEMANDABLE RECEPT'S
KIT: KITCHEN PNL: SUB-FED PNL
UNIT: RESD. UNIT MTR: MOTOR

CKT	DESCRIPTION	LOAD TYPE	BKR	LOAD (VA) PH. A		LOAD (VA) PH.B		LOAD (VA) PH.C		BKR	LOAD TYPE	DESCRIPTION	CKT
1	227A-227E LIGHTING	LCL	20/1	756	3312					20/1	LCL	301,318,318A,319,331 LTG	2
3	QUIET STUDY 227 POLES & SCONCES	LCL	20/1			2120	2104			20/1	LCL	320-330 LIGHTING	4
5	229A & 229B LIGHTING	LCL	20/1					978	2821	20/1	LCL	301 DISPLAY CASES & 302-308 LIGHTING	6
7	LIGHT CONTROL SWITCH Δ		20/1		2312					20/1	LCL	309-317 LIGHTING	8
9	LTG CONTROL PNL 'LCPMB'	NON	20/1			500	3060			20/1	LCL	227, STAIR #1 & #2 LTG	10
11	401-405 LTG, CORRIDOR 404 BACKLIT GLASS LTG	LCL	20/1					1772	2830	20/1	LCL	QUIET STUDY 227 LINEARS	12
13	MEZZANINE STRIP LIGHTING	LCL	20/1	1950	1414					20/1	LCL	HALL 406A LIGHTING	14
15	SPARE		20/1				808			20/1	LCL	HALL 209 & 221 LIGHTING	16
17	SPARE		20/1							20/1		SPARE	18
19	SPARE		20/1							20/1		SPARE	20
21	SPARE		20/1							20/1		SPARE	22
23	SPARE		20/1							20/1		SPARE	24
25	BUSSED SPACE											BUSSED SPACE	26
27	BUSSED SPACE											BUSSED SPACE	28
29	BUSSED SPACE											BUSSED SPACE	30
31	BUSSED SPACE											BUSSED SPACE	32
33	BUSSED SPACE											BUSSED SPACE	34
35	BUSSED SPACE											BUSSED SPACE	36
37	NITE LIGHTS Δ	LCL	20/		1276					15/	MTR	EF-23	38
39	SAME AS CIRCUIT ABOVE	LCL	/				1276			/	MTR	SAME AS CIRCUIT ABOVE	40
41	SAME AS CIRCUIT ABOVE	LCL	/3						1276	/3	MTR	SAME AS CIRCUIT ABOVE	42

	CONNECTED VA	DEMAND VA	PH A	PH B	PH C	
GEN'L LOAD:	500	500	11020	9865	9677	CONNECTED LOAD PER PHASE
LONG CONTIN.:	26237	32796	30565			TOTAL CONNECTED LOAD (VA)
GEN'L RECEPT:	0	0	37			AMPS OF TOTAL CONNECTED LOAD
MOTOR LOAD:	3828	+25% OF LARGEST	37443			TOTAL DEMAND VA (BALANCED)
KITCHEN LOAD:	0	0	50			HIGH PHASE AMPS/L CL

PANEL NOTES:

Δ EXISTING LOAD TO BE RECONNECTED. CONTRACTOR TO FIELD VERIFY LOCATION AND INDICATE ON AS-BUILTS.

PANEL ID: L3A — NEW

LOCATION: ELECTRICAL 268
MAIN: 150A/3P M.C.B.
BUS AMPS: 225
MOUNTING: SURFACE
AIC RATING

FEEDER/SYSTEM
FED FROM: DP3
FEEDER OCP: 200 AMPS
SYSTEM: 480 /277V, 3-PH, 4W

LOAD TYPES
blank or NON: NON-CONTINUOUS
LCL: LONG-CONTINUOUS
REC: DEMANDABLE RECEPT'S
KIT: KITCHEN PNL: SUB-FED PNL
UNIT: RESD. UNIT MTR: MOTOR

CKT	DESCRIPTION	LOAD TYPE	BKR	LOAD (VA) PH. A		LOAD (VA) PH.B		LOAD (VA) PH.C		BKR	LOAD TYPE	DESCRIPTION	CKT
1	FC-3	MTR	15/	1660	2858					20/1	LCL	250-251B,256A-D,258-260A LIGHTING	2
3	SAME AS CIRCUIT ABOVE	MTR	/			1660	3155			20/1	LCL	247-249B,254-257 LIGHTING	4
5	SAME AS CIRCUIT ABOVE	MTR	/3					1660	1467	20/1	LCL	241-242B,263A,265A,265C LIGHTING	6
7	SPARE		20/1		1424					20/1	LCL	HALL 263,264,376 LIGHTING	8
9	SPARE		20/1				1768			20/1	LCL	HALL 270,273,380-382 LIGHTING	10
11	SPARE		20/1						1954	20/1	LCL	252A,B,253A,B,269,271,272 LIGHTING	12
13	BUSSED SPACE				2206					20/1	LCL	265B,266-268,269A,269B,269E	14
15	BUSSED SPACE						2243			20/1	LCL	377-379A,383 LIGHTING	16
17	BUSSED SPACE								2763	20/1	LCL	WOOD SHOP 265 LIGHTING	18
19	BUSSED SPACE											BUSSED SPACE	20
21	BUSSED SPACE											BUSSED SPACE	22
23	BUSSED SPACE											BUSSED SPACE	24
25	BUSSED SPACE											BUSSED SPACE	26
27	BUSSED SPACE											BUSSED SPACE	28
29	BUSSED SPACE											BUSSED SPACE	30
31	BUSSED SPACE											BUSSED SPACE	32
33	BUSSED SPACE											BUSSED SPACE	34
35	BUSSED SPACE											BUSSED SPACE	36
37	BUSSED SPACE											BUSSED SPACE	38
39	BUSSED SPACE						200			15/	PNL	PANEL 'CLP'	40
41	BUSSED SPACE								250	/2	PNL	SAME AS CIRCUIT ABOVE	42

	CONNECTED VA	DEMAND VA	PH A	PH B	PH C	
GEN'L LOAD:	0	0	8148	9026	8094	CONNECTED LOAD PER PHASE
LONG CONTIN.:	19838	24798	25268			TOTAL CONNECTED LOAD (VA)
GEN'L RECEPT:	0	0	35			AMPS OF TOTAL CONNECTED LOAD
MOTOR LOAD:	4980	+25% OF LARGEST	30193			TOTAL DEMAND VA (BALANCED)
KITCHEN LOAD:	0	0	40			HIGH PHASE AMPS/L CL

PANEL NOTES:

1. PROVIDE LOOP-FEED LUGS.

SCHEDULE KEY

E1A	E	L1A	L1C
LCPMB	L2A	L2B	L3A

TURPIN & RATTAN
Engineering, Inc.
Consulting Engineers
4719 PALM AVENUE
LA MESA, CA 91941-5221
619 / 466 / 6224 fax 466 / 6233
E-MAIL: engineer@treisd.com
TREI # 09219.07

m.riggs 05/28/15 - 1:34pm
G:\09\09219.07\09219.07\Acadproj\09219.07_E-602 PANEL SCHEDULE.dwg

PREPARED FOR THE
GROSSMONT UNION HIGH SCHOOL DISTRICT
P.O.BOX 1043
LA MESA, CALIFORNIA

PREPARED BY
PLATT/WHITELAW ARCHITECTS, INC.
4034 30TH STREET
SAN DIEGO, CA (619)546-4326 FAX (619)546-4350

IDENTIFICATION STAMP
DIV. OF THE STATE ARCHITECT
OFFICE OF REGULATION SERVICES
04-113708
FILE # 37H4
AC FLS SS
DATE

REGISTERED PROFESSIONAL ENGINEER MARK A. RIGGS 19334 Exp. 12-31-16 STATE OF CALIFORNIA
01/23/15

REGISTERED ARCHITECT R. M. WHITELAW C-13375 EXP. 7-31-15 STATE OF CALIFORNIA

PANEL SCHEDULES

MAIN BUILDING FULL MODERNIZATION

VALHALLA HIGH SCHOOL
1725 HILLSDALE ROAD
EL CAJON, CA 92019

REVISION	DATE
1 ADDENDUM 1	3/26/15

index

PROJECT NO. PWA 0361.4
FILE NAME:
DATE: JAN 15, 2015 DRAWN: PS/HL CHECKED: MR

E-602

SHEET NO. : - OF - SHEETS

g:\09\09219.07\09219.07\acadproj\09219.07_e-602 panel schedule.dwg - 5/28/2015 1:34 PM - mark riggs