PART IX

STANDARD DRAWINGS, STANDARD PLANS AND PROJECT PLANS

STANDARD DRAWINGS AND SPECIFICATIONS:

-CALTRANS 2018 STANDARD SPECIFICATIONS BOOK
https://dot.ca.gov/-/media/dot-media/programs/design/documents/2018-stdspecs.pdf

-CALTRANS 2018 REVISED STANDARD PLANS
https://dot.ca.gov/-/media/dot-media/programs/design/documents/rss-a10-18-19-2018.pdf

-Water Agencies' Standard Design Guidelines (WADG)
http://www.sdwas.org/Standard-Specifications

-San Diego Area Regional Standard Drawings
http://www.regional-stds.com/home/book/drawings

PROJECT PLANS (CIVIL PLAN SET AND BUILDING PLAN SET):

CIVIL PLAN SET:

INDEX OF SHEETS

No.	Sheet	Description
1	G–1	COVER SHEET
2	G–2	NOTES & LEGEND
3	G–3	KEY MAP
4	C–1	EXISTING PROPERTY LINES & EASEMENTS
5	C–2	EXISTING UTILITIES (MORENO AVENUE)
6	C–3	DEMOLITION PLAN
7	C–4	INTERSECTION DETAILS
8	C–5	SITE PLAN (FOR CONSTRUCTION)
9	C–6	GRADING PLAN
10	C–7	CIVIL DETAILS (TYPICAL SECTIONS)
11	C–8	CIVIL DETAILS (TYPICAL SECTIONS)
12	C–9	CIVIL DETAILS (BOX CULVERT AREA)
13	C–10	CIVIL DETAILS (BIOFILTRATION BASIN 1 AREA)
14	C–11	CIVIL DETAILS (BIOFILTRATION BASIN 2 AREA)
15	C–12	CIVIL DETAILS (BIOFILTRATION BASIN 3 AREA)
16	U–1	UTILITY DISTRIBUTION (WATER, SEWER, GAS)
17	U–2	POINT OF CONNECTION DETAILS
18	EC–1	EROSION CONTROL PLAN
19	EC–2	EROSION CONTROL DETAILS
20	ME–1	SUMP PUMP PLAN AND DETAILS
21	E–1	STANDARD ELECTRICAL SYMBOLS AND ABBREVIATIONS
22	E–2	SITE ELECTRICAL PLAN
23	E–3	SINGLE LINE DIAGRAM
24	E–4	CONDUIT/CABLE SCHEDULE AND PANEL SCHEDULE
25	E–5	BUILDING PANEL SCHEDULES
26	E–6	ELECTRICAL DETAILS
27	E–7	LIGHT FIXTURE SCHEDULE AND DETAILS
28	LP–1	LANDSCAPE PLAN
29	LP–2	PLANT LEGEND AND DETAILS
30	LI–1	IRRIGATION PLAN
31	LI–2	IRRIGATION LEGENDS
32	LI–3	IRRIGATION DETAILS
33	LI–4	IRRIGATION DETAILS
34	LI–5	IRRIGATION CALCULATIONS

BUILDING PLAN SET:

OVERALL SHEET INDEX:

ARCHITECTURAL

A 0.0.0 Buildings & Amenities Cover Sheet
A 0.0.1 Overall Sheet Index
A 0.0.2 Overall Site Plan

STRUCTURAL

S 0.0.1 Typical Structural Details

AREA 1 SHEET INDEX:

ARCHITECTURAL

A 1.0.0 Area 1 Site Plan
A 1.0.1 Floor Plan - Covered Arena
A 1.0.2 Elevations - Covered Arena
A 1.0.3 3D Roof Plan - Covered Arena
A 1.1.1 Floor Plan - Meeting Room
A 1.1.2 Enlarged Floor Plan - Meeting Room
A 1.1.3 Elevations/ Sections - Meeting Room
A 1.2.1 Floor Plan/ Foundation Plan/ Elevations - Restrooms
A 1.3.1 Dumpster Area Floor Plan/ Elevations
A 1.4.1 Floor / Second Floor Plans - Announcers Booth
A 1.4.2 Elevations/ Sections - Announcers Booth
A 1.6.1 Electronic Scoreboard Details
A 1.7.1 Floor Plan - Bleachers
A 1.7.2 Elevations/ Sections - Bleachers
A 1.8.1 Floor Plan - Patio Area

FOOD SERVICE

FS 1.1.1 Food Service Equipment & Schedule
FS - H1 Hood Drawings & Specifications
FS - H2 Hood Drawings & Specifications
FS - H3 Hood Drawings & Specifications

MECHANICAL

M 0.0.1 Mechanical Legend and Notes
M 0.0.2 Mechanical Schedule
M 0.0.3 Mechanical Details
M 0.0.4 Mechanical Details
M 1.1.1 Mechanical Floor Plan Meeting Room
M 1.1.2 Mechanical Roof Plan
M 1.1.3 Mechanical Ventilation Calculation

ELECTRICAL

E 1.0.0 Standard Electrical Symbols and Abbreviations
E 1.0.1 Covered Arena Electrical Plan
E 1.1.1 Meeting Room Lighting Plan
E 1.1.2 Meeting Room Power Plan
E 1.2.1 Restrooms Power & Lighting Plans
E 1.4.1 Announcers Booth Electrical Plans

PLUMBING

P 0.0.0 Plumbing Legend and Notes
P 0.0.1 Plumbing Schedules
P 0.0.3 Plumbing Details
P 1.1.1 Plumbing Floor Plan - Waste
P 1.1.2 Plumbing Floor Plan - Waste
P 1.1.3 Plumbing Diagrams
P 1.2.1 Restroom Plumbing Plans/ Diagrams

AREA 2 SHEET INDEX:

ARCHITECTURAL

A 2.0.0 Area 1 Site Plan
A 2.1.1 Floor Plan - Shade Structure
A 2.1.2 Elevations/ Sections - Shade Structure
A 2.4.1 Covered Viewing Box Details

AREA 3 SHEET INDEX:

ARCHITECTURAL

A 3.1.0 Area 3 Site Plan
A 3.1.1 Floor Plan/ Roof Plan - Coral Shade Structure
A 3.1.2 Elevations/ Sections - Coral Shade Structure
A 3.2.1 Floor Plan - Compost Area
A 3.2.2 Elevations/ Sections - Compost Area
A 3.3.1 Details - Water Truck Filling Station

AREA 4 SHEET INDEX:

ARCHITECTURAL

A 4.1.0 Area 4 Site Plan
A 4.1.1 Floor Plan/ Foundation Plan - Shop Storage
A 4.1.2 Elevations/ Sections - Shop Storage
A 4.2.1 Floor Plan/ Foundation Plan - Host Pad Shade
A 4.2.2 Elevations/ Sections - Host Pad Shade

ELECTRICAL

E 4.1.1 Shop Storage Power and Lighting Plans

AREA 5 SHEET INDEX:

ARCHITECTURAL

A 5.1.0 Area 5 Site Plan
A 5.1.1 Floor Plan - Shade Structure Pavilion
A 5.2.1 Picnic Tables - Details
A 5.2.2 Trash/ Recycle - Details
A 5.3.1 Trash Bin For Horse Manure

AREA 6 SHEET INDEX:

ARCHITECTURAL

A 6.1.0 Area 6 Site Plan
A 6.3.1 Details - County Signage Monument
A 6.4.1 Entry Gate - Details

-1 0 1 2 3 4 5 6 7 8 9 10

FOR REDUCED PLANS
ORIGINAL SCALE IS IN INCHES

REGISTERED PROFESSIONAL ENGINEER
DON BLOODWORTH
No. 60964
CIVIL
STATE OF CALIFORNIA

KLEINFELDER
Bright People. Right Solutions.

PLANS PREPARED BY:
FIRM NAME: KLEINFELDER
FIRM ADDRESS: 550 W C ST. #1200, SAN DIEGO, CA 92101
FIRM PHONE NUMBER: (619) 831-4600

COUNTY OF SAN DIEGO, CALIFORNIA
DEPARTMENT OF PARKS AND RECREATION

PLANS FOR CONSTRUCTION OF LAKESIDE EQUESTRIAN FACILITY

INDEX OF SHEETS

No.	Sheet	Description
1	G-1	COVER SHEET
2	G-2	NOTES & LEGEND
3	G-3	KEY MAP
4	C-1	EXISTING PROPERTY LINES & EASEMENTS
5	C-2	EXISTING UTILITIES (MORENO AVENUE)
6	C-3	DEMOLITION PLAN
7	C-4	INTERSECTION DETAILS
8	C-5	SITE PLAN (FOR CONSTRUCTION)
9	C-6	GRADING PLAN
10	C-7	CIVIL DETAILS (TYPICAL SECTIONS)
11	C-8	CIVIL DETAILS (TYPICAL SECTIONS)
12	C-9	CIVIL DETAILS (BOX CULVERT AREA)
13	C-10	CIVIL DETAILS (BIOFILTRATION BASIN 1 AREA)
14	C-11	CIVIL DETAILS (BIOFILTRATION BASIN 2 AREA)
15	C-12	CIVIL DETAILS (BIOFILTRATION BASIN 3 AREA)
16	U-1	UTILITY DISTRIBUTION (WATER, SEWER, GAS)
17	U-2	POINT OF CONNECTION DETAILS
18	EC-1	EROSION CONTROL PLAN
19	EC-2	EROSION CONTROL DETAILS
20	ME-1	SUMP PUMP PLAN AND DETAILS
21	E-1	STANDARD ELECTRICAL SYMBOLS AND ABBREVIATIONS
22	E-2	SITE ELECTRICAL PLAN
23	E-3	SINGLE LINE DIAGRAM
24	E-4	CONDUIT/CABLE SCHEDULE AND PANEL SCHEDULE
25	E-5	BUILDING PANEL SCHEDULES
26	E-6	ELECTRICAL DETAILS
27	E-7	LIGHT FIXTURE SCHEDULE AND DETAILS
28	LP-1	LANDSCAPE PLAN
29	LP-2	PLANT LEGEND AND DETAILS
30	LI-1	IRRIGATION PLAN
31	LI-2	IRRIGATION LEGENDS
32	LI-3	IRRIGATION DETAILS
33	LI-4	IRRIGATION DETAILS
34	LI-5	IRRIGATION CALCULATIONS

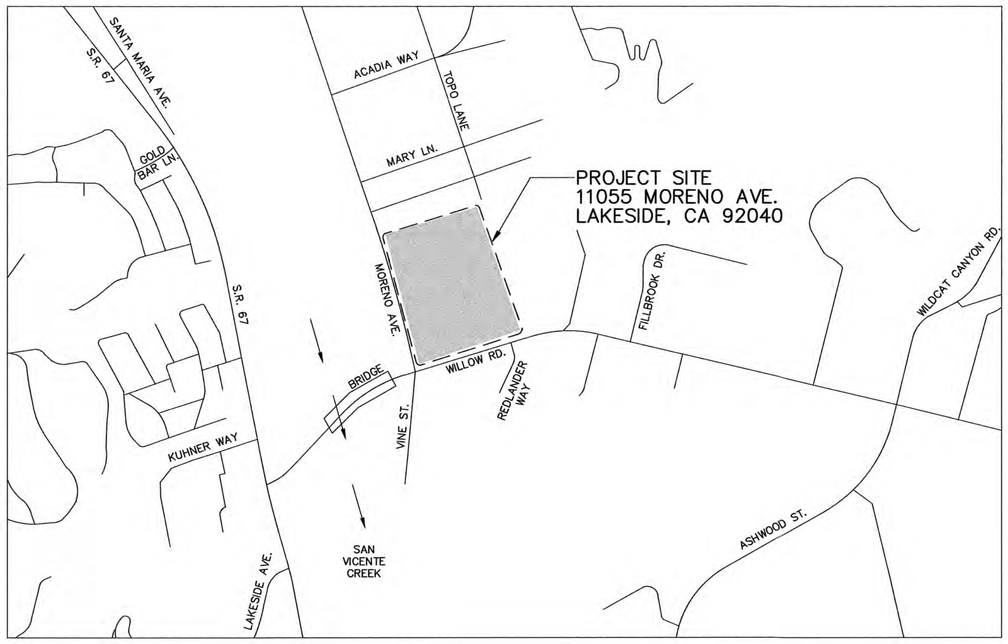

VICINITY MAP
SCALE: 1" = 500'

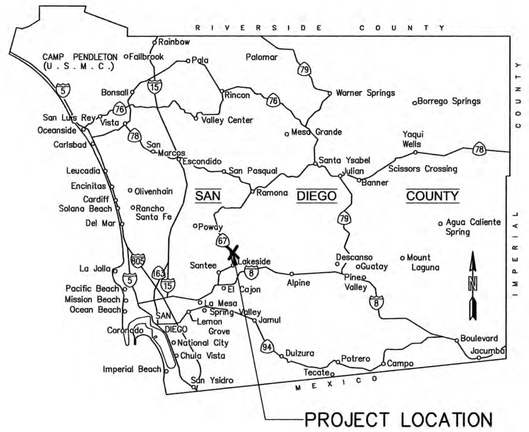

PROJECT LOCATION

CONTRACTOR NOTE:

THESE PLANS REPRESENT THE CIVIL (GRADING AND DRAINAGE), ELECTRICAL, WATER, SEWER, GAS, PLANTING AND IRRIGATION, AND SITE IMPROVEMENTS PORTION OF THE PROJECT.

SEE ASSOCIATED BUILDING PLANS THAT CONTAIN COMPLEMENTARY STRUCTURES AND FEATURES FOR THIS PROJECT.

UTILITY ALERT NOTE:

ATTENTION IS DIRECTED TO THE POSSIBLE EXISTENCE OF UNDERGROUND UTILITY FACILITIES NOT KNOWN OR IN A LOCATION DIFFERENT FROM THAT WHICH IS SHOWN ON THE PLANS OR IN THE SPECIAL PROVISIONS. THE CONTRACTOR SHALL TAKE STEPS TO ASCERTAIN THE EXACT LOCATION OF ALL UNDERGROUND FACILITIES PRIOR TO PERFORMING WORK THAT MAY DAMAGE SUCH FACILITIES OR INTERFERE WITH THEIR SERVICE. FORTY-EIGHT HOURS BEFORE EXCAVATING, THE CONTRACTOR SHALL VERIFY THE LOCATION OF UNDERGROUND FACILITIES BY CONTACTING UNDERGROUND SERVICE ALERT AT TELEPHONE 1-800-422-4133.

THE CONTRACTOR MUST ALSO INDIVIDUALLY CONTACT OPERATORS OF GRAVITY SEWER SYSTEMS AND CERTAIN OTHER UTILITIES, WHO ARE NOT MEMBERS OF UNDERGROUND SERVICE ALERT.

DEPARTMENT OF PARKS AND RECREATION
COUNTY OF SAN DIEGO
5500 OVERLAND DRIVE, SUITE 410 SAN DIEGO, CALIFORNIA 92123

COUNTY OF SAN DIEGO PARKS AND RECREATION

CHIEF DEVELOPMENT — DATE 2/13/20
CHIEF OPERATIONS — DATE 2/13/20
DIRECTOR — DATE 2/13/20

NO.	REVISIONS	APPR.	DATE

DESIGNED BY: JAB
DRAWN BY: JM
CHECKED BY: RO
PROJECT MANAGER: DB

G-1

LAKESIDE EQUESTRIAN FACILITY
COVER SHEET

SCALE: AS SHOWN
PROJ. NO.: 1020367
FILE NO.:
SHEET 1 OF 34

J:\Landscape Architecture\Projects\1020367\Design\Plans\Sheets\1020367-TITLE SHEET 100%.dwg Friday, Feb 07 2020 10:43am JAlastuey

PROJECT STANDARD SPECIFICATIONS

CAL TRANS 2018 SPECIFICATIONS SECTIONS 1–9
STANDARD SPECIFICATIONS FOR PUBLIC WORKS CONSTRUCTION (SSPWC) "GREENBOOK"

SAN DIEGO AREA REGIONAL STANDARD DRAWINGS (RSD) DEC. 2015

GENERAL CONSTRUCTION NOTES

1. THE CONTRACTOR SHALL VERIFY ALL DIMENSIONS AND CONDITIONS AT THE JOB SITE PRIOR TO STARTING CONSTRUCTION AND THE PARKS AND RECREATION PROJECT MANAGER SHALL BE NOTIFIED OF ANY DISCREPANCIES OR INCONSISTENCIES.

2. CONTRACTOR SHALL SUBMIT COMPLETE MANUFACTURER'S DESCRIPTIVE LITERATURE AND SPECIFICATIONS FOR ALL AMENITIES TO BE USED ON THE PROJECT FOR REVIEW AND APPROVAL BY THE PROJECT MANAGER PRIOR TO ORDERING EQUIPMENT. COORDINATE AND INCLUDE ALL THE REQUIREMENTS IN THE PROJECT SPECS.

3. CONTRACTOR TO SUBMIT SHOP DRAWINGS TO PROJECT MANAGER DESCRIBING THE FABRICATION AND INSTALLATION OF ALL AMENITIES AND EQUIPMENT INDICATED ON PLANS FOR REVIEW AND APPROVAL PRIOR TO INSTALLATION. INDICATE FOOTING DEPTHS FOR EMBEDDED ITEMS BASED ON ACTUAL SOIL CONDITIONS.

4. ALL DIMENSIONS SHALL BE STAKED BY CONTRACTOR VERIFIED IN FIELD BY PROJECT CONTRACTOR.

5. INSTALLATION OF ALL SITE AMENITIES, AND GRADING SHALL BE GOVERNED BY THE RECOMMENDATIONS SET FORTH IN THE GEOTECHNICAL REPORT PREPARED BY KLEINFELDER TITLED "GEOTECHNICAL INVESTIGATION LAKESIDE EQUESTRIAN PARK WILLOW ROAD AND MORENO AVE. LAKESIDE, CALIFORNIA" DATED 6/8/2017.

6. THE CONTRACTOR SHALL VERIFY THE EXISTENCE AND LOCATION OF ALL UTILITIES BEFORE COMMENCING WORK. NOTICE OF PROPOSED WORK SHALL BE GIVEN TO THE FOLLOWING AGENCIES:
PHONE NUMBER:

SAN DIEGO GAS AND ELECTRIC	(858) 547–3335
AT&T	(510) 645–2929
COX COMMUNICATIONS	(619) 226–5605
SAN DIEGO COUNTY WATER AUTHORITY	(858) 522–6908
HELIX WATER DISTRICT	(619) 667–6241
LAKESIDE WATER DISTRICT	(619) 443–3805
COUNTY OF SAN DIEGO SANITATION DISTRICT (LAKESIDE)	(858) 514–4990

WHEN EXCAVATING NEAR, AROUND OR TOUCHING ANY UTILITY OWNER'S LINE, REQUIRES 72 HOUR ADVANCE NOTIFICATION TO THE UTILITY OWNER. CONTRACTOR IS RESPONSIBLE FOR COORDINATION WITH UTILITY OWNER AND OBTAIN ANY SPECIFIC INSPECTIONS PRIOR TO THE ACCEPTANCE OF WORK.

7. THE PROJECT MANAGER OF PARKS AND RECREATION'S APPROVAL OF THESE PLANS DOES NOT CONSTITUTE COUNTY BUILDING OFFICIAL APPROVAL OF ANY FOUNDATION FOR STRUCTURES TO BE PLACED ON THE AREA COVERED BY THESE PLANS. NO WAIVER OF THE GRADING ORDINANCE REQUIREMENTS CONCERNING MINIMUM COVER OVER EXPANSIVE SOIL IS MADE OR IMPLIED (SECTIONS 87.403 & 87. 410). ANY SUCH WAIVER MUST BE OBTAINED FROM THE DIRECTOR OF PLANNING AND LAND USE.

8. ALL OPERATIONS CONDUCTED ON THE PREMISES, INCLUDING THE WARMING UP, REPAIR, ARRIVAL, DEPARTURE OR RUNNING OF TRUCKS, EARTHMOVING EQUIPMENT, CONSTRUCTION EQUIPMENT AND ANY OTHER ASSOCIATED GRADING EQUIPMENT SHALL BE LIMITED TO THE PERIOD BETWEEN 7:00AM AND 6.00PM EACH DAY, MONDAY THROUGH FRIDAY, AND NO EARTHMOVING OR GRADING OPERATIONS SHALL BE CONDUCTED ON THE PREMISES ON WEEKENDS OR HOLIDAYS UNLESS APPROVED IN WRITING BY THE DEPARTMENT OF PARKS AND RECREATION PROJECT MANAGER.

9. ALL SLOPES SHALL BE ROUNDED INTO EXISTING TERRAIN TO PRODUCE A CONTOURED TRANSITION FROM CUT OR FILL FACES TO NATURAL GROUND AND ABUTTING CUT OR FILL SURFACES.

10. NOTWITHSTANDING THE MINIMUM STANDARDS SET FORTH IN THE GRADING ORDINANCE AND NOTWITHSTANDING THE APPROVAL OF THESE GRADING PLANS, THE PERMITTEE IS RESPONSIBLE FOR THE PREVENTION OF DAMAGE TO ADJACENT PROPERTY. NO PERSON SHALL EXCAVATE ON LAND SO CLOSE TO THE PROPERTY LINE AS TO ENDANGER ANY ADJOINING PUBLIC STREET, SIDEWALK, ALLEY, FUNCTION OF ANY SEWAGE DISPOSAL SYSTEM, OR ANY OTHER PUBLIC OR PRIVATE PROPERTY WITHOUT SUPPORTING AND PROTECTING SUCH PROPERTY FROM SETTLING, CRACKING, EROSION, SILTING, SCOUR OR OTHER DAMAGE WHICH MIGHT RESULT FROM THE GRADING DESCRIBED ON THIS PLAN. THE COUNTY WILL HOLD THE PERMITTEE RESPONSIBLE FOR CORRECTION OF NON–DEDICATED IMPROVEMENTS WHICH DAMAGE ADJACENT PROPERTY.

11. SLOPE RATIOS:
CUT—1 ½: 1 FOR MINOR SLOPES (SLOPES < 15'), 2:1 FOR MAJOR SLOPES. FILL—2:1

THE MAJORITY OF THIS PROJECT IS LOCATED WITHIN A FLOODPLAIN AND REQUIRES CHEMICAL INSPECTION LEAK OF MATERIALS AND EQUIPMENT PRIOR TO ARRIVING AT THE JOBSITE, AND DURING CONSTRUCTION. STORAGE OF EQUIPMENT REQUIRES DRIP PANS. IN THE EVENT OF A SPILL, CLEANUP AREA AND DISPOSE IN ACCORDANCE WITH REGIONAL BOARD ORDER R9–2002–0342, WASTE DISCHARGE REQUIREMENTS FOR THE DISPOSAL AND/OR REUSE OF PETROLEUM FUEL CONTAMINATED SOILS IN THE SAN DIEGO REGION.

12. SPECIAL CONDITION: IF ANY ARCHEOLOGICAL RESOURCES ARE DISCOVERED ON THE SITE OF THIS GRADING DURING GRADING OPERATIONS, SUCH OPERATIONS WILL CEASE IMMEDIATELY, AND THE PERMITTEE WILL NOTIFY THE PROJECT MANAGER, DEPARTMENT OF PARKS AND RECREATION OF THE DISCOVERY. GRADING OPERATIONS WILL NOT RECOMMENCE UNTIL THE PERMITTEE HAS RECEIVED WRITTEN AUTHORITY FROM THE PROJECT MANAGER, DEPARTMENT OF PARKS AND RECREATION TO DO SO.

13. PERMANENT POST–CONSTRUCTION BMP DEVICES SHOWN ON PLAN SHALL NOT BE REMOVED OR MODIFIED WITHOUT THE APPROVAL FROM THE DEPARTMENT OF PARKS AND RECREATION.

SELECTED LEGEND

SYMBOL	DESCRIPTION	RSD
— – —	CENTERLINE	
-o—o—o-	LOG FENCE	
	4" DG SIDEWALK	
	NEW PCC DRIVEWAY	G–14B,G–15,G–16
259.0	PROPOSED ELEV.	
— – – —	EXIST. RIGHT–OF–WAY	
—W—	EXIST. WATER LINE	
—S—	EXIST. SEWER LINE	
—G—	EXIST. GAS LINE	
—E—	EXIST. ELECTRICAL LINE	
—C—	EXIST. COMMUNICATIONS CABLE	
	EXIST. STREET LIGHT	
	EXIST. FIRE HYDRANT	
GV	EXIST. WATER VALVE	
	EXIST. UTILITY POLE	
—SD—	EXIST. STORM DRAIN CULVERT	
(259.0)	EXISTING GROUND SPOT ELEV.	

PERMANENT WATER POLLUTION CONTROL BMP'S

1.	SITE DESIGN BMP'S	SEE SHEETS C–7, C–8
2.	SOURCE CONTROL BMP'S	SEE SHEETS C–7, C–8
3.	TREATMENT CONTROL BMP'S	SEE SHEETS C–7, C–8

SELECTED STANDARD ABBREVIATIONS

ACP	ASBESTOS–CEMENT PIPE
D.G.	DECOMPOSED GRANITE
EX.	EXISTING
FEMA	FEDERAL EMERGENCY MANAGEMENT AGENCY
FH	FIRE HYDRANT
IE	INVERT ELEVATION
PVC	POLYVINYL CHLORIDE
RCP	REINFORCED CONCRETE PIPE
RV	RECREATIONAL VEHICLE
S.D.G.E.	SAN DIEGO GAS AND ELECTRIC
SDCWA	SAN DIEGO COUNTY WATER AUTHORITY
SDRSD	SAN DIEGO REGIONAL STANDARD DRAWINGS
SL	STATION LINE
SQFT	SQUARE FEET
TYP.	TYPICAL
WS	WATER SPIGOT

HELIX WATER LINE GENERAL CONSTRUCTION NOTES

1. IT SHALL BE THE CONTRACTOR'S RESPONSIBILITY TO CONTACT HELIX WATER DISTRICT 48 HOURS PRIOR TO COMMENCING WORK AT (619) 596–3860 FOR STAND BY AND UNDERGROUND SERVICE ALERT FOR LOCATION OF EXISTING WATER FACILITIES AT 1–800– 422–4133.

2. CONTRACTOR TO PROTECT ALL EXISTING HELIX WATER DISTRICT FACILITIES AND SHALL BE RESPONSIBLE FOR THE COST DUE TO DAMAGE TO HELIX WATER DISTRICT FACILITIES AS A RESULT OF HIS/HER OPERATION, AND SHALL IMMEDIATELY CONTACT HELIX WATER DISTRICT SHOULD ANY DAMAGE TO ANY WATER FACILITIES OCCUR. CONTRACTOR TO PROVIDE CONTINUOUS WATER SERVICE TO ALL WATER ACCOUNTS SHOWN OR NOT SHOWN ON THESE PLANS DURING ALL PHASES OF CONSTRUCTION.

3. APPROVAL/REVIEW OF PLANS BY HELIX WATER DISTRICT DOES NOT CONSTITUTE RESPONSIBILITY FOR ACCURACY OF INFORMATION NOR LOCATIONS OF ANY EXISTING UTILITIES.

4. COUNTY OF SAN DIEGO, DEPARTMENT OF PARKS AND RECREATION SHALL BE RESPONSIBLE FOR THE COST OF RELOCATING ANY WATER FACILITIES THAT CONFLICT WITH ANY PROPOSED FACILITIES OR IMPROVEMENTS.

5. CONTRACTOR SHALL BE RESPONSIBLE FOR RELOCATION OR ADJUSTMENT OF ANY NEW OR EXISTING WATER SERVICE APPURTENANCES, MANHOLES, GATE VALVE COVERS, OR METER BOXES TO NEW FINISH GRADE.

6. CONTRACTOR AGREES THAT IF THEY, THEIR EMPLOYEES, AGENTS, OR ANY INDEPENDENT CONTRACTORS OR SUBCONTRACTORS SHOULD USE WATER OTHER THAN THROUGH AN AUTHORIZED WATER METER, THE CONTRACTOR SHALL PAY A CHARGE, DETERMINED BY HELIX WATER DISTRICT, PER OCCURRENCE FOR SAID USE. SAID PAYMENT MAY BE DEDUCTED FROM ANY DEPOSIT THE CONTRACTOR HAS WITH HELIX WATER DISTRICT.

7. NO PERSON, OTHER THAN AN EMPLOYEE OR AGENT OF THE HELIX WATER DISTRICT, SHALL HAVE A RIGHT TO OPERATE ANY PART OF A HELIX WATER DISTRICT WATER DISTRIBUTION SYSTEM AND FIRE HYDRANTS. ANY PERSON WHO TAMPERS OR INTERFERES WITH ANY PART OR COMPONENT OF SAID SYSTEM, OR CAUSES OR PERMITS ANY ACT OF TAMPERING OR INTERFERING WITH THE SYSTEM, SHALL BE LIABLE FOR ANY INJURY OR DAMAGE CAUSED THEREBY OR RESULTING THERE FROM. A CHARGE, DETERMINED BY HELIX WATER DISTRICT, PER OCCURRENCE WILL BE IMPOSED ON ANY PERSON OR COMPANY WHO OPERATES ANY PART OF THE HELIX WATER DISTRICT WATER SYSTEM WITHOUT PROPER AUTHORIZATION.

8. THE EXISTING 36" TRANSMISSION MAIN SHALL BE SUPPORTED AND PROTECTED DURING ALL PHASES OF CONSTRUCTION. ALL AREAS OF DISTURBED SOIL AROUND THE EXISTING TRANSMISSION MAIN SHALL BE BACKFILLED WITH DECOMPOSED GRANITE AROUND THE TRANSMISSION MAIN COMPACTED TO 90% AND PER WATER AGENCIES' STANDARD.

9. PRIOR TO START OF CONSTRUCTION, CONTRACTOR SHALL VERIFY AND STAKE THE LOCATION OF THE 36" TRANSMISSION MAIN CENTERLINE.

10. NO HEAVY CONSTRUCTION EQUIPMENT SHALL BE ALLOWED OVER THE HELIX WATER DISTRICT'S PIPELINE. FOR WORK OVER EXISTING WATER FACILITIES, HEAVY EQUIPMENT (ABOVE H20 LOADING) SHALL NOT BE USED WHEN COVER OVER THE WATER MAIN IS LESS THAN 36" THROUGH ALL PHASES OF CONSTRUCTION, INCLUDING THE REMOVAL, OVER EXCAVATION, AND/OR INSTALLATION OF PAVEMENT SECTIONS AND CULVERTS, WITHOUT THE WRITTEN APPROVAL OF HELIX WATER DISTRICT.

11. CONTRACTOR SHALL MAINTAIN A MINIMUM OF 36" COVER FROM TOP OF 36" TRANSMISSION MAIN TO FINISH GRADE THROUGH ALL PHASES OF CONSTRUCTION.

12. UNLESS SHOWN ON THESE PLANS, PRIVATE WATER LINES AND OTHER PRIVATE UTILITIES (PROPOSED OR EXISTING) SHALL NOT RUN PARALLEL WITHIN A WATER LINE EASEMENT. PERPENDICULAR CROSSINGS ONLY AND SHALL BE PLACED IN A CASING AND SHALL BE SHOWN ON RECORD DRAWINGS. THE CASING SHALL BE CENTERED ON THE PUBLIC WATER LINE, 5' ON EITHER SIDE, AND ENCASED IN RED COLORED 2–SLACK SLURRY THE FULL LENGTH OF THE CASING.

13. ANY FINISHED SURFACE IMPROVEMENT, OTHER THAN ASPHALT ABOVE THE PIPELINE OR UNDERGROUND FACILITIES, WILL REQUIRE AN ENCROACHMENT REMOVAL AGREEMENT. PERMEABLE FINISHED SERVICE IMPROVEMENTS OR BIO RETENTION SWALES OR BASINS ARE PROHIBITED WITHIN HELIX WATER DISTRICT WATER MAIN EASEMENT.

14. CONTRACTOR TO INSTALL TEMPORARY CHAIN LINK FENCING ON BOTH SIDES OF THE HELIX WATER DISTRICT TRANSMISSION EASEMENT INTERSECTING THE PROJECT SITE PRIOR TO COMMENCING CONSTRUCTION. ALL FENCING SHALL MAINTAIN A MINIMUM 3' HEIGHT THROUGHOUT ALL PHASES OF CONSTRUCTION, AND MAINTENANCE WILL BE THE RESPONSIBILITY OF THE CONTRACTOR UNTIL THE PROJECT HAS BEEN ACCEPTED BY THE COUNTY OF SAN DIEGO.

SURVEY CONTROL

REMARKS

THESE PLANS ARE BASED ON US CUSTOMARY (ENGLISH) UNITS. ALL DISTANCES ARE EXPRESSED IN FEET (FT) AND INCHES (IN) UNLESS OTHERWISE NOTED. SURVEY PREPARED BY THE COUNTY OF SAN DIEGO, RECEIVED BY KLEINFELDER 3/16/2017.

PURPOSE OF SURVEY

TO PROVIDE AERIAL CONTROL FOR THE LAKESIDE EQUESTRIAN FACILITY PROPERTY SITE FOR APS. AERIAL IS FLOWN AT 2' CONTOUR ACCURACY FOR FEMA FLOODWAY ANALYSIS.

METHOD OF SURVEY

AERIAL CONTROL WAS ESTABLISHED USING RTN ACCESSING DATA FROM CORS P473. OBSERVATIONS WERE 5 MINUTE IN DURATION, DOUBLE OCCUPIED, AND AVERAGED.

AERIAL CONTROL POINTS (ALL FLUSH WITH GROUND SURFACE)

PT#	NORTHING	EASTING	ELEVATION	DESCRIPTION
1	1898913.352	6357483.209	412.613	LSET PM 1
2	1899163.876	6355653.168	411.941	LSET PM 2
3	1898447.378	6354624.593	430.274	LSET PM 3
4	1900421.182	6355288.619	416.145	LSET PM 4
5	1901182.410	6353508.871	426.845	LSET PM 5
6	1901883.891	6356681.007	490.134	LSET PM 6

DATUM/CONTROL

CONTROL IS BASED ON THE CALIFORNIA COORDINATE SYSTEM, ZONE 6, NAD83 (NSRS2007) EPOCH 2011.00. THE DATUM WAS ACCESSED USING CORS 'P473'. ELEVATIONS ARE RELATIVE TO THE NORTH AMERICAN VERTICAL DATUM OF 1988 (NAVD88) WHICH WAS ACCESSED USING CORS 'P473' IN CONJUNCTION WITH THE NGS GEODID MODEL 'GEOID09'.

STORM WATER MANAGEMENT NOTES

1. DURING THE RAINY SEASON THE AMOUNT OF EXPOSED SOIL ALLOWED AT ONE TIME SHALL NOT EXCEED THAT WHICH CAN BE ADEQUATELY PROTECTED BY THE CONTRACTOR IN THE EVENT OF A RAINSTORM. 125% SHALL BE RETAINED ON THE JOB SITE IN A MANNER THAT ALLOWS FULL DEPLOYMENT AND COMPLETE INSTALLATION IN 48 HOURS OR LESS OF A FORECAST RAIN.

2. THE CONTRACTOR IS OBLIGATED TO INSURE COMPLIANCE WITH ALL APPLICABLE STORM WATER REGULATIONS AT ALL TIMES. THE B.M.P.'S (BEST MANAGEMENT PRACTICES) THAT HAVE BEEN INCORPORATED INTO THIS PLAN SHALL BE IMPLEMENTED AND MAINTAINED TO EFFECTIVELY PREVENT THE POTENTIALLY NEGATIVE IMPACTS OF THIS PROJECT'S CONSTRUCTION ACTIVITIES ON STORM WATER QUALITY. THE MAINTENANCE OF THE B.M.P.'S IS THE PERMITTEE'S RESPONSIBILITY, AND FAILURE TO PROPERLY INSTALL OR MAINTAIN THE B.M.P.'S MAY RESULT IN ENFORCEMENT ACTION BY THE COUNTY OF SAN DIEGO OR OTHERS. IF INSTALLED B.M.P.'S FAIL, THEY MUST BE REPAIRED OR REPLACED WITH AN ACCEPTABLE ALTERNATE WITHIN 24 HOURS, OR AS SOON AS SAFE TO DO SO.

3. ON PROJECTS OF GREATER THAN ONE ACRES ADD THE FOLLOWING NOTE: A NOTICE OF INTENT (NOI) HAS BEEN, OR WILL BE FILED WITH THE STATE WATER RESOURCES CONTROL BOARD (SWRCB) AND THAT A STORM WATER POLLUTION PREVENTION PLAN (SWPPP) HAS BEEN OR WILL BE PREPARED IN ACCORDANCE WITH THE REQUIREMENTS OF CALIFORNIA GENERAL PERMIT FOR STORM WATER DISCHARGES ASSOCIATED WITH CONSTRUCTION ACTIVITY (PERMIT NO. CAS000002) FOR ALL OPERATIONS ASSOCIATED WITH THESE PLANS. THE NOI NUMBER ASSIGNED BY SWRCB FOR THIS PROJECT IS [WDID#] [ALTERNATIVE: NOT YET ASSIGNED, BUT WILL BE PROVIDED BEFORE A PERMIT IS ISSUED], THE PERMITTEE SHALL KEEP A COPY OF THE SWPPP ON SITE AND AVAILABLE FOR REVIEW BY COUNTY.

4. THE CONTRACTOR IS REQUIRED TO PREPARE AND SUBMIT A PROJECT SWPPP TO THE DEPARTMENT OF PARKS AND RECREATION PROJECT MANAGER THREE WEEKS PRIOR TO THE START OF CONSTRUCTION. APPROVAL AND BMP'S ARE REQUIRED PRIOR TO BEGINNING OF ANY EARTHWORK.

5. IMPLEMENT ALL BMPS OUTLINED IN PROJECT SWPPP. ALL BMPS MUST BE INSPECTED AND MAINTAINED REGULARLY. INSPECTIONS ARE REQUIRED EITHER (1) AT LEAST ONCE EVERY 7 DAYS OR (2) AT LEAST ONCE EVERY 14 DAYS AND WITHIN 24 HOURS OF THE END OF A RAIN EVENT OF 1/2–INCH OR MORE. THE SWPPP MUST ALSO BE UPDATED AS SITE CONDITIONS AND BMPS CHANGE. REMEMBER TO KEEP RECORDS OF YOUR MAINTENANCE ACTIVITIES AND ANY SWPPP MODIFICATIONS FOR REVIEW DURING INSPECTION. COPIES OF THE SWPPP BMP REPORTS SHALL BE DELIVERED TO THE COUNTY PROJECT MANAGER WITHIN 72–HOURS OF EACH INSPECTION.

6. CONTRACTOR IS TO POST THE COMPLETE NOI AND POST AT THE CONSTRUCTION SITE IN A PLACE ACCESSIBLE TO THE PUBLIC.

7. REFERENCE IS MADE TO THE CONTRACT GENERAL CONDITIONS AND STANDARD SPECIFICATIONS

G-2

REGISTERED PROFESSIONAL ENGINEER
DON BLOODWORTH
No. C 60954
Exp. 12/31/2020
CIVIL
STATE OF CALIFORNIA

KLEINFELDER
Bright People. Right Solutions.

REGISTERED ENGINEER DATE

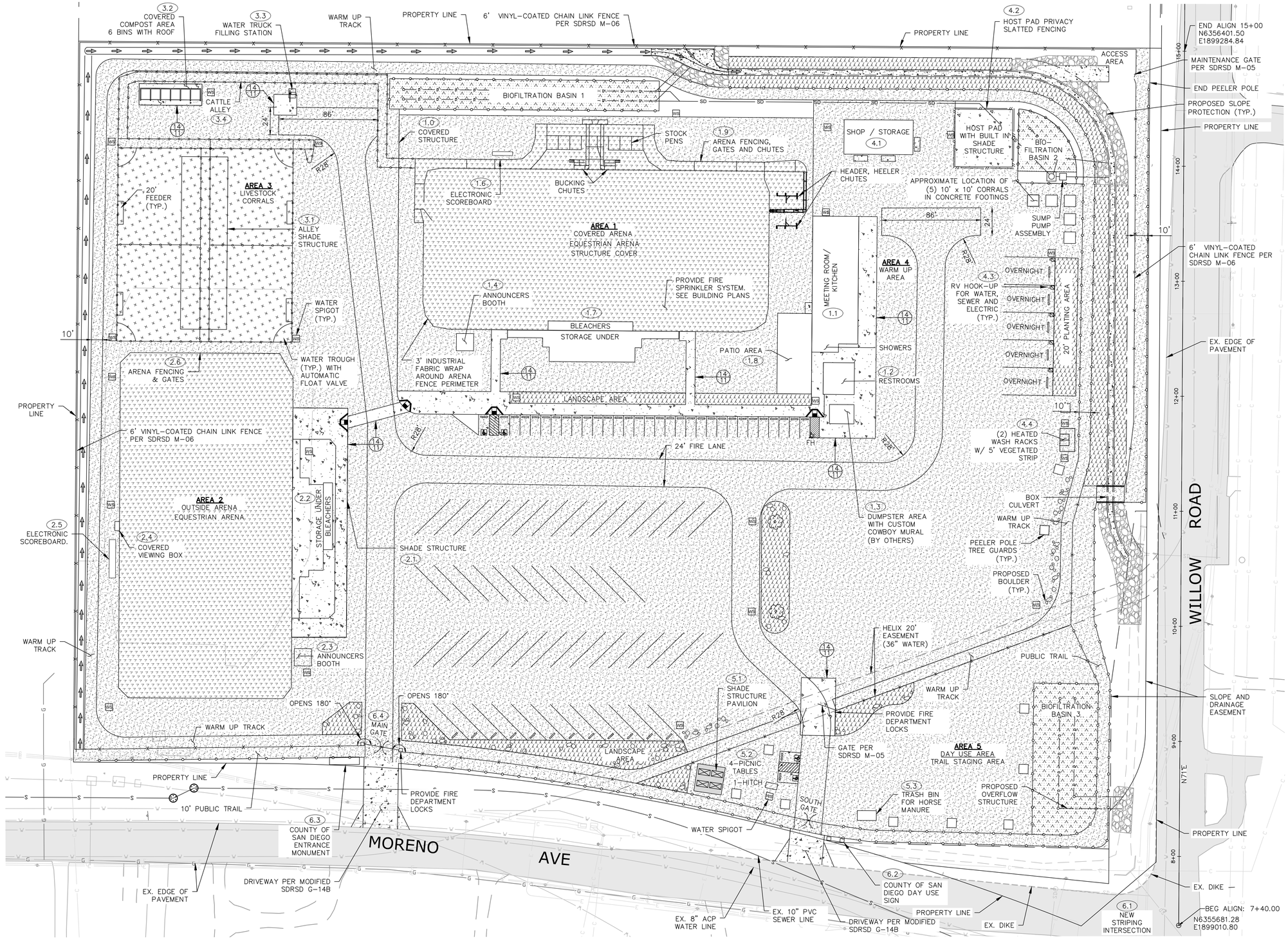

LEGEND:

- FH — FIRE HYDRANT
- SOLAR LIGHT (MOTION CENSORED)
- WS — WATER SPIGOT
- DOUBLE SWING GATE (MANUAL)
- RV — RV HOOK-UPS
- LANDSCAPE BY OTHERS (SEE PLANTING PLANS)
- BIOFILTRATION PLANTING
- SLOPE PROTECTION/ OUTLET PROTECTION
- EXISTING ASPHALT PAVEMENT
- CONCRETE
- NATIVE SOIL
- STABILIZED DECOMPOSED GRANITE (SEE DETAIL 7 OF SHEET 11)
- LIVESTOCK FOOTING MATERIAL

NOTES:

SEE SITE ELECTRICAL PLAN FOR LIGHTING LOCATIONS AND DETAILS.
LIST OF STRUCTURES AND FEATURES TO BE PROVIDED BY OTHERS.

AREA 1 COVERED ARENA

NO.	STRUCTURES / FEATURES	PLAN SHEET/S
1.0	COVERED STRUCTURE	SEE BUILDING PLANS
1.1	MEETING ROOM / KITCHEN	SEE BUILDING PLANS
1.2	RESTROOM	SEE BUILDING PLANS
1.3	DUMPSTER (COWBOY MURAL)	SEE BUILDING PLANS
1.4	ANNOUNCERS BOOTH	SEE BUILDING PLANS
1.5	NOT USED	-
1.6	ELECTRONIC SCOREBOARD	SEE BUILDING PLANS
1.7	BLEACHERS	SEE BUILDING PLANS
1.8	PATIO AREA	SEE BUILDING PLANS
1.9	ARENA FENCING, GATES, CHUTES	SEE BUILDING PLANS

AREA 2 OUTSIDE ARENA

NO.	STRUCTURES / FEATURES	PLAN SHEET/S
2.1	BLEACHERS SHADE STRUCTURE	SEE BUILDING PLANS
2.2	BLEACHERS	SEE BUILDING PLANS
2.3	ANNOUNCERS BOOTH	SEE BUILDING PLANS
2.4	COVERED VIEWING BOX	SEE BUILDING PLANS
2.5	ELECTRONIC SCOREBOARD	SEE BUILDING PLANS
2.6	AREA FENCING & GATES	SEE BUILDING PLANS

AREA 3 LIVESTOCK CORRALS

NO.	STRUCTURES / FEATURES	PLAN SHEET/S
3.1	ALLEY SHADE STRUCTURE	SEE BUILDING PLANS
3.2	COVERED COMPOST AREA	SEE BUILDING PLANS
3.3	WATER TRUCK FILLING STATION	SEE BUILDING PLANS
3.4	CATTLE ALLEY	SEE BUILDING PLANS

AREA 4 WARM UP AREA

NO.	STRUCTURES / FEATURES	PLAN SHEET/S
4.1	SHOP/STORAGE 30X60	SEE BUILDING PLANS
4.2	HOST PAD W/ SHADE STRUCTURE	SEE BUILDING PLANS
4.3	RV HOOKUP CONNECTION (5 EA.)	SEE ELECTRICAL PLANS
4.4	HEATED WASH RACKS (2 EA.)	SEE BUILDING PLANS

AREA 5 DAY USE / TRAIL STAGING AREA

NO.	STRUCTURES / FEATURES	PLAN SHEET/S
5.1	SHADE STRUCTURE PAVILION 24X24	SEE BUILDING PLANS
5.2	PICNIC TABLES (4 EA.)	SEE BUILDING PLANS
5.3	TRASH BIN FOR HORSE MANURE	SEE BUILDING PLANS

AREA 6

NO.	STRUCTURES / FEATURES	PLAN SHEET/S
6.1	NEW INTERSECTION STRIPING	SEE INTERSECTION PLAN
6.2	DAY USE SIGNAGE	SEE BUILDING PLANS
6.3	COUNTY PARK MONUMENT SIGNAGE	SEE BUILDING PLANS
6.4	GRAND ENTRANCE ARCH SIGN	SEE BUILDING PLANS

0 40 80
SCALE: 1" = 40' SCALE IN FEET

G-3

REGISTERED PROFESSIONAL ENGINEER — DON BLOODWORTH — No. C 69654 — Exp. 12/31/2020 — CIVIL — STATE OF CALIFORNIA

KLEINFELDER
Bright People. Right Solutions.

REGISTERED ENGINEER ____ DATE ____

DEPARTMENT OF PARKS AND RECREATION
COUNTY OF SAN DIEGO
5500 OVERLAND DRIVE, SUITE 410 SAN DIEGO, CALIFORNIA 92123

COUNTY OF SAN DIEGO PARKS AND RECREATION

NO.	REVISIONS	APPR.	DATE

DESIGNED BY: JAB
DRAWN BY: JM
CHECKED BY: RO
PROJECT MANAGER: DB

LAKESIDE EQUESTRIAN FACILITY

KEY MAP

SCALE: AS SHOWN
PROJ. NO.: 1020367
FILE NO.:
SHEET 3 OF 34

C:\pw\working\kleinfelderpw01\jmanning@kleinfelder.com\D1926.61\1020367-KEY-MAP.dwg Friday, Feb. 07 2020 10:18am JManning

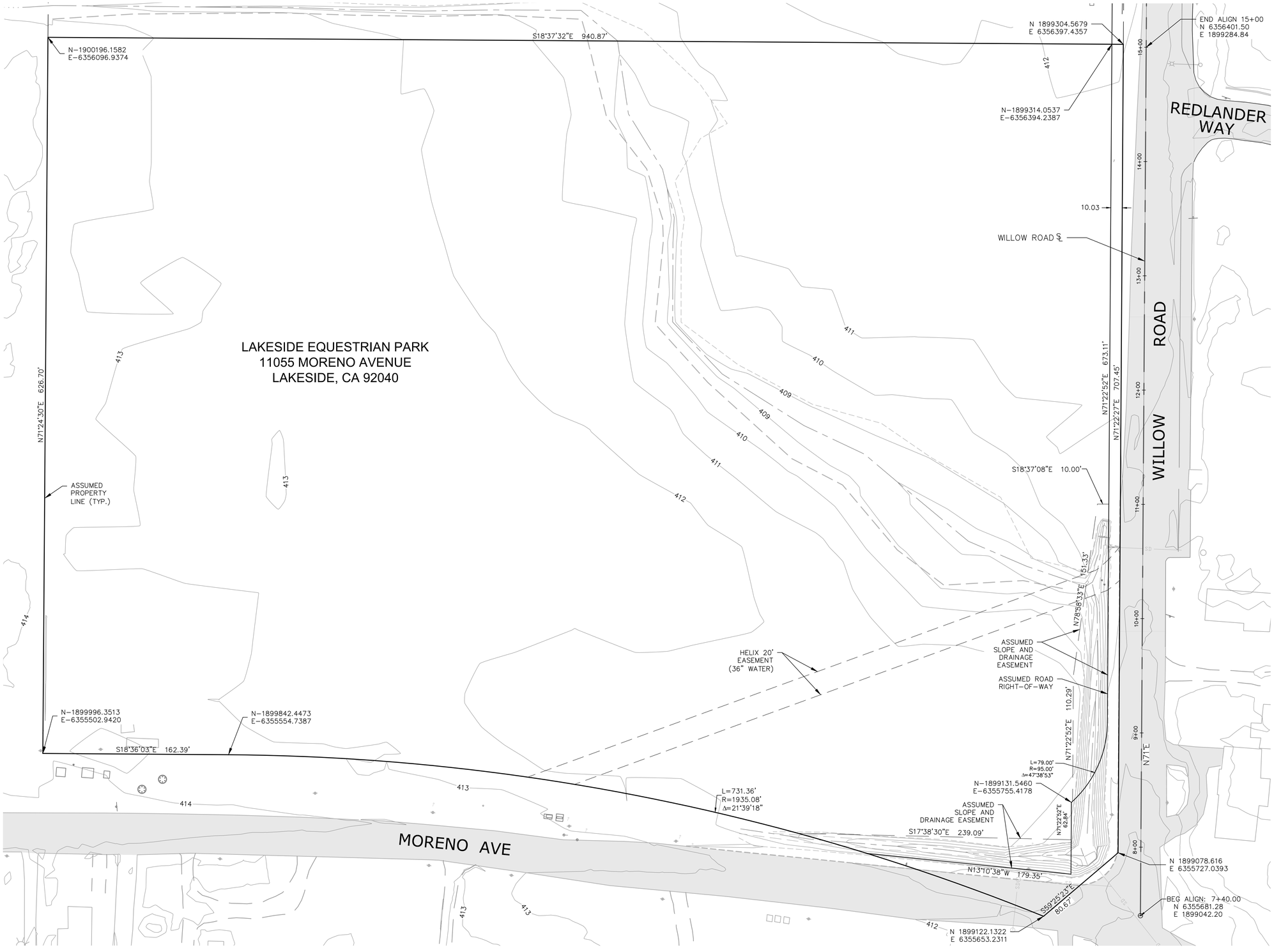

NOTE:
TOPOGRAPHY AND RIGHT-OF-WAY PROVIDED BY COUNTY OF SAN DIEGO

0 40 80
SCALE: 1" = 40' SCALE IN FEET

C-1

REGISTERED PROFESSIONAL ENGINEER
DON BLOODWORTH
No. C 60954
Exp. 12/31/2020
CIVIL
STATE OF CALIFORNIA

KLEINFELDER
Bright People. Right Solutions.

REGISTERED ENGINEER DATE

DEPARTMENT OF PARKS AND RECREATION
COUNTY OF SAN DIEGO
5500 OVERLAND DRIVE, SUITE 410 SAN DIEGO, CALIFORNIA 92123

COUNTY OF SAN DIEGO PARKS AND RECREATION

NO.	REVISIONS	APPR.	DATE

DESIGNED BY: JAB
DRAWN BY: JM
CHECKED BY: RO
PROJECT MANAGER: DB

LAKESIDE EQUESTRIAN FACILITY
EXISTING PROPERTY LINES & EASEMENTS

SCALE: AS SHOWN
PROJ. NO. 1020367
FILE NO.
SHEET 4 OF 34

C:\pwworking\kleinfelderpw01\jmaninang@kleinfelder.com\d0192616\1020367-EX-PROPERTY-LINES-EASEMENT_100%.dwg Friday, Feb. 07 2020 10:19am JManinang

LAKESIDE EQUESTRIAN PARK
11055 MORENO AVENUE
LAKESIDE, CA 92040

PROPERTY LINE (TYP.)

42.5" ABANDONED PIPELINE

EX. WATER VAULT, PROTECT IN PLACE

APPROX. LOCATION OF POSSIBLE 42.5" ABANDONED PIPELINE
N 1899940.58
E 6355521.71

EX. OVERHEAD COMMUNICATIONS CABLE (AT&T), PROTECT IN PLACE

EX. 48" (CITY OF S.D. SAN VICENTE LINE 2), PROTECT IN PLACE

S18°36'03"E 162.39'

APPROX. HELIX WATER LINE LOCATION
N32° 52' 37.51"
W116° 55' 15.95"
APPROX. ELV. 401'
N 6627800.5952
E 273112.4551

EX. 10" PVC SEWER LINE, PROTECT IN PLACE

L=731.36'
R=1935.08'
Δ=21°39'18"

EX. DIKE

EX. FIRE HYDRANT PROTECT IN PLACE

S17°38'30"E 239.09'

N13°10'38"W 179.35'

S59°25'23"E 80.67'

EX. 10'x4' BOX CULVERT PROTECT IN PLACE

BEG ALIGN: 7+40.00
N 6355681.28
E 1899042.20

EX. HEADWALL AND STORM DRAIN

EX. UTILITY POLE, PROTECT IN PLACE (TYP)

EX. GUY WIRE (TYP), PROTECT IN PLACE

SLOPE AND DRAINAGE EASEMENT

L=79.00'
R=95.00'
Δ=47°38'53"

N71°22'52"E 62.84'

N71°E

EX. DRAINAGE CHANNEL

N71°22'52"E 110.29'

EX. PERIMETER FENCING (TYP.), TO BE REMOVED

ROAD RIGHT-OF-WAY

SLOPE AND DRAINAGE EASEMENT

HELIX 20' EASEMENT (36" WATER)

EX. 36" CCP WATER LINE (HELIX WATER DISTRICT) PROTECT IN PLACE

APPROX. LOCATION OF EX. 36" CCP WATER LINE (HELIX WATER DISTRICT)
N32° 52' 33.70"
W116° 55' 12.24"
APPROX. ELV. 399'
N 6627970.9309
E 273580.0987

N78°58'33"E 151.83'

EX. 18" CMP ABANDONED CULVERT

CUT AND CAP EX. 18" CMP AS NEEDED TO CONSTRUCT CHANNEL

EX. WATER VALVE, PROTECT IN PLACE

EX. HEADWALL AND 18" RCP, PROTECT IN PLACE

S18°37'08"E 10.00'

WILLOW

MORENO AVE

EX. SEWER MANHOLES, PROTECT IN PLACE

EX. 4" PX GAS LINE (S.D.G.E)

EDGE OF PAVEMENT

EX. 10" PVC SEWER MAIN PER PLAN NS2064 (LAKESIDE SANITATION DISTRICT)

EX. ELECTRICAL (TYP.)(S.D.G.E) PROTECT IN PLACE

EX. ELECTRICAL CABINET, PROTECT IN PLACE

EX. STORM DRAIN MANHOLE PROTECT IN PLACE

EX. 16" ACP WATER LINE (LAKESIDE IRRIGATION DISTRICT) PROTECT IN PLACE

EX. 42.5" WATER LINE (CITY OF S.D. SAN VICENTE LINE 1)

EX. 8" ACP WATER LINE (LAKESIDE IRRIGATION DISTRICT)

EX. STORM DRAIN INLET PROTECT IN PLACE

EX. 18" CMP STORM DRAIN PROTECT IN PLACE

EXISTING BRIDGE

411 412 413

0 30 60
SCALE: 1" = 30' SCALE IN FEET

NOTE:
UTILITY LOCATIONS INTERPRETED
FROM MULTIPLE AS-BUILTS DOCUMENTS.

C-2

REGISTERED PROFESSIONAL ENGINEER
DON BLOODWORTH
C 69954
12/31/2020
CIVIL
STATE OF CALIFORNIA

KLEINFELDER
Bright People. Right Solutions.

REGISTERED ENGINEER DATE

DEPARTMENT OF PARKS AND RECREATION
COUNTY OF SAN DIEGO
5500 OVERLAND DRIVE, SUITE 410 SAN DIEGO, CALIFORNIA 92123

COUNTY OF SAN DIEGO PARKS AND RECREATION

NO.	REVISIONS	APPR.	DATE

DESIGNED BY: JAB
DRAWN BY: JM
CHECKED BY: RO
PROJECT MANAGER: DB

LAKESIDE EQUESTRIAN FACILITY
EXISTING UTILITIES (MORENO AVENUE)

SCALE: AS SHOWN
PROJ. NO.: 1020367
FILE NO.:
SHEET 5 OF 34

C:\pw\working\kleinfelderpw01\jmanning@kleinfelder.com\d1020367.c2-EXISTING UTILITIES_100%.dwg Friday, Feb. 07 2020 10:19am JManning

N-1900196.1582
E-6356096.9374

S18°37'32"E 940.87'

EX. PERIMETER FENCING (TYP.), TO BE REMOVED

EX. LIVESTOCK CORRAL, TO BE REMOVED BY OTHERS (N.I.C.)

EX. ROPING ARENA, TO BE REMOVED INCLUDING FENCING BY OTHERS (N.I.C.)

EX FENCE (TYP.) TO BE REMOVED

EX BUILDING, TO BE REMOVED

EX. LIGHT POLE TO BE REMOVED

EX TREE (TYP.) TO BE REMOVED

N-1899996.3513
E-6355502.9420

EX. OVERHEAD COMMUNICATIONS CABLE (AT&T), PROTECT IN PLACE

S18°36'03"E 162.39'

APPROX. LOCATION OF POSSIBLE 42.5" ABANDONED PIPELINE
N 1899940.58
E 6355521.71

N71°24'30"E 626.70'

APPROXIMATE LOCATION OF EX. UNDERGROUND TANK, ENCOUNTERED APPROXIMATELY 2' BELOW GRADE, TO BE REMOVED

APPROX. LOCATION OF POSSIBLE 42.5" ABANDONED PIPELINE
N 1899374.41
E 6356373.90

POSSIBLE 42.5" ABANDONED PIPELINE PER DSD 334-W AND 736-W DATED 1927 (TO BE FIELD VERIFIED), TO BE CAPPED AT PROPERTY LINE AND REMOVED

N 1899304.5679
E 6356397.4357

LAKESIDE EQUESTRIAN PARK
11055 MORENO AVENUE
LAKESIDE, CA 92040

MORENO AVE

L=731.36'
R=1935.08'
Δ=21°39'18"

S17°38'30"E 239.09'

N13°10'38"W 179.35'

S69°25'23"E 80.67'

N 1899122.1322
E 6355653.2311

WILLOW ROAD ℄

EX. PERIMETER FENCING (TYP.), TO BE REMOVED

10.03

N71°22'52"E 673.11'

N71°22'27"E 707.45'

S18°37'08"E 10.00'

WILLOW ROAD

N78°58'33"E 151.33'

EX. PERIMETER FENCING (TYP.), TO BE REMOVED

N71°22'52"E 110.29'

L=79.00'
R=95.00'
Δ=47°38'53"

N71°22'52"E 62.84'

N71°E

N 1899078.616
E 6355727.0393

BEG ALIGN 7+40.00
N 6355681.28
E 1899042.20

15+00
14+00
13+00
12+00
11+00
10+00
9+00
8+00

NOTE:

CLEAR AND GRUB INSIDE PROPERTY LINE AND TO PAVEMENT EDGE ALONG MORENO AVENUE AND WILLOW ROAD.

0 40 80
SCALE: 1" = 40' SCALE IN FEET

C-3

PROFESSIONAL ENGINEER — DON BLOODWORTH — No. C 69554 — 12/31/2020 — CIVIL — STATE OF CALIFORNIA

KLEINFELDER
Bright People. Right Solutions.

REGISTERED ENGINEER DATE

DEPARTMENT OF PARKS AND RECREATION

COUNTY OF SAN DIEGO

5500 OVERLAND DRIVE, SUITE 410 SAN DIEGO, CALIFORNIA 92123

COUNTY OF SAN DIEGO PARKS AND RECREATION

NO.	REVISIONS	APPR.	DATE

DESIGNED BY: JAB
DRAWN BY: JM
CHECKED BY: RO
PROJECT MANAGER: DB

LAKESIDE EQUESTRIAN FACILITY

DEMOLITION PLAN

SCALE: AS SHOWN
PROJ. NO.: 1020367
FILE NO.:
SHEET 6 OF 34

C:\pwworking\kleinfelderpw01\jmanning@kleinfelder.com\d01926161\1020367-C003-EXISTING CONDITIONS_100%.dwg Friday, Feb. 07 2020 10:19am JManning

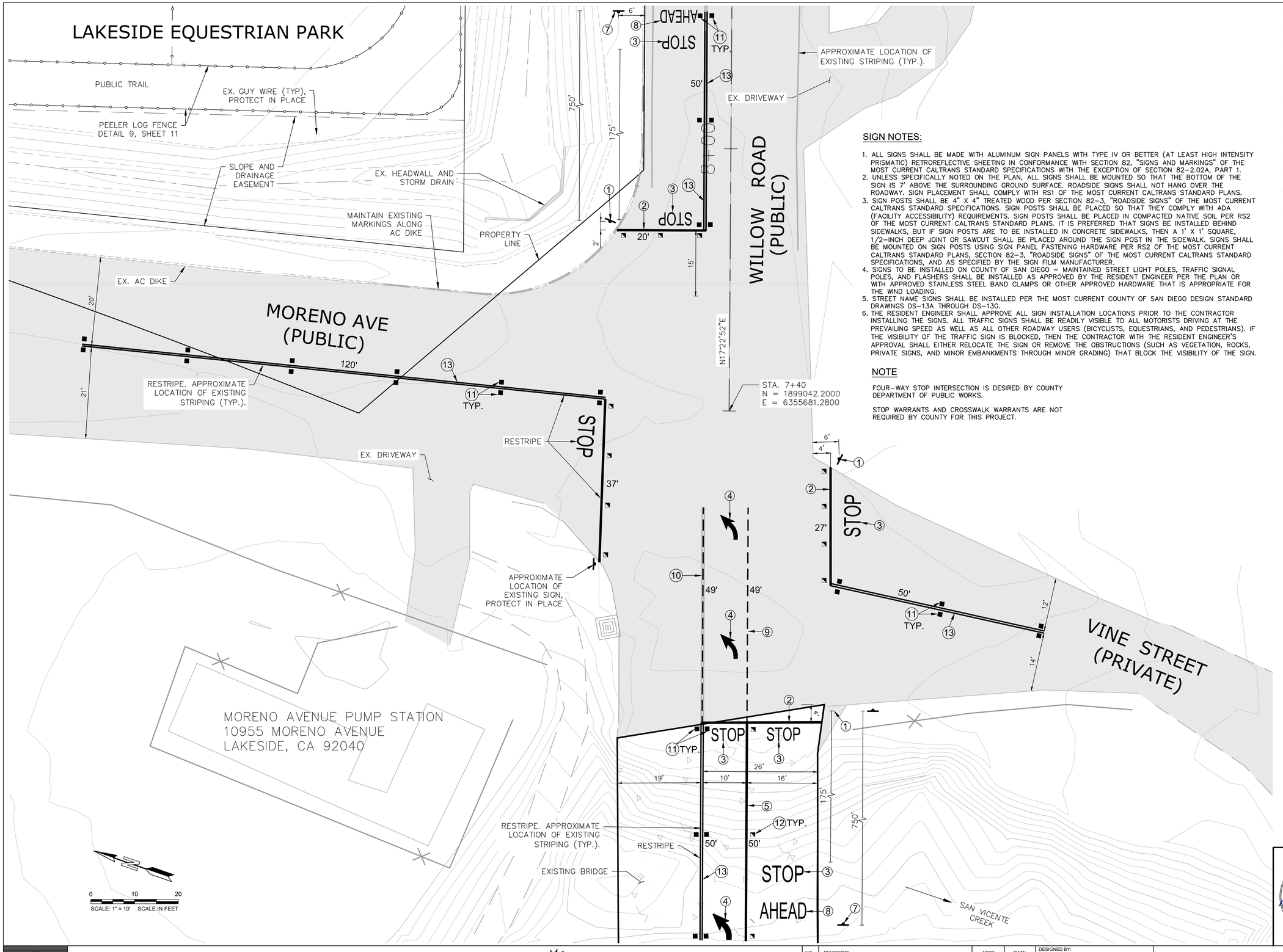

CONSTRUCTION NOTES

1. R1 'STOP' AND R1-3 'ALL WAY' SIGNS
2. 12" WHITE LIMIT LINE PER CALTRANS STD. PLAN A24E
3. "STOP" MARKING PER CALTRANS STD. PLAN A24D
4. TYPE IV(L) ARROW PER CALTRANS STD. PLAN A24A
5. 8" WHITE, CALTRANS STD. PLAN A20D, DETAIL 38
6. MAINTAIN EXISTING ASPHALT PAVEMENT
7. W3-1A 'STOP AHEAD' SIGN
8. "AHEAD" MARKING PER CALTRANS STD. PLAN A24D
9. DASHED 6" WHITE LINE PER CALTRANS STD. PLAN A20D, DETAIL 40
10. DASHED 6" YELLOW LINE PER CALTRANS STD. PLAN A20D, DETAIL 41
11. TYPE D TWO-WAY YELLOW REFLECTIVE MARKERS PER CALTRANS STD PLAN A20A
12. TYPE G ONE-WAY WHITE REFLECTIVE MARKERS PER CALTRANS STD PLAN A20D
13. DOUBLE 6" YELLOW LINE MARKING PER CALTRANS STD. PLAN A20A, DETAIL 22

SIGN NOTES:

1. ALL SIGNS SHALL BE MADE WITH ALUMINUM SIGN PANELS WITH TYPE IV OR BETTER (AT LEAST HIGH INTENSITY PRISMATIC) RETROREFLECTIVE SHEETING IN CONFORMANCE WITH SECTION 82, "SIGNS AND MARKINGS" OF THE MOST CURRENT CALTRANS STANDARD SPECIFICATIONS WITH THE EXCEPTION OF SECTION 82-2.02A, PART 1.
2. UNLESS SPECIFICALLY NOTED ON THE PLAN, ALL SIGNS SHALL BE MOUNTED SO THAT THE BOTTOM OF THE SIGN IS 7' ABOVE THE SURROUNDING GROUND SURFACE. ROADSIDE SIGNS SHALL NOT HANG OVER THE ROADWAY. SIGN PLACEMENT SHALL COMPLY WITH RS1 OF THE MOST CURRENT CALTRANS STANDARD PLANS.
3. SIGN POSTS SHALL BE 4" X 4" TREATED WOOD PER SECTION 82-3, "ROADSIDE SIGNS" OF THE MOST CURRENT CALTRANS STANDARD SPECIFICATIONS. SIGN POSTS SHALL BE PLACED SO THAT THEY COMPLY WITH ADA (FACILITY ACCESSIBILITY) REQUIREMENTS. SIGN POSTS SHALL BE PLACED IN COMPACTED NATIVE SOIL PER RS2 OF THE MOST CURRENT CALTRANS STANDARD PLANS. IT IS PREFERRED THAT SIGNS BE INSTALLED BEHIND SIDEWALKS, BUT IF SIGN POSTS ARE TO BE INSTALLED IN CONCRETE SIDEWALKS, THEN A 1' X 1' SQUARE, 1/2-INCH DEEP JOINT OR SAWCUT SHALL BE PLACED AROUND THE SIGN POST IN THE SIDEWALK. SIGNS SHALL BE MOUNTED ON SIGN POSTS USING SIGN PANEL FASTENING HARDWARE PER RS2 OF THE MOST CURRENT CALTRANS STANDARD PLANS, SECTION 82-3, "ROADSIDE SIGNS" OF THE MOST CURRENT CALTRANS STANDARD SPECIFICATIONS, AND AS SPECIFIED BY THE SIGN FILM MANUFACTURER.
4. SIGNS TO BE INSTALLED ON COUNTY OF SAN DIEGO – MAINTAINED STREET LIGHT POLES, TRAFFIC SIGNAL POLES, AND FLASHERS SHALL BE INSTALLED AS APPROVED BY THE RESIDENT ENGINEER PER THE PLAN OR WITH APPROVED STAINLESS STEEL BAND CLAMPS OR OTHER APPROVED HARDWARE THAT IS APPROPRIATE FOR THE WIND LOADING.
5. STREET NAME SIGNS SHALL BE INSTALLED PER THE MOST CURRENT COUNTY OF SAN DIEGO DESIGN STANDARD DRAWINGS DS-13A THROUGH DS-13G.
6. THE RESIDENT ENGINEER SHALL APPROVE ALL SIGN INSTALLATION LOCATIONS PRIOR TO THE CONTRACTOR INSTALLING THE SIGNS. ALL TRAFFIC SIGNS SHALL BE READILY VISIBLE TO ALL MOTORISTS DRIVING AT THE PREVAILING SPEED AS WELL AS ALL OTHER ROADWAY USERS (BICYCLISTS, EQUESTRIANS, AND PEDESTRIANS). IF THE VISIBILITY OF THE TRAFFIC SIGN IS BLOCKED, THEN THE CONTRACTOR WITH THE RESIDENT ENGINEER'S APPROVAL SHALL EITHER RELOCATE THE SIGN OR REMOVE THE OBSTRUCTIONS (SUCH AS VEGETATION, ROCKS, PRIVATE SIGNS, AND MINOR EMBANKMENTS THROUGH MINOR GRADING) THAT BLOCK THE VISIBILITY OF THE SIGN.

NOTE

FOUR-WAY STOP INTERSECTION IS DESIRED BY COUNTY DEPARTMENT OF PUBLIC WORKS.

STOP WARRANTS AND CROSSWALK WARRANTS ARE NOT REQUIRED BY COUNTY FOR THIS PROJECT.

GENERAL NOTE:

THE CONTRACTOR IS RESPONSIBLE FOR THE REMOVAL OF ALL CONFLICTING STRIPING AND PAVEMENT MARKINGS, SANDBLASTING/GRINDING AND SAND SEALING.

SIGN LEGEND:



STRIPING NOTES:

1. THERMOPLASTIC TRAFFIC STRIPES, THERMOPLASTIC PAVEMENT MARKINGS, AND PAVEMENT MARKERS
2. CONTRACTOR SHALL BE RESPONSIBLE FOR THE REPLACEMENT OF ALL TRAFFIC STRIPES, PAVEMENT MARKINGS, AND PAVEMENT MARKERS OBLITERATED BY THE CONSTRUCTION OF THIS PROJECT. CONTRACTOR SHALL BE RESPONSIBLE FOR THE REMOVAL OF ALL CONFLICTING AND REDUNDANT TRAFFIC STRIPES, PAVEMENT MARKINGS, AND PAVEMENT MARKERS IN THIS PROJECT. CONTRACTOR SHALL BE RESPONSIBLE FOR THE INSTALLATION OF ALL NEW TRAFFIC STRIPES, PAVEMENT MARKINGS, AND PAVEMENT MARKERS FOR THIS PROJECT.
3. INSTALLATION OF THERMOPLASTIC TRAFFIC STRIPES AND THERMOPLASTIC PAVEMENT MARKINGS SHALL CONFORM TO SECTION 84-1, "GENERAL" AND 84-2, "TRAFFIC STRIPES AND PAVEMENT MARKINGS", OF THE MOST CURRENT CALTRANS STANDARD SPECIFICATIONS AND THE FOLLOWING:
4. CONTROL OF THE ALIGNMENT AND LAYOUT SHALL BE THE RESPONSIBILITY OF THE CONTRACTOR AND SUBJECT TO APPROVAL BY THE ENGINEER. TRAFFIC STRIPES SHALL BE REMOVED BY SANDBLASTING / GRINDING AND THEN SAND SEALED. CONTRACTOR TO PROVIDE AND INSTALL PAVEMENT MARKERS.
5. SECTION 84-2.02, "MATERIALS", OF THE STANDARD SPECIFICATIONS IS AMENDED TO READ:
6. THERMOPLASTIC MATERIAL SHALL BE FREE OF LEAD AND CHROMIUM, AND SHALL CONFIRM TO THE REQUIREMENTS IN STATE SPECIFICATION PTH-02SPRAY, PTH-02HYDRO, OR PTH-02ALKYD.
7. FOR EACH BATCH OF THERMOPLASTIC MATERIAL FOR TRAFFIC STRIPES AND PAVEMENT MARKINGS, THE CONTRACTOR SHALL SUBMIT TO THE ENGINEER:
   1. CERTIFICATE OF COMPLIANCE UNDER SECTION 6-2.03C, "CERTIFICATES OF COMPLIANCE," OF THE STANDARD SPECIFICATIONS
   2. DEPARTMENT'S MATERIALS ENGINEERING AND TESTING SERVICES NOTIFICATION LETTER STATING THAT THE MATERIAL IS APPROVED FOR USE
   3. MATERIAL SAFETY DATA SHEET
8. GLASS BEADS MAYBE APPLIED BY HAND ON THERMOPLASTIC PAVEMENT MARKINGS.
9. THERMOPLASTIC TRAFFIC STRIPES AND PAVEMENT MARKINGS SHALL BE FREE OF RUNS, BUBBLES, CRATERS, DRAG MARKS, STRETCH MARKS, AND DEBRIS.
10. THE SURFACE OF THE THERMOPLASTIC MATERIAL UPON APPLICATION SHALL PROVIDE A MINIMUM SKID RESISTANCE VALUE OF 60 BPN WHEN TESTED ACCORDING TO ASTM E 303. DOCUMENTATION DETAILING MANUFACTURE'S MINIMUM SKID RESISTANCE FOR PERFORMED THERMOPLASTIC MATERIAL SHALL BE PROVIDED TO THE ENGINEER PRIOR TO COMMENCEMENT OF TRAFFIC STRIPES AND PAVEMENT MARKING OPERATIONS.
11. PAVEMENT MARKER SHALL CONFORM TO SECTION 81-3, "PAVEMENT MARKERS," OF THE MOST CURRENT CALTRANS STANDARD SPECIFICATIONS, AND THE FOLLOWING PROVISIONS:
12. PAVEMENT MARKER HEIGHT SHALL BE 0.70-INCH MINIMUM. "LOW PROFILE" TYPE MARKERS WILL NOT BE ACCEPTABLE.

C-4

DON BLOODWORTH
No. C 69554
REGISTERED PROFESSIONAL ENGINEER
12/18/2020
CIVIL
STATE OF CALIFORNIA

KLEINFELDER
Bright People. Right Solutions.

REGISTERED ENGINEER DATE

DEPARTMENT OF PARKS AND RECREATION
COUNTY OF SAN DIEGO
5500 OVERLAND DRIVE, SUITE 410 SAN DIEGO, CALIFORNIA 92123

COUNTY OF SAN DIEGO PARKS AND RECREATION

NO.	REVISIONS	APPR.	DATE

DESIGNED BY: JAB
DRAWN BY: JM
CHECKED BY: RO
PROJECT MANAGER: DB

LAKESIDE EQUESTRIAN FACILITY
INTERSECTION PLAN

SCALE: AS SHOWN
PROJ. NO.: 1020367
FILE NO.:
SHEET 7 OF 34

C:\pwworking\kleinfelderpw01\jmaninang@kleinfelder.com\d01926161\1020367-C003-INTERSECTION PLAN_100%.dwg Friday, Feb. 07 2020 10:39am JManinang

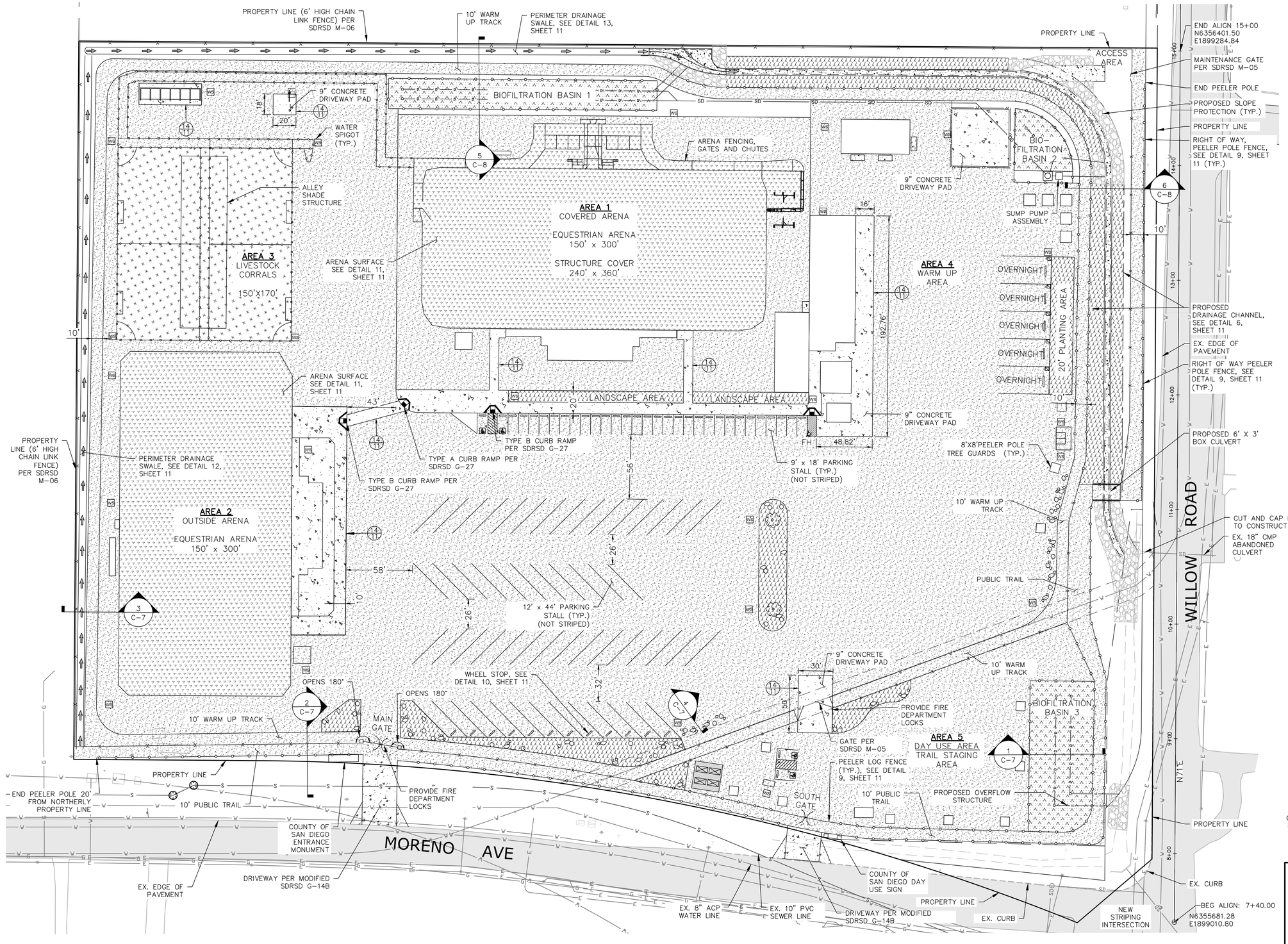

LEGEND:

- FH — FIRE HYDRANT
- SOLAR LIGHT (MOTION CENSORED)
- WS — WATER SPIGOT
- DOUBLE SWING GATE (MANUAL)
- RV — RV HOOK-UPS
- C-6 — DETAIL REFERENCE
- 6 / C-9 — SECTION REFERENCE
- LANDSCAPE BY OTHERS (SEE PLANTING PLANS)
- BIOFILTRATION PLANTING
- SLOPE PROTECTION / OUTLET PROTECTION
- EXISTING ASPHALT PAVEMENT
- CONCRETE
- NATIVE SOIL
- STABILIZED DECOMPOSED GRANITE (SEE DETAIL 7 OF SHEET 11)
- LIVESTOCK FOOTING MATERIAL

NOTES:

SEE SITE ELECTRICAL PLAN FOR LIGHTING LOCATIONS AND DETAILS.

LIST OF STRUCTURES AND FEATURES TO BE PROVIDED BY OTHERS.

C-5

REGISTERED PROFESSIONAL ENGINEER — DON BLOODWORTH — No. E 60064 — Exp. 12/31/2020 — CIVIL — STATE OF CALIFORNIA

KLEINFELDER — Bright People. Right Solutions.

REGISTERED ENGINEER DATE

DEPARTMENT OF PARKS AND RECREATION
COUNTY OF SAN DIEGO
5500 OVERLAND DRIVE, SUITE 410 SAN DIEGO, CALIFORNIA 92123

COUNTY OF SAN DIEGO PARKS AND RECREATION

NO.	REVISIONS	APPR.	DATE

DESIGNED BY: JAB
DRAWN BY: JM
CHECKED BY: RO
PROJECT MANAGER: DB

LAKESIDE EQUESTRIAN FACILITY

SITE PLAN (FOR CONSTRUCTION)

SCALE: AS SHOWN
PROJ. NO.: 1020367
FILE NO.:
SHEET 8 OF 34

C:\pworking\kleinfelder\pw01\jmanning@kleinfelder.com\d0192616\I1020367-C000-SITE PLAN_Construction.dwg Friday, Feb. 07 2020 10:19am JManning

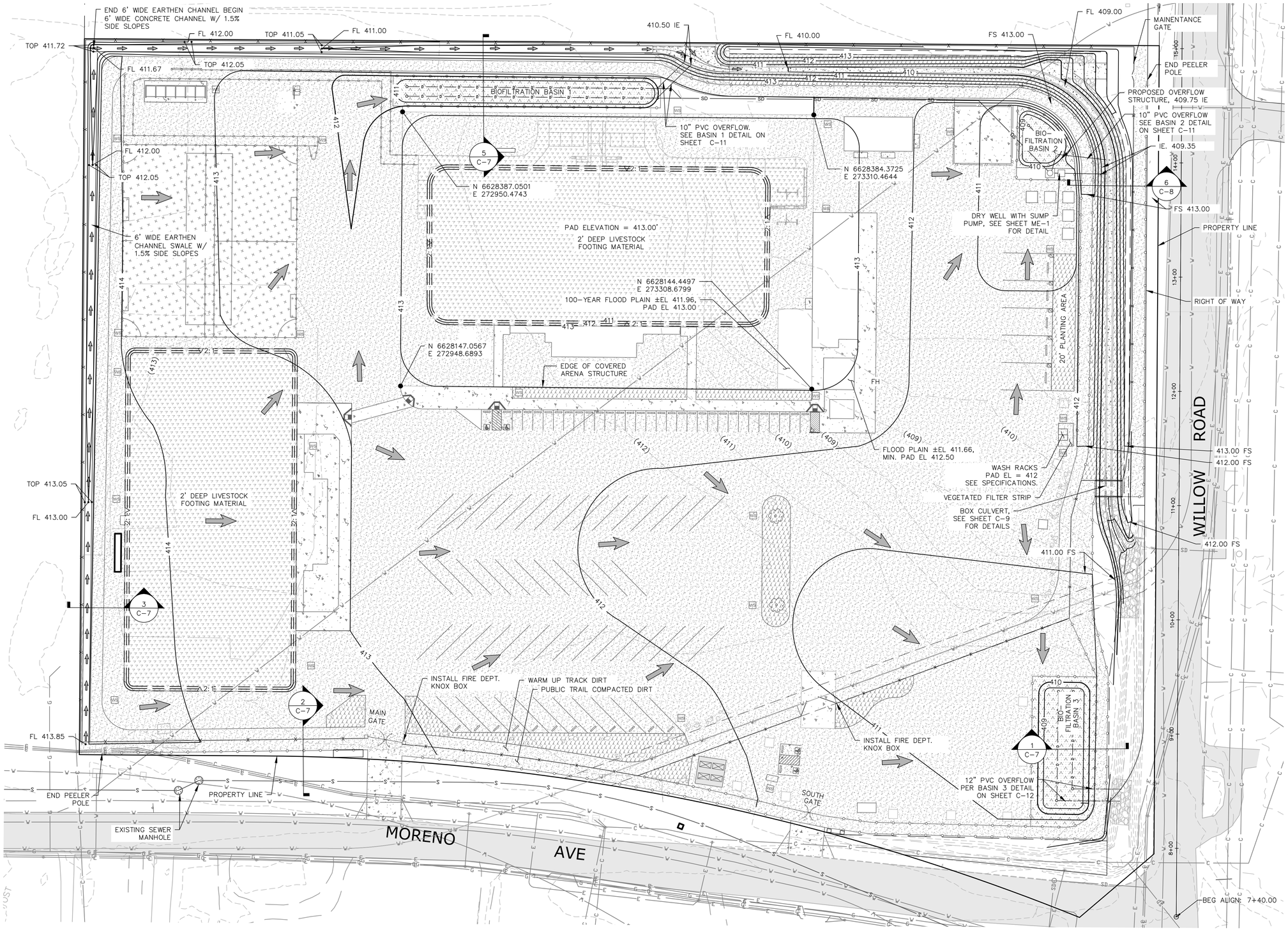

LEGEND:

- EXISTING MAJOR CONTOUR
- EXISTING MINOR CONTOUR
- 410 PROPOSED MAJOR CONTOUR
- 414 PROPOSED MINOR CONTOUR
- FLOW DIRECTION
- DECOMPOSED GRANITE (SEE DETAIL 6, SHEET 7)
- SLOPE PROTECTION/ RIP RAP OUTLET PROTECTION
- PROPOSED CONCRETE

GRADING SUMMARY

GRADED AREA = 13.54 AC

CUT QUANTITIES = 23,197 CY APPROXIMATE

FILL QUANTITIES = 16,910 CY APPROX.

NET = 6,287 CY (TO BE SPREAD ON SITE OR HAULED OFF)

PUBLIC TRAIL D.G. = 230 CY APPROXIMATE

VEHICULAR AND PEDESTRIAN AREAS D.G. = 3,645 CY APPROXIMATE
AGGREGATE BASE FOR VEHICULAR AND PEDESTRIAN AREAS = 5,467 CY APPRXOIMATE

BIOFILTRATION BASIN MATERIAL = 1,540 CY APPROXIMATE

INDOOR ARENA = 651 CY APPROXIMATE
AGGREGATE BASE FOR INDOOR ARENA= 326 CY APPROXIMATE

LIVESTOCK FOOTING MATERIAL = 6,901 CY APPROXIMATE

0 40 80
SCALE: 1" = 40' SCALE IN FEET

PDS BUILDING PERMIT NO.

C-6

REGISTERED PROFESSIONAL ENGINEER
JASON ADAM BROWN
No. C 86395
Exp. 03/31/2021
CIVIL
STATE OF CALIFORNIA

KLEINFELDER
Bright People. Right Solutions.

REGISTERED ENGINEER DATE

DEPARTMENT OF PARKS AND RECREATION
COUNTY OF SAN DIEGO
5500 OVERLAND DRIVE, SUITE 410 SAN DIEGO, CALIFORNIA 92123

COUNTY OF SAN DIEGO PARKS AND RECREATION

NO.	REVISIONS	APPR.	DATE

DESIGNED BY: JAB
DRAWN BY: JM
CHECKED BY: RO
PROJECT MANAGER: DB

LAKESIDE EQUESTRIAN FACILITY
GRADING PLAN

SCALE AS SHOWN
PROJ. NO. 1020367
FILE NO.
SHEET 9 OF 34

C:\pwworking\kleinfelderpw01\jmaninang@kleinfelder.com\d0192616\1020367-C005-GRADING PLAN_100%.dwg Friday, Feb. 07 2020 10:20am JManinang

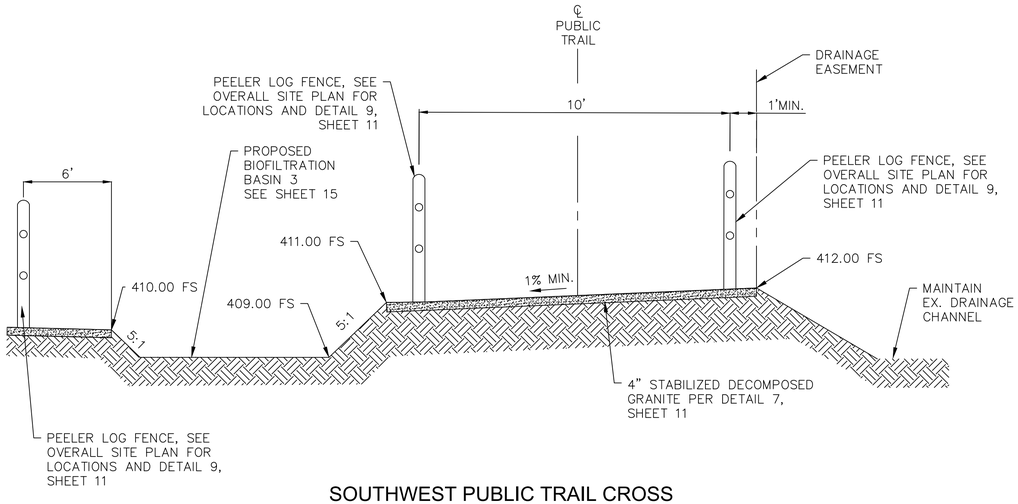

1 SOUTHWEST PUBLIC TRAIL CROSS SECTION DETAIL
NTS

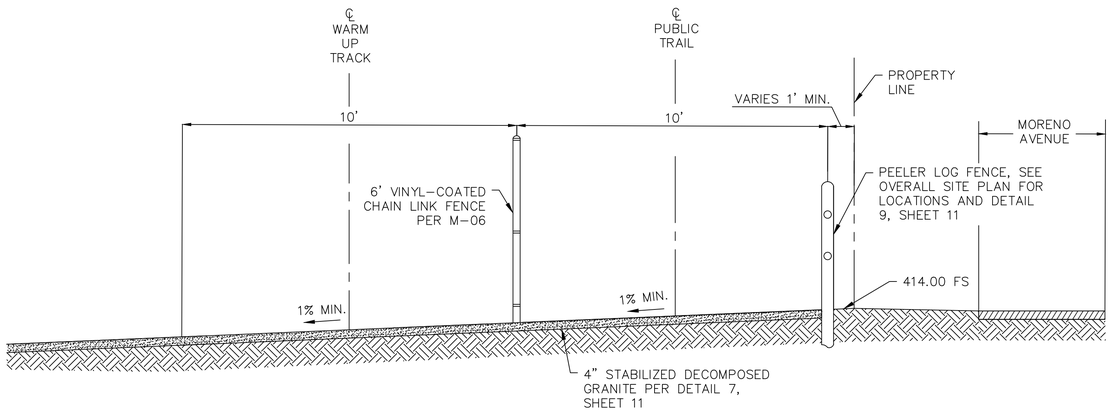

2 NORTHWEST PROPERTY LINE WARM UP TRACK AND PUBLIC TRAIL CROSS SECTION DETAIL
NTS

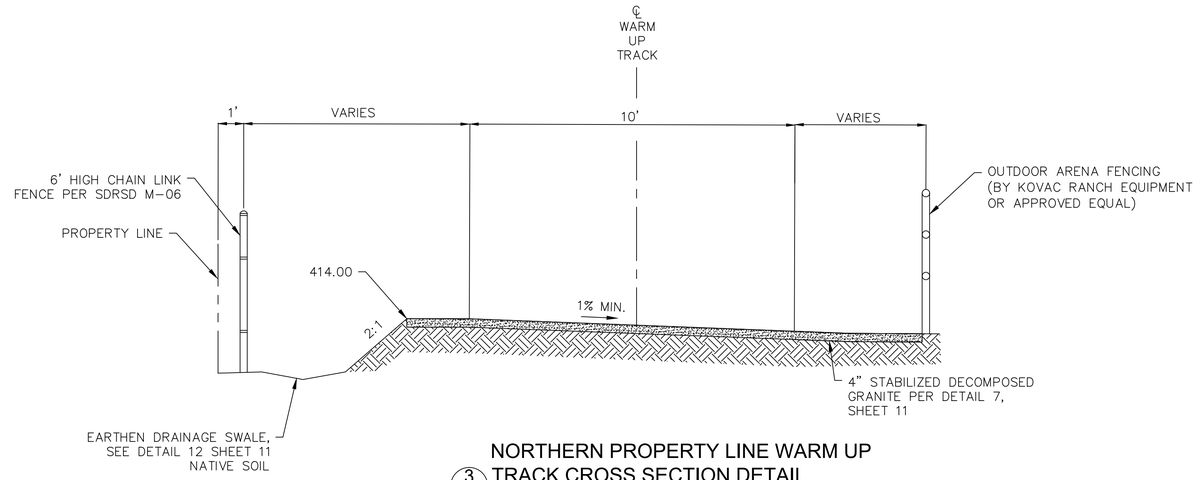

3 NORTHERN PROPERTY LINE WARM UP TRACK CROSS SECTION DETAIL
NTS

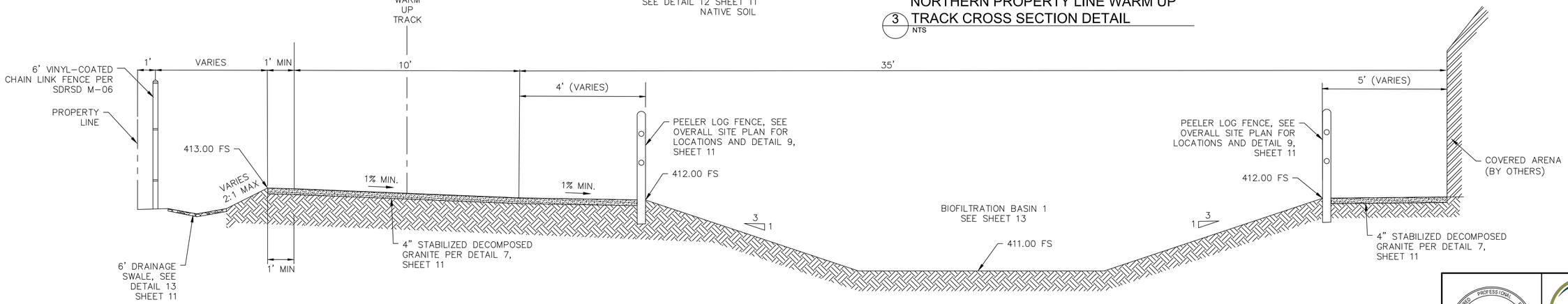

5 NORTHEASTERN PROPERTY LINE WARM UP TRACK CROSS SECTION DETAIL
NTS

C-7

REGISTERED PROFESSIONAL ENGINEER
JASON ADAM BROWN
No. C 86398
Exp. 03/31/2021
CIVIL
STATE OF CALIFORNIA

KLEINFELDER
Bright People. Right Solutions.

REGISTERED ENGINEER DATE

DEPARTMENT OF PARKS AND RECREATION
COUNTY OF SAN DIEGO
5500 OVERLAND DRIVE, SUITE 410 SAN DIEGO, CALIFORNIA 92123

COUNTY OF SAN DIEGO PARKS AND RECREATION

NO.	REVISIONS	APPR.	DATE

DESIGNED BY: JAB
DRAWN BY: JM
CHECKED BY: RO
PROJECT MANAGER: DB

LAKESIDE EQUESTRIAN FACILITY
CIVIL DETAILS (TYPICAL SECTIONS 1)

SCALE AS SHOWN
PROJ. NO. 1020367
FILE NO.
SHEET 10 OF 34

C:\pwworking\kleinfelderpw01\jmaninang@kleinfelder.com\d0192616\1020367-C006-DETAILS_100%.dwg Friday, Feb. 07 2020 10:20am JManinang

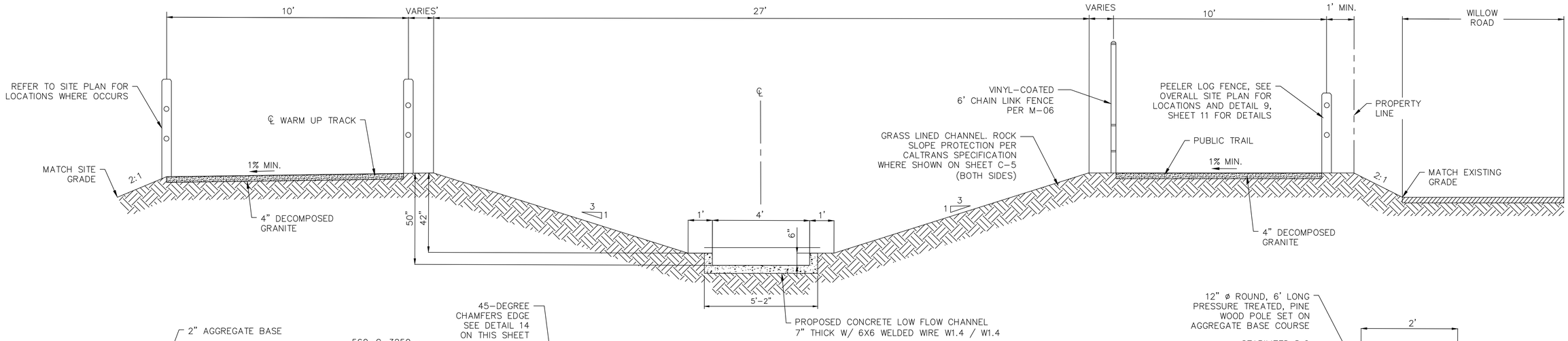

6 DRAINAGE CHANNEL A
NTS

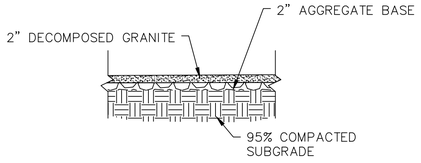

TEMPORARY DECOMPOSED GRANITE SURFACE
7A INITIAL VEHICULAR APPLICATION
NTS

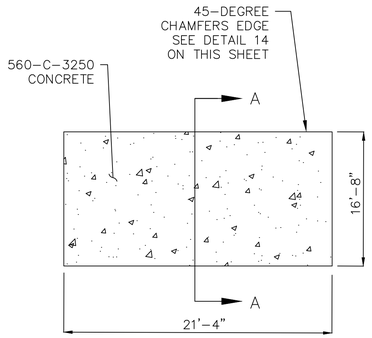

PLAN VIEW

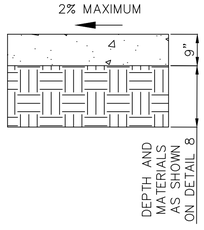

ELEVATION VIEW

8A TRASH PAD
NTS

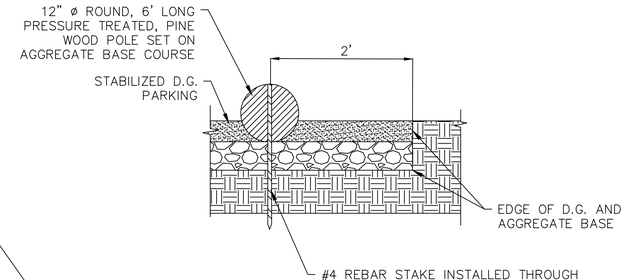

10 WHEEL STOP
NTS

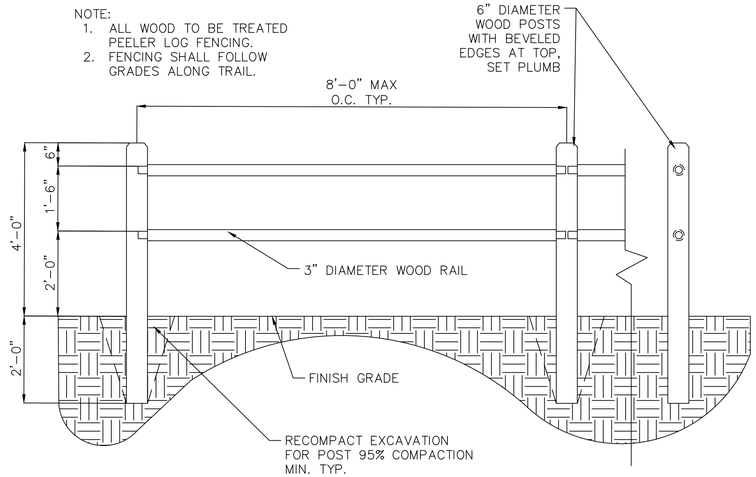

9 PEELER LOG FENCE
NTS

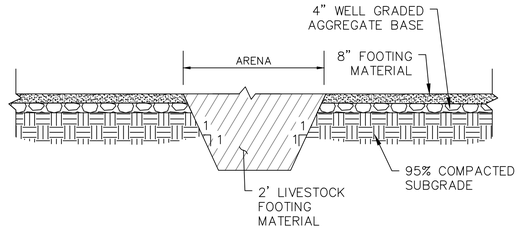

NOTE:
DETAIL TO BE VERIFIED AND ADJUSTED AS NEEDED BY QUALIFIED FOOTING MATERIAL SUPPLIER.

11 ARENA SURFACE CROSS SECTION
NTS

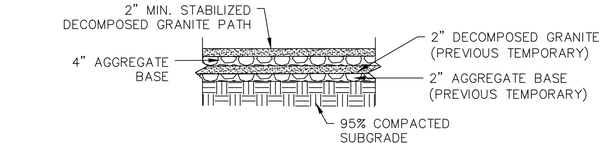

TEMPORARY DECOMPOSED GRANITE SURFACE
7B FINAL VEHICULAR APPLICATION
NTS

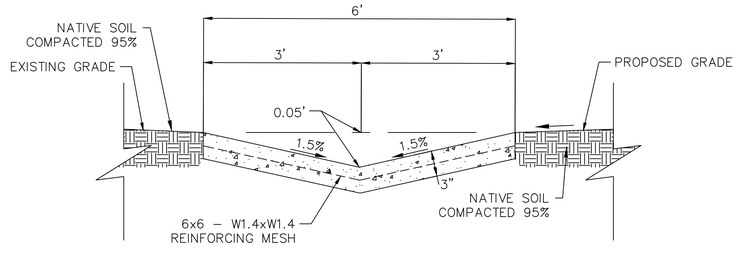

13 CONCRETE DRAINAGE SWALE
NTS

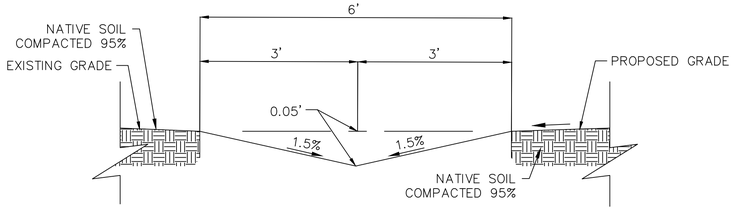

12 EARTHEN DRAINAGE SWALE
NTS

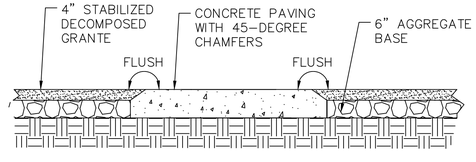

CONCRETE EDGE CONNECTION TO DG SURFACING
14 NTS

C-8

REGISTERED PROFESSIONAL ENGINEERS
JASON ADAM BROWN
No. C 86395
Exp. 03/31/2021
CIVIL
STATE OF CALIFORNIA

KLEINFELDER
Bright People. Right Solutions.

REGISTERED ENGINEER DATE

DEPARTMENT OF PARKS AND RECREATION
COUNTY OF SAN DIEGO
5500 OVERLAND DRIVE, SUITE 410 SAN DIEGO, CALIFORNIA 92123

COUNTY OF SAN DIEGO PARKS AND RECREATION

NO.	REVISIONS	APPR.	DATE

DESIGNED BY: JAB
DRAWN BY: JM
CHECKED BY: RO
PROJECT MANAGER: DB

LAKESIDE EQUESTRIAN FACILITY
CIVIL DETAILS (TYPICAL SECTIONS 2)

SCALE AS SHOWN
PROJ. NO. 1020367
FILE NO.
SHEET 11 OF 34

C:\pwworking\kleinfelderpwx01\jmanning@kleinfelder.com\d0192616\1020367-C006-DETAILS_100%.dwg Friday, Feb. 07 2020 10:20am JManning

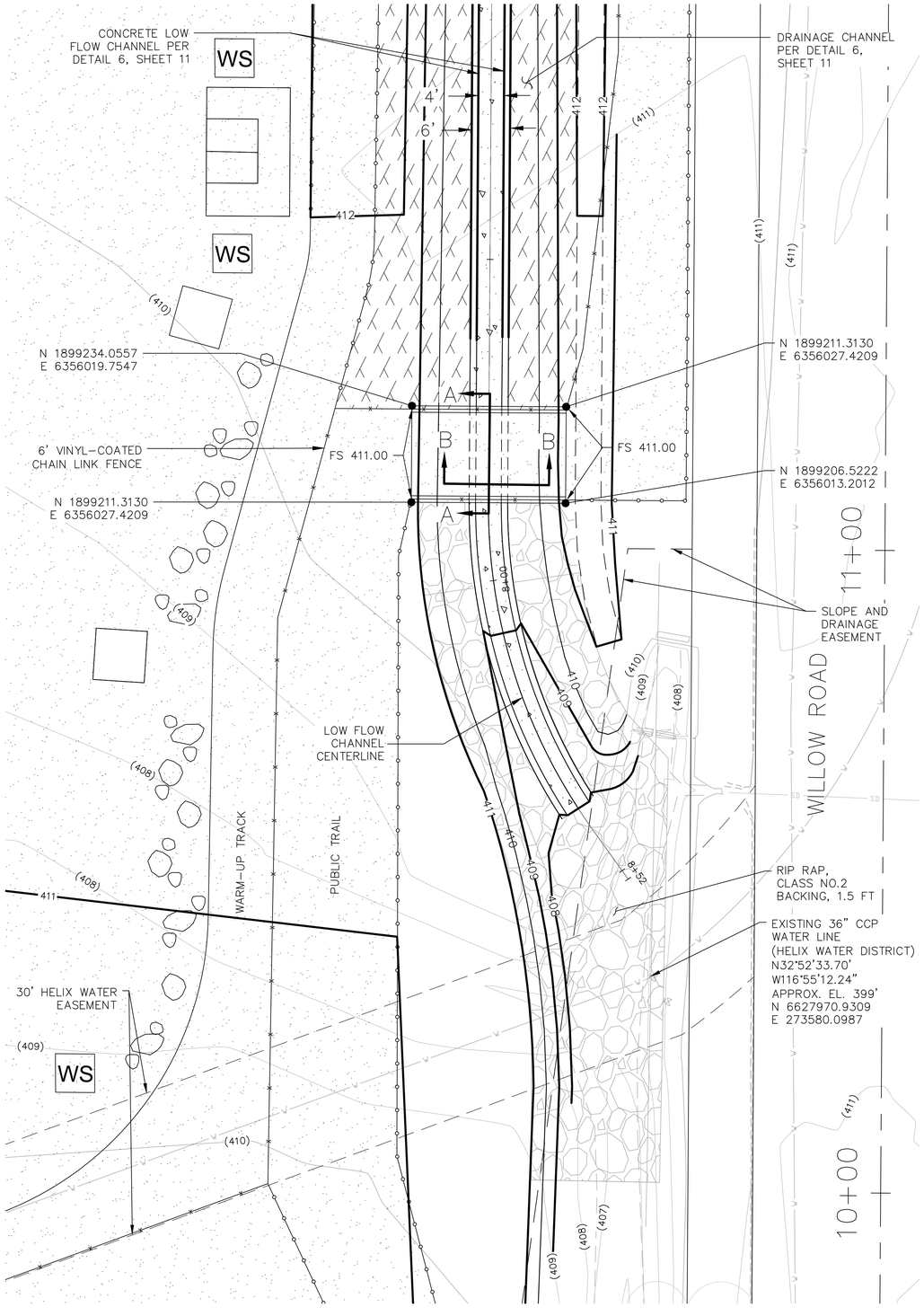

PLAN VIEW BOX CULVERT

SCALE: 1" = 10 SCALE IN FEET (0, 10, 20)

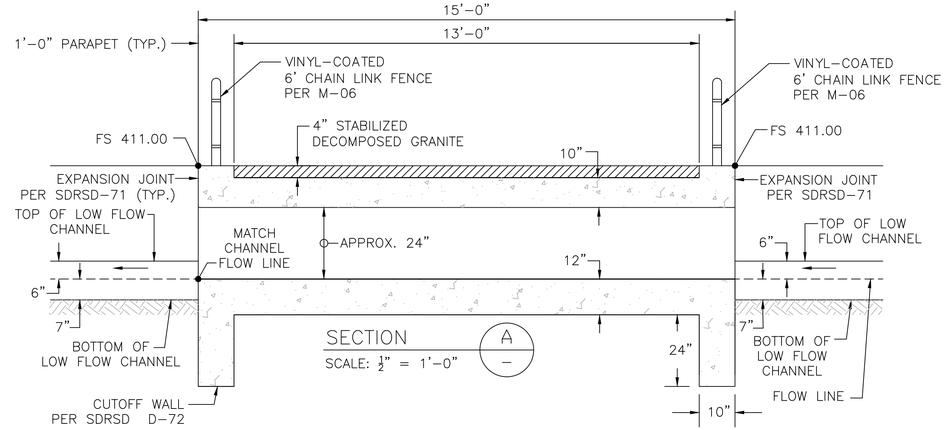

SECTION A
SCALE: ½" = 1'-0"

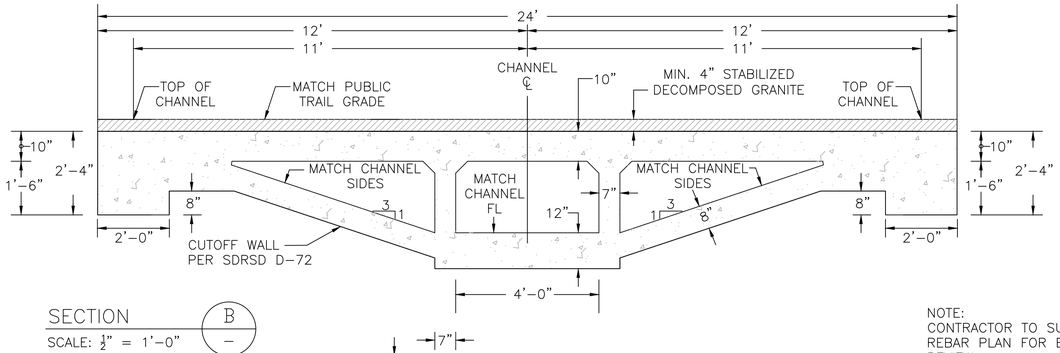

SECTION B
SCALE: ½" = 1'-0"

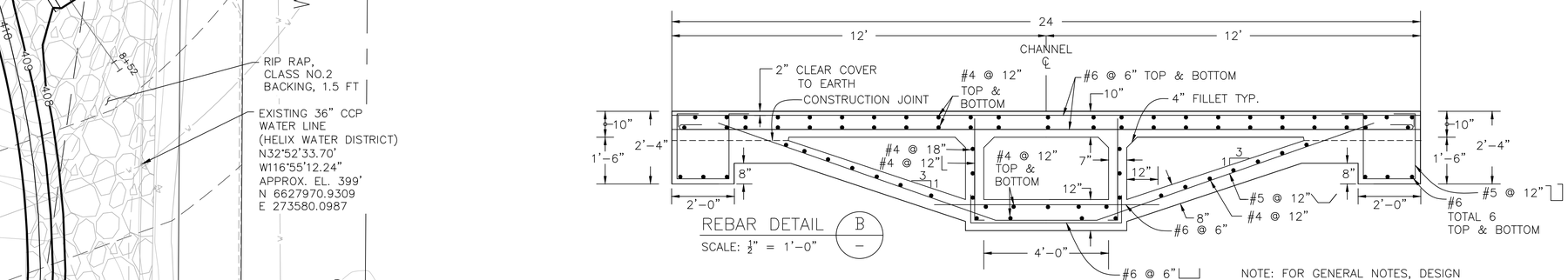

NOTE:
CONTRACTOR TO SUBMIT REBAR PLAN FOR ENGINEER REVIEW.

REBAR DETAIL B
SCALE: ½" = 1'-0"

NOTE: FOR GENERAL NOTES, DESIGN NOTES, AND CONSTRUCTION NOTES, SEE SDRSD D-81A

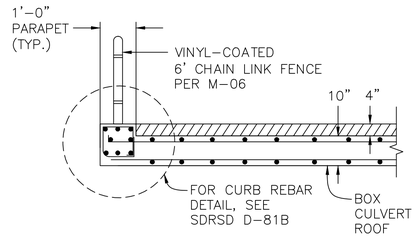

C-9

REGISTERED ENGINEER — DATE

DON BLOODWORTH
No. C 69954
Exp. 12/31/2020
CIVIL
REGISTERED PROFESSIONAL ENGINEER
STATE OF CALIFORNIA

KLEINFELDER
Bright People. Right Solutions.

DEPARTMENT OF PARKS AND RECREATION
COUNTY OF SAN DIEGO
5500 OVERLAND DRIVE, SUITE 410 SAN DIEGO, CALIFORNIA 92123

COUNTY OF SAN DIEGO PARKS AND RECREATION

NO.	REVISIONS	APPR.	DATE

DESIGNED BY: JAB
DRAWN BY: JM
CHECKED BY: RO
PROJECT MANAGER: DB

LAKESIDE EQUESTRIAN FACILITY

BOX CULVERT DETAILS

SCALE: AS SHOWN
PROJ. NO. 1020367
FILE NO.
SHEET 12 OF 34

C:\pw\working\kleinfelderpw01\jmarinang@kleinfelder.com\d1926161\1020367\Details Box Culvert_100% dwg Friday, Feb. 07 2020 10:30am JMarinang

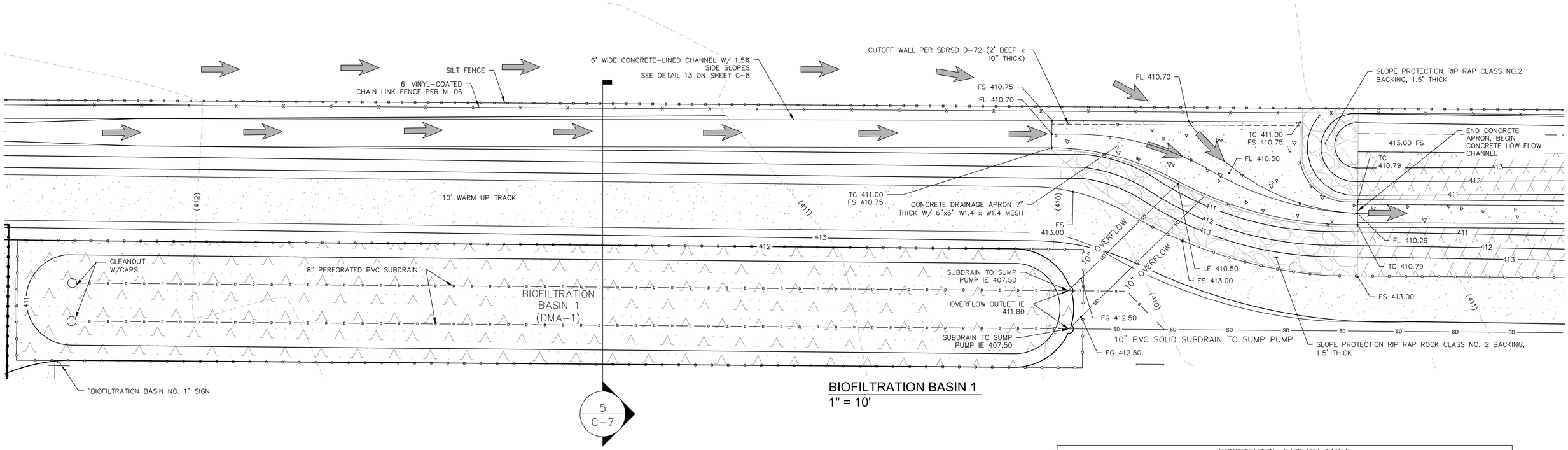

BIOFILTRATION BASIN 1
1" = 10'

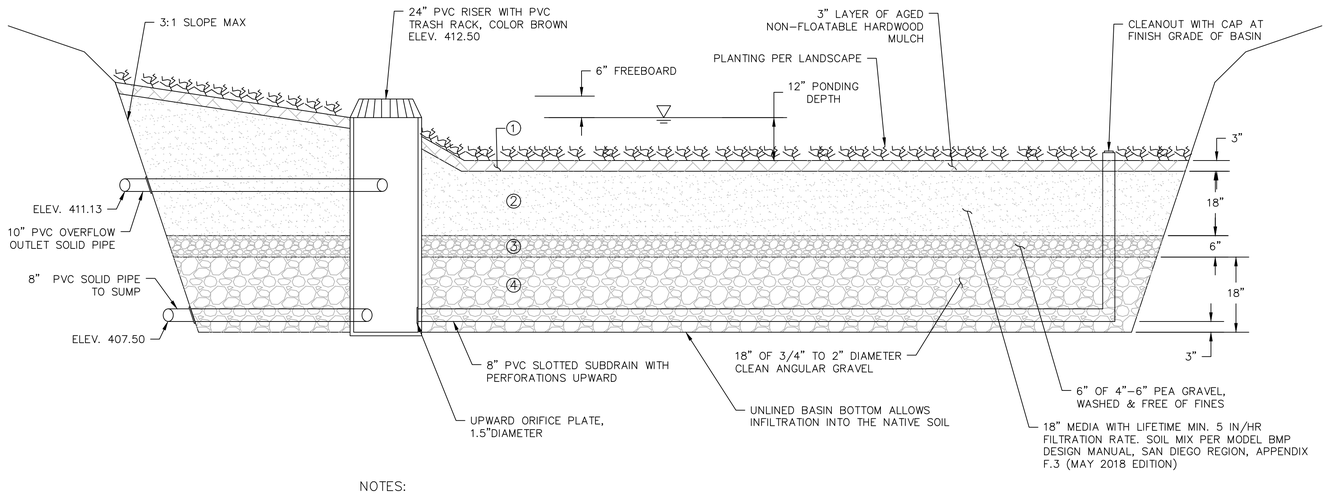

NOTES:
1. ALL STONE LAYERS MUST BE CLEAN AND FREE OF FINE GRANULAR MATERIAL

BIOFILTRATION BASIN #1 SECTION
N.T.S.

BIORETENTION FACILITY TABLE				
BMP ID	TOP WIDTH (FT)	BOTTOM WIDTH (FT)	TOP LENGTH (FT)	ELEV. OF BOTTOM (FT)
WQ-1	23	20	228	411

NOTES:
1. BOTTOM OF FACILITY TO BE FLAT.

BIOFILTRATION BASIN VOLUMES		
①	AGED NON-FLOATABLE HARDWOOD MULCH	40.9 CY
②	18" MEDIA	245.7 CY
③	4"-6" PEA GRAVEL	81.9 CY
④	3/4" TO 2" DIAMETER CLEAN ANGULAR GRAVEL	245.7 CY

LEGEND:
- EXISTING MAJOR CONTOUR
- EXISTING MINOR CONTOUR
- 415 PROPOSED MAJOR CONTOUR
- 415 PROPOSED MINOR CONTOUR
- FLOW DIRECTION

NOTE:
1. SEE SHEET C-13 FOR BIOFILTRATION MAINTENANCE REQUIREMENTS.

0 10 20
SCALE: 1" = 10' SCALE IN FEET

C-10

ROBERT MICHAEL OJEDA
No. C74661
Exp. 12/31/2019
CIVIL
REGISTERED PROFESSIONAL ENGINEER
STATE OF CALIFORNIA

KLEINFELDER
Bright People. Right Solutions.

REGISTERED ENGINEER DATE

DEPARTMENT OF PARKS AND RECREATION
COUNTY OF SAN DIEGO
5500 OVERLAND DRIVE, SUITE 410 SAN DIEGO, CALIFORNIA 92123

COUNTY OF SAN DIEGO PARKS AND RECREATION

NO.	REVISIONS	APPR.	DATE

DESIGNED BY: JAB
DRAWN BY: JM
CHECKED BY: RO
PROJECT MANAGER: DB

LAKESIDE EQUESTRIAN FACILITY
CIVIL DETAILS (BIOFILTRATION BASIN 1 AREA) (DMA-1)

SCALE AS SHOWN
PROJ. NO. 1020367
FILE NO.
SHEET 13 OF 34

C:\pwworking\kleinfelderpw01\jmainnag@kleinfelder.com\d01926161\1020367-BIO_PLAN 100%.dwg Friday, Feb. 07 2020 10:21am JMainnag

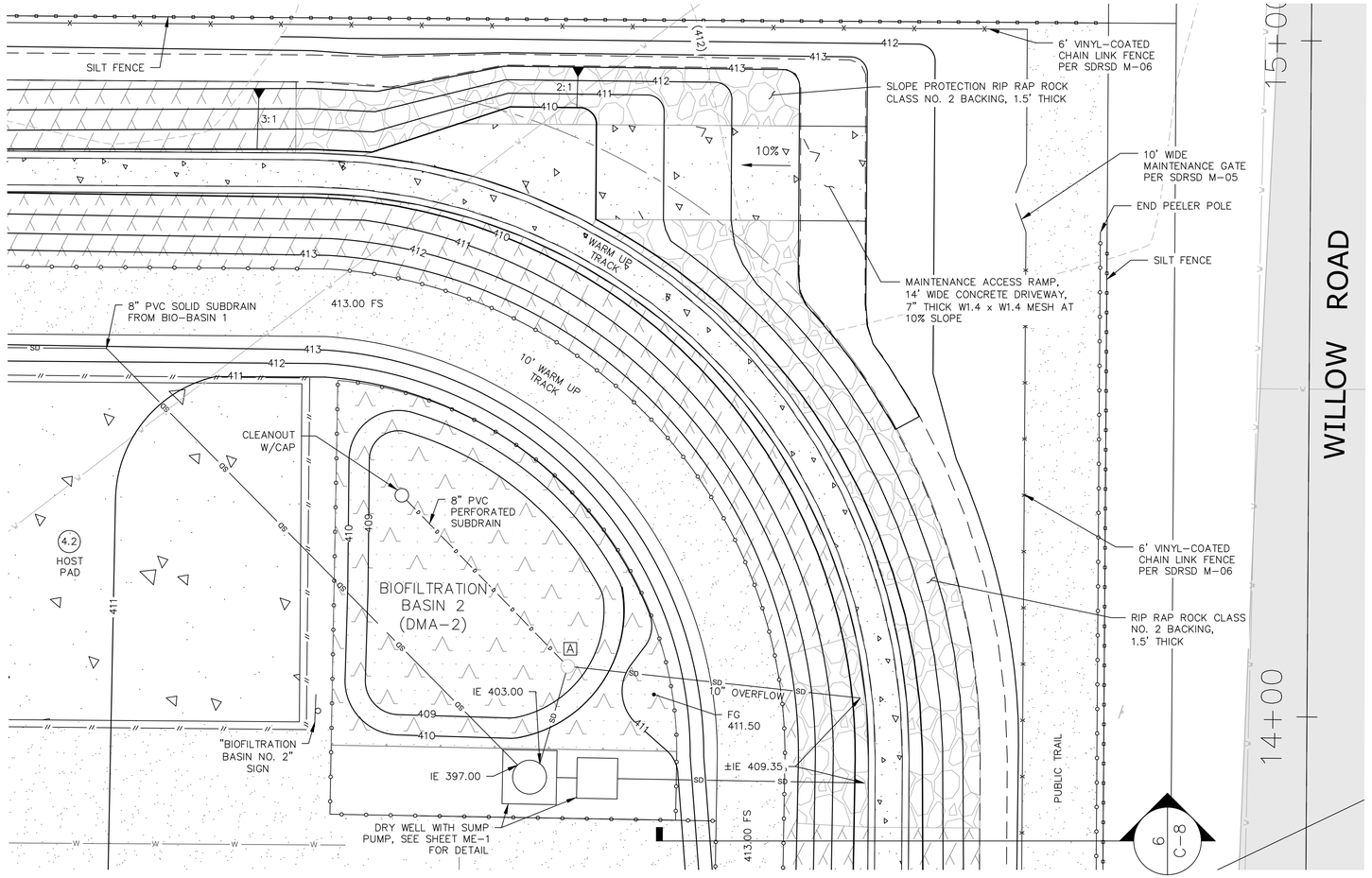

CONSTRUCTION NOTES:

A 24" PVC RISER WITH TRASH RACK
OVERFLOW OUT IE 409.75
SUBDRAIN IN IE 405.75
SUBDRAIN OUT IE 405.75

BIOFILTRATION BASIN 2
1" = 10'

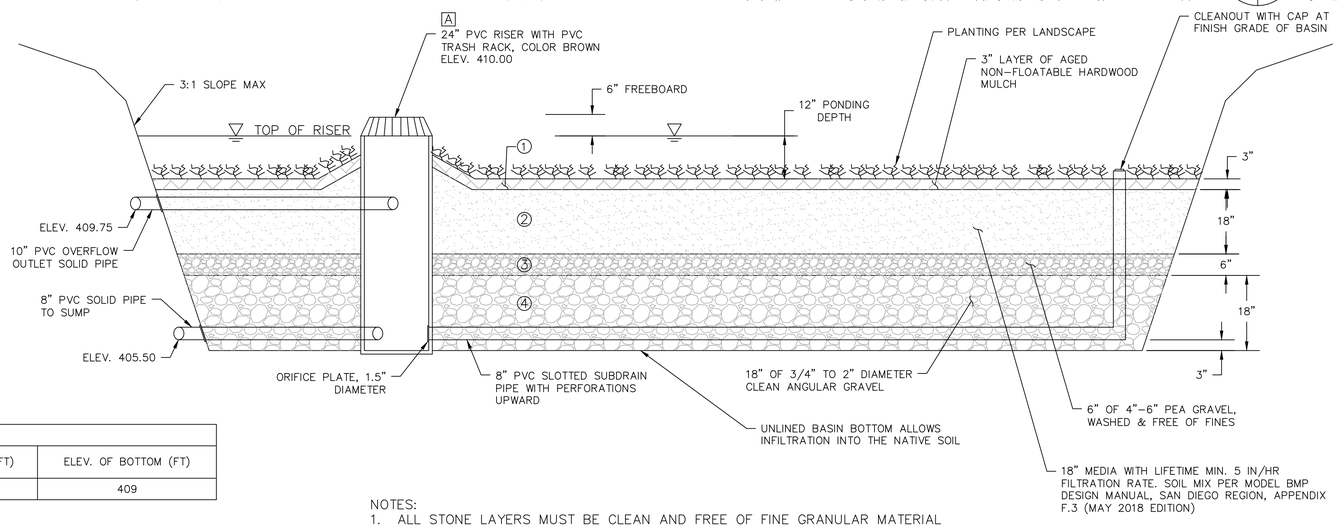

BIOFILTRATION BASIN VOLUMES		
1	AGED NON-FLOATABLE HARDWOOD MULCH	14.5 CY
2	18" MEDIA	87.3 CY
3	4"-6" PEA GRAVEL	29.1 CY
4	3/4" TO 2" DIAMETER CLEAN ANGULAR GRAVEL	87.3 CY

BIORETENTION FACILITY TABLE				
BMP ID	TOP WIDTH (FT)	BOTTOM WIDTH (FT)	TOP LENGTH (FT)	ELEV. OF BOTTOM (FT)
WQ-2	53	38	64	409

NOTES:
1. BOTTOM OF FACILITY TO BE FLAT.

NOTES:
1. ALL STONE LAYERS MUST BE CLEAN AND FREE OF FINE GRANULAR MATERIAL

BIOFILTRATION BASIN # 2 SECTION
N.T.S.

LEGEND:

- EXISTING MAJOR CONTOUR
- EXISTING MINOR CONTOUR
- 410 PROPOSED MAJOR CONTOUR
- 411 PROPOSED MINOR CONTOUR
- FLOW DIRECTION

NOTE:
1. SEE SHEET C-13 FOR BIOFILTRATION MAINTENANCE REQUIREMENTS.

0 10 20
SCALE: 1" = 10' SCALE IN FEET

C-11

REGISTERED ENGINEER DATE

ROBERT MICHAEL OJEDA
No. C74661
Exp. 12/31/2019
CIVIL
STATE OF CALIFORNIA
REGISTERED PROFESSIONAL ENGINEER

KLEINFELDER
Bright People. Right Solutions.

DEPARTMENT OF PARKS AND RECREATION
COUNTY OF SAN DIEGO
5500 OVERLAND DRIVE, SUITE 410 SAN DIEGO, CALIFORNIA 92123

COUNTY OF SAN DIEGO PARKS AND RECREATION

NO.	REVISIONS	APPR.	DATE

DESIGNED BY: JAB
DRAWN BY: JM
CHECKED BY: RO
PROJECT MANAGER: DB

LAKESIDE EQUESTRIAN FACILITY
CIVIL DETAILS (BIOFILTRATION BASIN 2 AREA) (DMA-2)

SCALE: AS SHOWN
PROJ. NO.: 1020367
FILE NO.:
SHEET 14 OF 34

C:\pwworking\kleinfelderpw07\jmanning@kleinfelder.com\d01926161\020367-BIO_PLAN 100%.dwg Friday, Feb. 07 2020 10:21am JManning

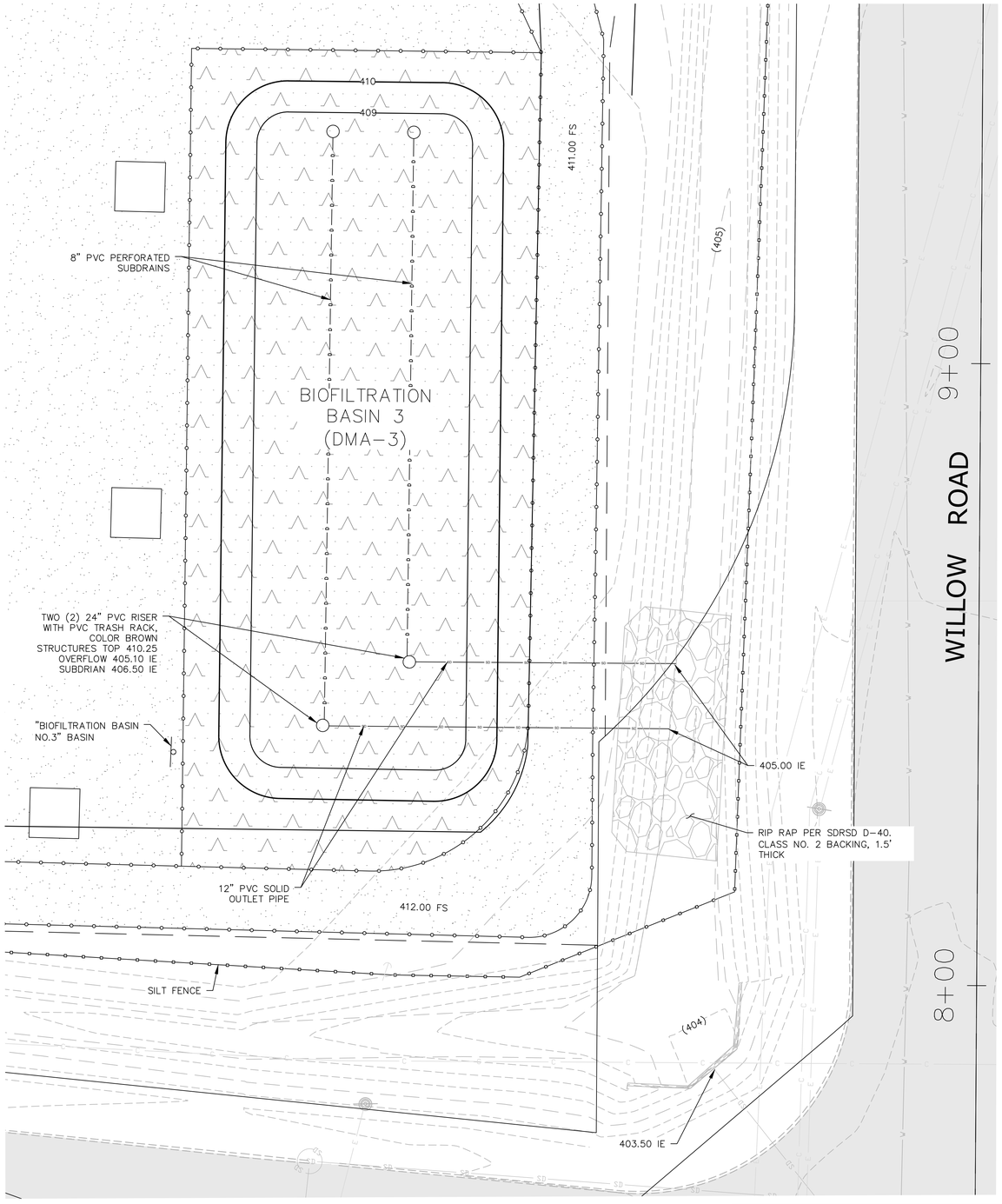

BIOFILTRATION BASIN 3
1" = 10'

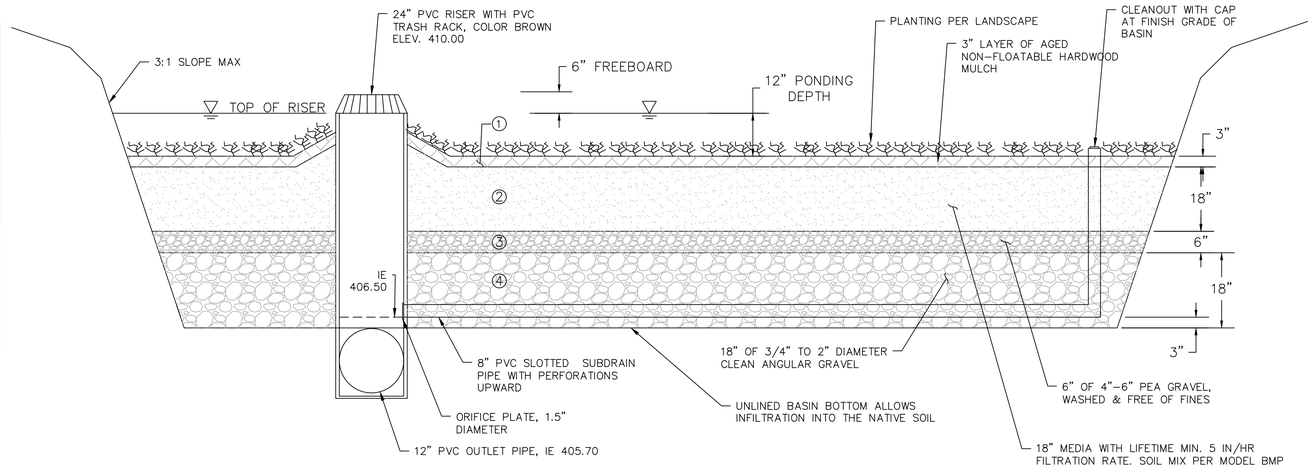

NOTES:
1. ALL STONE LAYERS MUST BE CLEAN AND FREE OF FINE GRANULAR MATERIAL

BIOFILTRATION BASIN #3 SECTION
N.T.S.

BIOFILTRATION BASIN VOLUMES		
1	AGED NON-FLOATABLE HARDWOOD MULCH	47 CY
2	18" MEDIA	282 CY
3	4"-6" PEA GRAVEL	94 CY
4	3/4" TO 2" DIAMETER CLEAN ANGULAR GRAVEL	282 CY

BIOFILTRATION MAINTENANCE

THRESHOLD/INDICATOR	MAINTENANCE ACTION	INSPECTION AND MAINTENANCE FREQUENCY
ACCUMULATION OF SEDIMENT, LITTER, OR DEBRIS	REMOVE AND PROPERLY DISPOSE OF ACCUMULATED MATERIALS, WITHOUT DAMAGE TO THE VEGETATION OR COMPACTION OF THE MEDIA LAYER.	INSPECT MONTHLY. IF THE BMP IS 25% FULL* OR MORE IN ONE MONTH, INCREASE INSPECTION FREQUENCY TO MONTHLY PLUS AFTER EVERY 0.1-INCH OR LARGER STORM EVENT. REMOVE ANY ACCUMULATED MATERIALS FOUND AT EACH INSPECTION.
OBSTRUCTED INLET OR OUTLET STRUCTURE	CLEAR BLOCKAGE.	INSPECT MONTHLY AND AFTER EVERY 0.5-INCH OR LARGER STORM EVENT. REMOVE ANY ACCUMULATED MATERIALS FOUND AT EACH INSPECTION.
DAMAGE TO STRUCTURAL COMPONENTS SUCH AS WEIRS, INLET, OR OUTLET STRUCTURES	REPAIR OR REPLACE AS APPLICABLE.	INSPECT ANNUALLY. MAINTAIN WHEN NEEDED.
POOR VEGETATION ESTABLISHMENT	RE-SEED, RE-PLANT, OR RE-ESTABLISH VEGETATION PER ORIGINAL PLANS.	INSPECT MONTHLY. MAINTAIN WHEN NEEDED.
DEAD OR DISEASED VEGETATION	REMOVE DEAD OR DISEASED VEGETATION, RE-SEED, RE-PLANT, OR RE-ESTABLISH VEGETATION PER ORIGINAL PLANS.	INSPECT MONTHLY. MAINTAIN WHEN NEEDED.
OVERGROWN VEGETATION	MOW OR TRIM AS APPROPRIATE.	INSPECT MONTHLY. MAINTAIN WHEN NEEDED.
2/3 OF MULCH HAS DECOMPOSED, OR MULCH HAS BEEN REMOVED	REMOVE DECOMPOSED FRACTION AND TOP OFF WITH FRESH MULCH TO A TOTAL DEPTH OF 3 INCHES	INSPECT MONTHLY. REPLENISH MULCH ANNUALLY, OR MORE FREQUENTLY WHEN NEEDED BASED ON INSPECTION.
EROSION DUE TO CONCENTRATED IRRIGATION FLOW	REPAIR/RE-SEED/RE-PLANT ERODED AREAS AND ADJUST THE IRRIGATION SYSTEM.	INSPECT MONTHLY. REPLENISH MULCH ANNUALLY, OR MORE FREQUENTLY WHEN NEEDED BASED ON INSPECTION.
EROSION DUE TO CONCENTRATED STORM WATER RUNOFF FLOW	REPAIR/RE-SEED/RE-PLANT ERODED AREAS, AND MAKE APPROPRIATE CORRECTIVE MEASURES SUCH AS ADDING EROSION CONTROL BLANKETS, ADDING STONE AT FLOW ENTRY POINTS, OR MINOR REGRADING TO RESTORE PROPER DRAINAGE ACCORDING TO THE ORIGINAL PLAN. IF THE ISSUE IS NOT CORRECTED BY RESTORING THE BMP TO THE ORIGINAL PLAN AND GRADE, THE COUNTY REVIEWER SHALL BE CONTACTED PRIOR TO ANY ADDITIONAL REPAIRS OR RECONSTRUCTION.	INSPECT AFTER EVERY 0.5-INCH OR LARGER STORM EVENT IF EROSION DUE TO STORM WATER FLOW HAS BEEN OBSERVED, INCREASE INSPECTION FREQUENCY TO AFTER EVERY 0.1-INCH OR LARGER STORM EVENT.
STANDING WATER IN BMP FOR LONGER THAN 24 HOURS FOLLOWING A STORM EVENT SURFACE PONDING LONGER THAN APPROXIMATELY24 HOURS FOLLOWING A STORM EVENT MAY BE DETRIMENTAL TO VEGETATION HEALTH	MAKE APPROPRIATE CORRECTIVE MEASURES SUCH AS ADJUSTING IRRIGATION SYSTEM, REMOVING OBSTRUCTIONS OF DEBRIS OR INVASIVE VEGETATION,CLEARING UNDERDRAINS, OR REPAIRING/REPLACING CLOGGED OR COMPACTED SOILS.	INSPECT MONTHLY AND AFTER EVERY 0.5-INCH OR LARGER STORM EVENT. IF STANDING WATER IS OBSERVED, INCREASE INSPECTION FREQUENCY TO AFTER EVERY 0.1-INCH OR LARGER STORM EVENT. MAINTAIN WHEN NEEDED.
PRESENCE OF MOSQUITOS/LARVAE FOR IMAGES OF EGG RAFTS, LARVA, PUPA, AND ADULT MOSQUITOS, SEE HTTP: //WWW.MOSQUITO.ORG/BIOLOGY	IF MOSQUITOS/LARVAE ARE OBSERVED: FIRST, IMMEDIATELY REMOVE ANY STANDING WATER BY DISPERSING TO NEARBY LANDSCAPING; SECOND, MAKE CORRECTIVE MEASURES AS APPLICABLE TO RESTORE BMP DRAINAGE TO PREVENT STANDING WATER.IF MOSQUITOS PERSIST FOLLOWING CORRECTIVE MEASURES TO REMOVE STANDING WATER, OR IF THE BMP DESIGN DOES NOT MEET THE 96-HOUR DRAWDOWN CRITERIA DUE TO RELEASE RATES CONTROLLED BY AN ORIFICE INSTALLED ON THE UNDERDRAIN, THE COUNTY REVIEWER SHALL BE CONTACTED TO DETERMINE A SOLUTION. A DIFFERENT BMP TYPE, OR A VECTOR MANAGEMENT PLAN PREPARED WITH CONCURRENCE FROM THE COUNTY OF SAN DIEGO DEPARTMENT OF ENVIRONMENTAL HEALTH, MAY BE REQUIRED.	INSPECT MONTHLY AND AFTER EVERY 0.5-INCH OR LARGER STORM EVENT. IF MOSQUITOS ARE OBSERVED, INCREASE INSPECTION FREQUENCY TO AFTER EVERY 0.1-INCH OR LARGER STORM EVENT. MAINTAIN WHEN NEEDED.
UNDERDRAIN CLOGGED	CLEAR BLOCKAGE	INSPECT IF STANDING WATER IS OBSERVED FOR LONGER THAN 24-96 HOURS FOLLOWING A STORM EVENT. MAINTAIN WHEN NEEDED.

LEGEND:
- EXISTING MAJOR CONTOUR
- EXISTING MINOR CONTOUR
- 415 PROPOSED MAJOR CONTOUR
- 415 PROPOSED MINOR CONTOUR
- FLOW DIRECTION

0 20 40
SCALE: 1" = 20' SCALE IN FEET

BIORETENTION FACILITY TABLE				
BMP ID	TOP WIDTH (FT)	BOTTOM WIDTH (FT)	TOP LENGTH (FT)	ELEV. OF BOTTOM (FT)
WQ-3	56	35	125	409

NOTES:
1. BOTTOM OF FACILITY TO BE FLAT.

C-12

REGISTERED ENGINEER DATE

DEPARTMENT OF PARKS AND RECREATION
COUNTY OF SAN DIEGO
5500 OVERLAND DRIVE, SUITE 410 SAN DIEGO, CALIFORNIA 92123

NO.	REVISIONS	APPR.	DATE

DESIGNED BY: JAB
DRAWN BY: JM
CHECKED BY: RO
PROJECT MANAGER: DB

LAKESIDE EQUESTRIAN FACILITY
CIVIL DETAILS (BIOFILTRATION BASIN 3 AREA) (DMA-3)

SCALE: AS SHOWN
PROJ. NO.: 1020367
FILE NO.:
SHEET 15 OF 34

C:\pwworking\kleinfelderpw01\jmanning@kleinfelder.com\d01926161\020367-BIO_PLAN 100%.dwg Friday, Feb. 07 2020 10:21am JManning

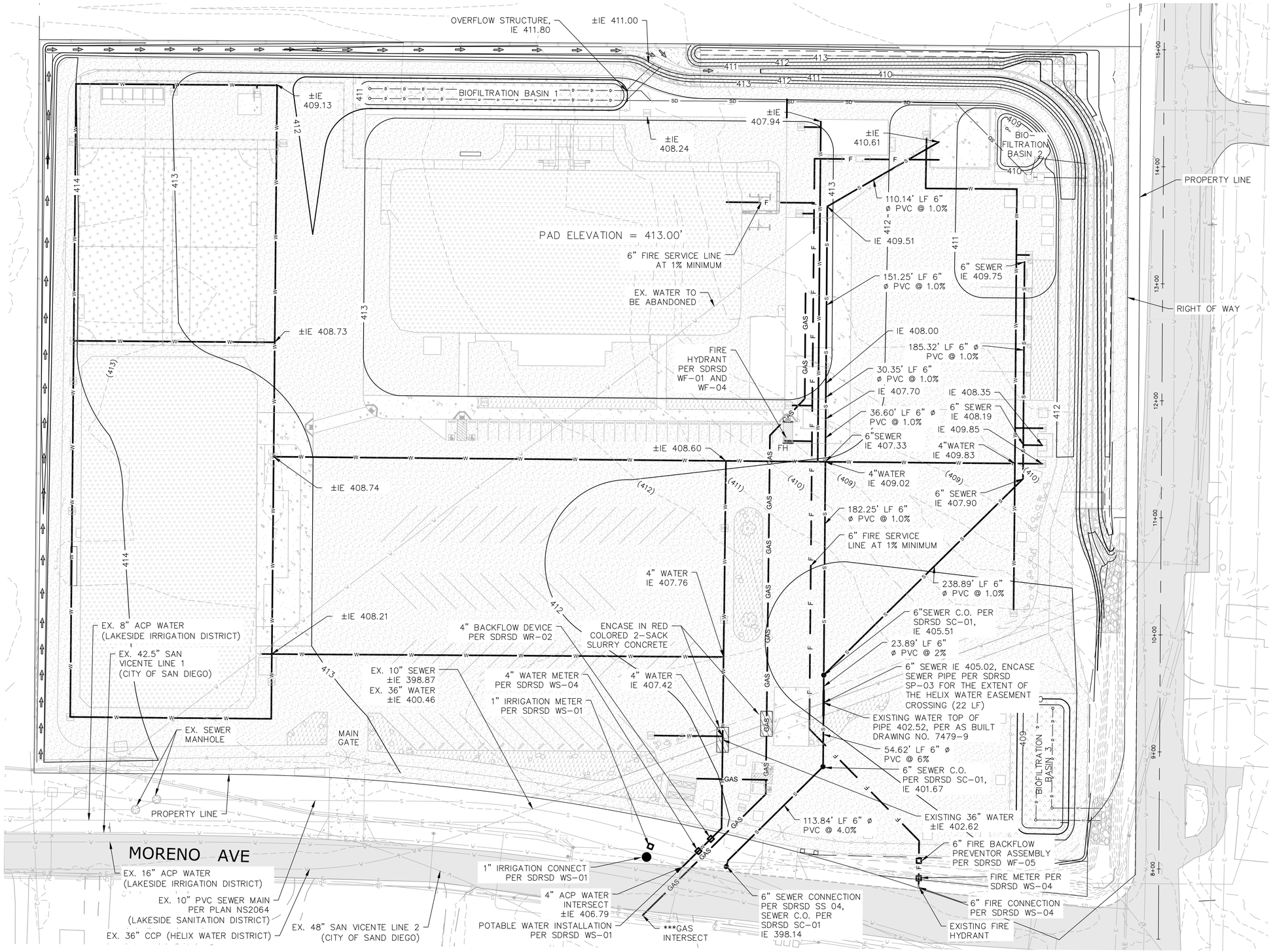

LEGEND:

- EXISTING MAJOR CONTOUR
- EXISTING MINOR CONTOUR
- 415 PROPOSED MAJOR CONTOUR
- 412 PROPOSED MINOR CONTOUR
- DECOMPOSED GRANITE (SEE DETAIL 6, SHEET 7)
- SLOPE PROTECTION/ RIP RAP OUTLET PROTECTION
- PROPOSED CONCRETE
- W PROPOSED 8" WATER LINE
- S PROPOSED 6" SEWER LINE
- F PROPOSED FIRE SERVICE LINE
- GAS PROPOSED GAS LINE

COMMERCIAL PRIVATE SEWER LATERAL CONSTRUCTION NOTES

1. THE CONTRACTOR SHALL COORDINATE CONNECTION TO SAN DIEGO COUNTY SANITATION DISTRICT (DISTRICT) AND LAKESIDE SERVICE AREA WITH THE COUNTY PARK PROJECT MANAGER. CONTRACTOR SHALL OBTAIN A COMMERCIAL WASTEWATER DISCHARGE PERMIT FROM THE DEPARTMENT OF PUBLIC WORKS. THE CONTRACTOR SHALL MAKE A WRITTEN APPLICATION TO WASTEWATER MANAGEMENT THROUGH DEPARTMENT OF PLANNING AND DEVELOPMENT SERVICES (DPDS), BUILDING PERMIT COUNTER. FOR INFORMATION, PHONE LOUIS CONDE OF WASTEWATER MANAGEMENT AT 858-694-2660.
2. THE CONNECTION (SADDLE ONLY) TO THE DISTRICT SEWER SHALL BE INSTALLED BY DISTRICT PERSONNEL ONLY AND MUST COORDINATE WITH THE COUNTY PARK PROJECT MANAGER. FOR FIELD COORDINATION, PHONE THE DISTRICT FIELD OFFICE FIVE (5) DAYS IN ADVANCE AT 619-496-7110 (TUE-FRI). ALL COST ASSOCIATED WITH PERMITS AND CONSTRUCTION OF SEWER LATERAL SHALL BE BORNE BY PROPERTY OWNER.
3. PROPOSED ONSITE PRIVATE SEWER LATERAL CONSTRUCTION SHALL BE PERMITTED AND INSPECTED BY THE COUNTY OF SAN DIEGO DEPARTMENT OF DEVELOPMENT SERVICES, BUILDING PERMIT DIVISION. THE CONTRACTOR SHALL COORDINATE PERMITS AND INSPECTION WITH THE COUNTY PARK PROJECT MANAGER.
4. SEWER LATERAL DOES NOT CONNECT WITH TRASH ENCLOSURE.

PDS BUILDING PERMIT NO.

U-1

REGISTERED PROFESSIONAL ENGINEER — DON BLOODWORTH — No. C 69554 — 12/31/2020 — CIVIL — STATE OF CALIFORNIA

KLEINFELDER — Bright People. Right Solutions.

REGISTERED ENGINEER DATE

DEPARTMENT OF PARKS AND RECREATION
COUNTY OF SAN DIEGO
5500 OVERLAND DRIVE, SUITE 410 SAN DIEGO, CALIFORNIA 92123

COUNTY OF SAN DIEGO PARKS AND RECREATION

NO.	REVISIONS	APPR.	DATE

DESIGNED BY: JAB
DRAWN BY: JM
CHECKED BY: RO
PROJECT MANAGER: DB

LAKESIDE EQUESTRIAN FACILITY
UTILITY DISTRIBUTION (WATER, SEWER, GAS)

SCALE: AS SHOWN
PROJ. NO. 1020367
FILE NO.
SHEET 16 OF 34

C:\pwworking\kleinfelderpwd1\jmanning@kleinfelder.com\d0192616\1020367-U1-UTILITIES PLAN_100%_rev2.dwg Friday, Feb. 07 2020 10:38am JManning

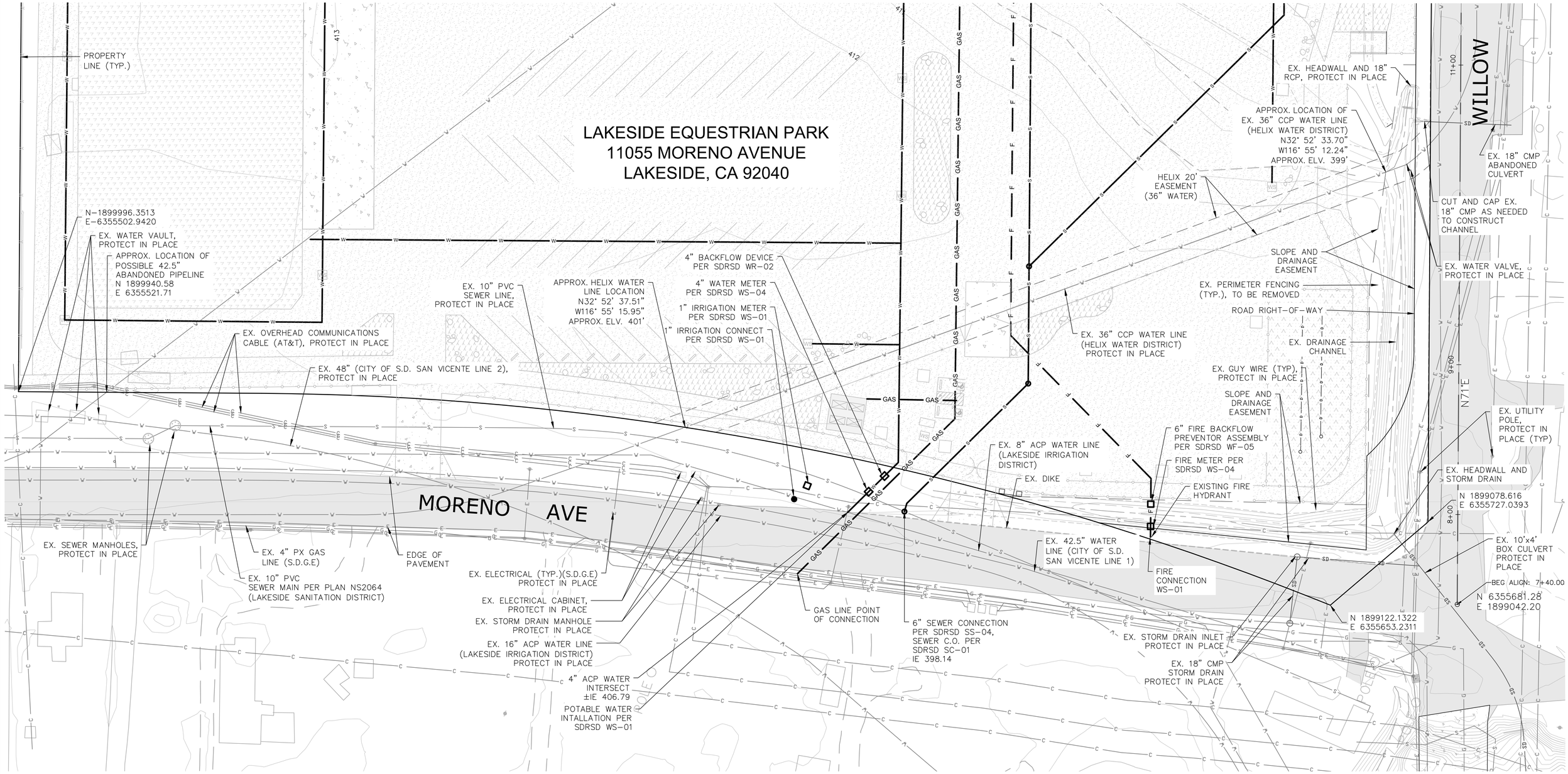

U-2

REGISTERED PROFESSIONAL ENGINEER
DON BLOODWORTH
No. C 60954
Exp. 12/31/2020
CIVIL
STATE OF CALIFORNIA

KLEINFELDER
Bright People. Right Solutions.

REGISTERED ENGINEER DATE

DEPARTMENT OF PARKS AND RECREATION
COUNTY OF SAN DIEGO
5500 OVERLAND DRIVE, SUITE 410 SAN DIEGO, CALIFORNIA 92123

COUNTY OF SAN DIEGO PARKS AND RECREATION

NO.	REVISIONS	APPR.	DATE

DESIGNED BY: JAB
DRAWN BY: JM
CHECKED BY: RO
PROJECT MANAGER: DB

LAKESIDE EQUESTRIAN FACILITY
POINT OF CONNECTION DETAILS

SCALE AS SHOWN
PROJ. NO. 1020367
FILE NO.
SHEET 17 OF 34

C:\pwworking\kleinfelderpw01\jmaninang@kleinfelder.com\d0192616\1020367-U2-POINT-OF-CONNECTIONS_100%.dwg Friday, Feb. 07 2020 10:54am JManinang

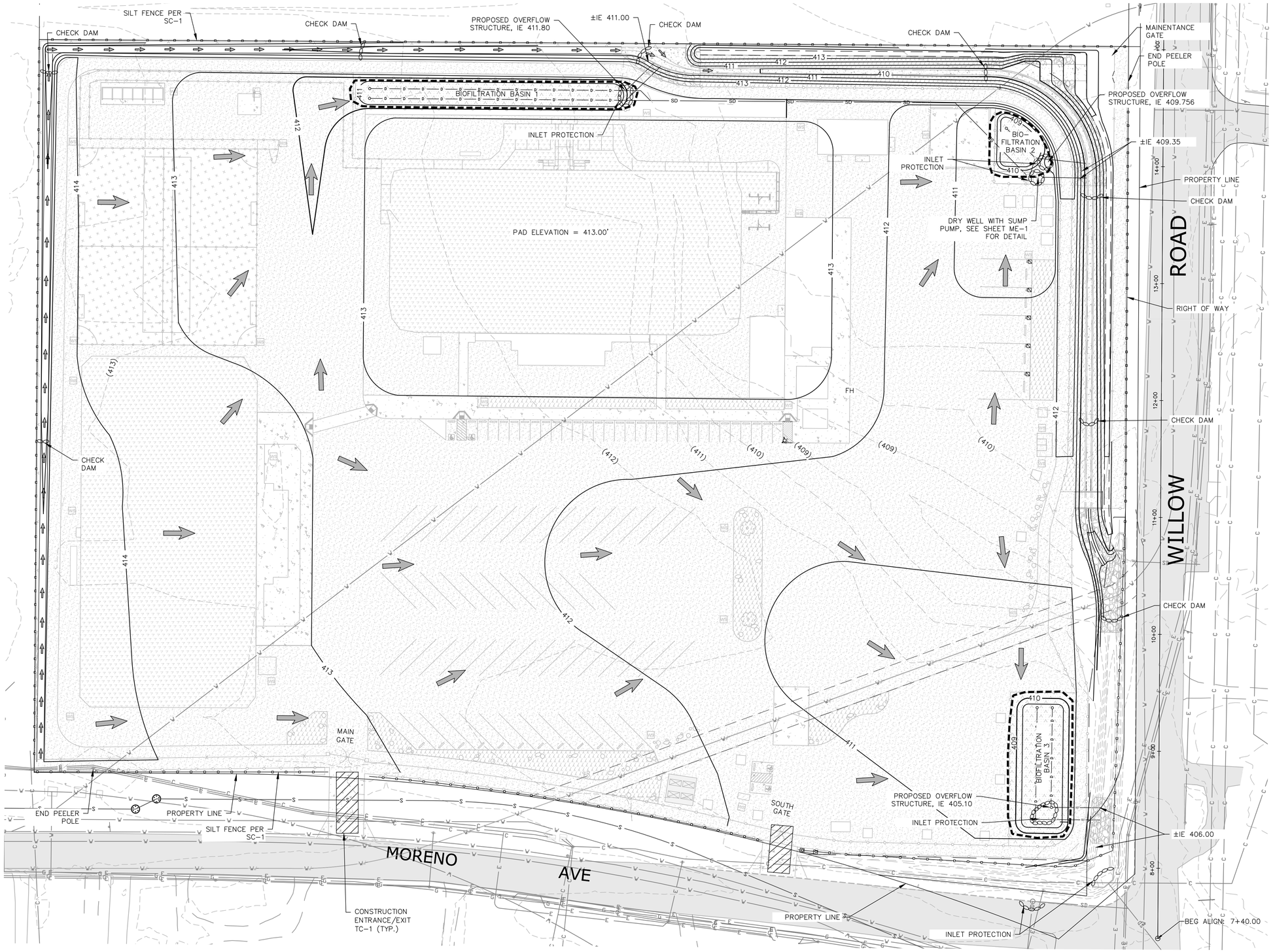

LEGEND:

- EXISTING MAJOR CONTOUR
- EXISTING MINOR CONTOUR
- PROPOSED MAJOR CONTOUR
- PROPOSED MINOR CONTOUR
- FLOW DIRECTION
- SLOPE PROTECTION/ RIP RAP OUTLET PROTECTION
- CHECK DAM OR INLET PROTECTION
- FIBER ROLLS SC-5
- SILT FENCE SC-1
- CONSTRUCTION ENTRANCE/EXIT TC-01

CALTRANS BMP

SS-01	SCHEDULING
SS-02	PRESERVATION OF EXISTING VEGETATION
SS-04	HYDROSEEEDING. SEE LP-1 & LP-2 FOR LOCATION AND SEED MIXTURE
SC-01	SILT FENCE
SC-04	CHECK DAMS
SC-05	FIBER ROLLS
SC-07	STREET SWEEPING AND VACUUMING
SC-10	STORM DRAIN INLET PROTECTION
WE-01	WIND EROSION
TC-01	STABILIZED CONSTRUCTION ENTRANCE/EXIT
NS-01	NON-STORM WATER MANAGEMENT
NS-03	PAVING AND GRINDING OPERATIONS
NS-08	VEHICLE AND MAINTENANCE CLEANING
NS-10	VEHICLE AND EQUIPMENT MAINTENANCE
WM-01	MATERIAL DELIVERY AND STORAGE
WM-02	MATERIAL USE
WM-03	STOCKPILE MANAGEMENT
WM-04	SPILL PREVENTION AND CONTROL
WM-05	SOLID WASTE MANAGEMENT
WM-08	CONCRETE WASTE MANAGEMENT
WM-09	SANITARY AND SEPTIC WASTE MANAGEMENT

0 40 80
SCALE: 1" = 40' SCALE IN FEET

EC-1

REGISTERED PROFESSIONAL ENGINEER
ROBERT MICHAEL OJEDA
No. C74661
Exp. 12/31/2019
CIVIL
STATE OF CALIFORNIA

KLEINFELDER
Bright People. Right Solutions.

REGISTERED ENGINEER DATE

DEPARTMENT OF PARKS AND RECREATION
COUNTY OF SAN DIEGO
5500 OVERLAND DRIVE, SUITE 410 SAN DIEGO, CALIFORNIA 92123

COUNTY OF SAN DIEGO PARKS AND RECREATION

NO.	REVISIONS	APPR.	DATE

DESIGNED BY: JAB
DRAWN BY: JM
CHECKED BY: RO
PROJECT MANAGER: DB

LAKESIDE EQUESTRIAN FACILITY
EROSION CONTROL PLAN

SCALE AS SHOWN
PROJ. NO. 1020367
FILE NO.
SHEET 18 OF 34

C:\pwworking\kleinfeldergwd\tjmainsmang@kleinfelder.com\d0150516\1020367-EROSION CONTROL PLAN_100%.dwg Friday, Feb. 07 2020 10:22am JMainsmang

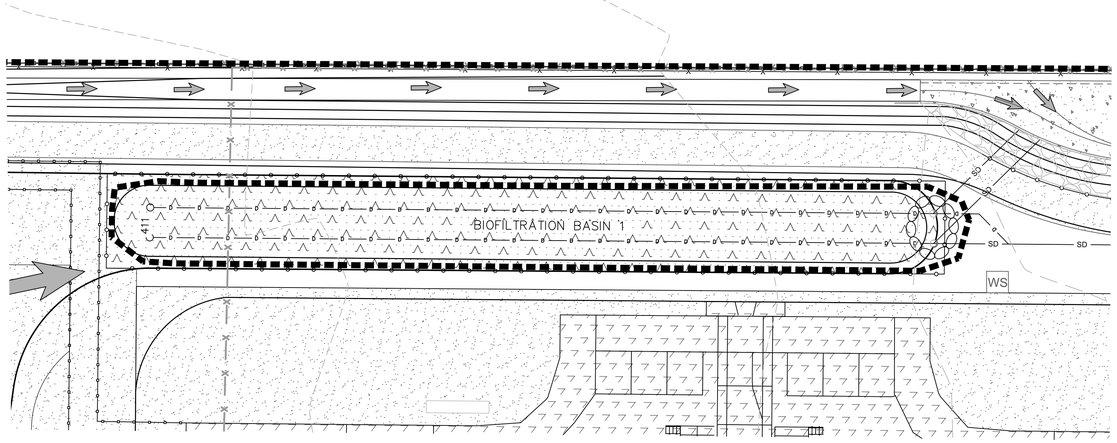

EROSION CONTROL PLAN
BIOFILTRATION BASIN #1

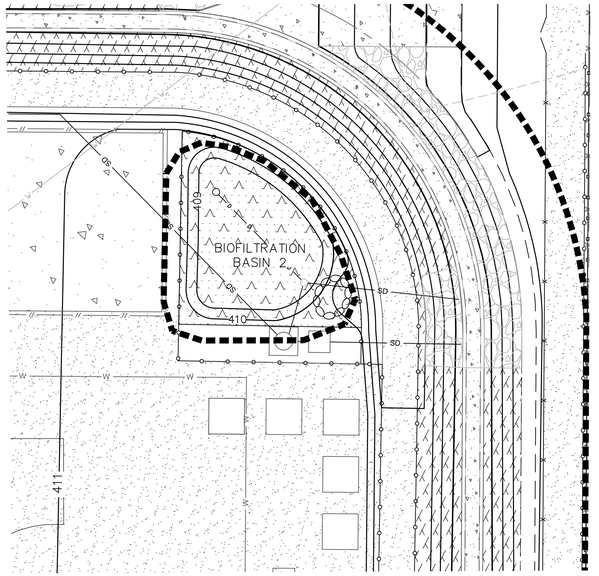

EROSION CONTROL PLAN
BIOFILTRATION BASIN #2

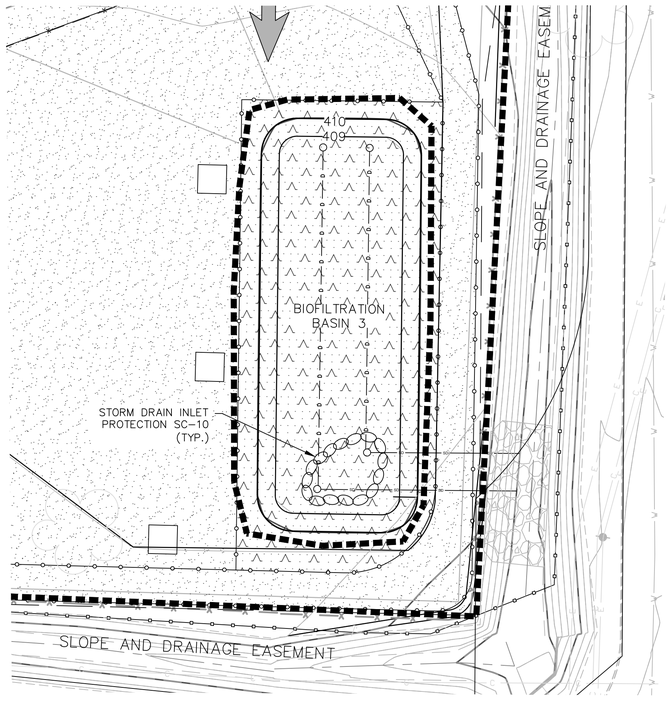

EROSION CONTROL PLAN
BIOFILTRATION BASIN #3

EROSION CONTROL LEGEND:

- FIBER ROLLS SC-5
- GRAVEL BAG BERM SC-6
- FLOW DIRECTION
- RIPRAP
- SILT FENCE SC-1

EROSION CONTROL NOTES

1. EQUIPMENT AND WORKERS FOR EMERGENCY WORK SHALL BE MADE AVAILABLE AT ALL TIMES DURING THE RAINY SEASON. ALL NECESSARY MATERIALS SHALL BE STOCKPILED ON SITE AT CONVENIENT LOCATIONS TO FACILITATE RAPID CONSTRUCTION OF TEMPORARY DEVICES WHEN RAIN IS EMINENT.
2. THE CONTRACTOR SHALL RESTORE ALL EROSION CONTROL DEVICES TO WORKING ORDER TO THE SATISFACTION OF THE COUNTY ENGINEER AFTER EACH RUN-OFF PRODUCING RAINFALL.
3. THE CONTRACTOR SHALL INSTALL ADDITIONAL EROSION CONTROL MEASURES AS MAY BE REQUIRED BY THE COUNTY ENGINEER DUE TO UNFORESEEN CIRCUMSTANCES WHICH MAY ARISE.
4. ALL REMOVABLE PROTECTIVE DEVICES SHOWN SHALL BE IN PLACE AT THE END OF EACH WORKING DAY. WHEN THE FIVE (5) DAY RAIN PROBABILITY FORECAST EXCEEDS FORTY PERCENT (40%), SILT AND OTHER DEBRIS SHALL BE REMOVED AFTER EACH RAINFALL.
5. ALL GRAVEL BAGS SHALL BE BURLAP TYPE WITH ¾ INCH MINIMUM AGGREGATE.

CALTRANS BMP's

SC-01 SILT FENCE
SC-05 FIBER ROLLS
SC-06 GRAVEL BAG BERM
TC-01 STABILIZED CONSTRUCTION ENTRANCE

EC-2

0 20 40
SCALE: 1" = 20' SCALE IN FEET

REGISTERED PROFESSIONAL ENGINEER
ROBERT MICHAEL OJEDA
No. C74061
Exp. 12/31/2019
CIVIL
STATE OF CALIFORNIA

KLEINFELDER
Bright People. Right Solutions.

REGISTERED ENGINEER DATE

DEPARTMENT OF PARKS AND RECREATION
COUNTY OF SAN DIEGO
5500 OVERLAND DRIVE, SUITE 410 SAN DIEGO, CALIFORNIA 92123

COUNTY OF SAN DIEGO PARKS AND RECREATION

NO.	REVISIONS	APPR.	DATE

DESIGNED BY: JAB
DRAWN BY: JM
CHECKED BY: RO
PROJECT MANAGER: DB

LAKESIDE EQUESTRIAN FACILITY
EROSION CONTROL DETAILS

SCALE: AS SHOWN
PROJ. NO.: 1020367
FILE NO.:
SHEET 19 OF 34

C:\pwworking\kleinfelderpw01\jmanning@kleinfelder.com\d01926161\1020367-Erosion Control Details_100%.dwg Friday, Feb. 07 2020 10:22am JManning

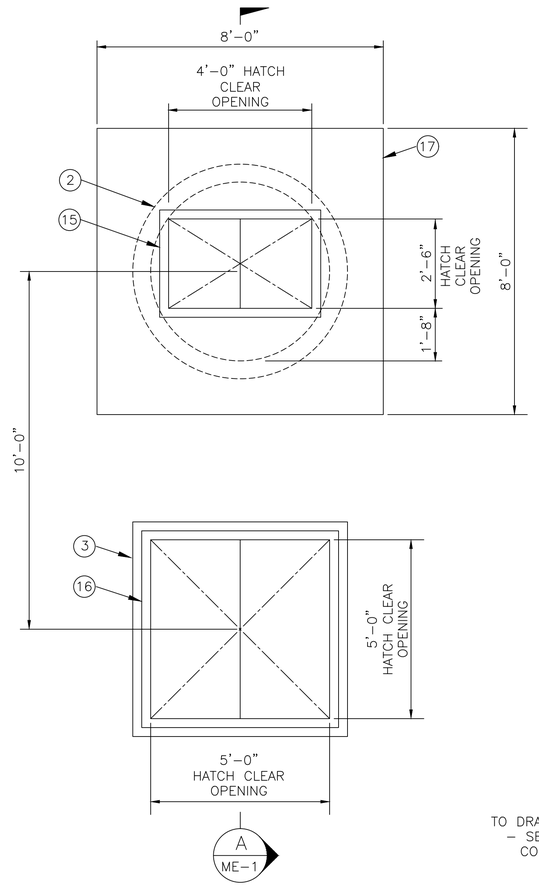

TOP PLAN

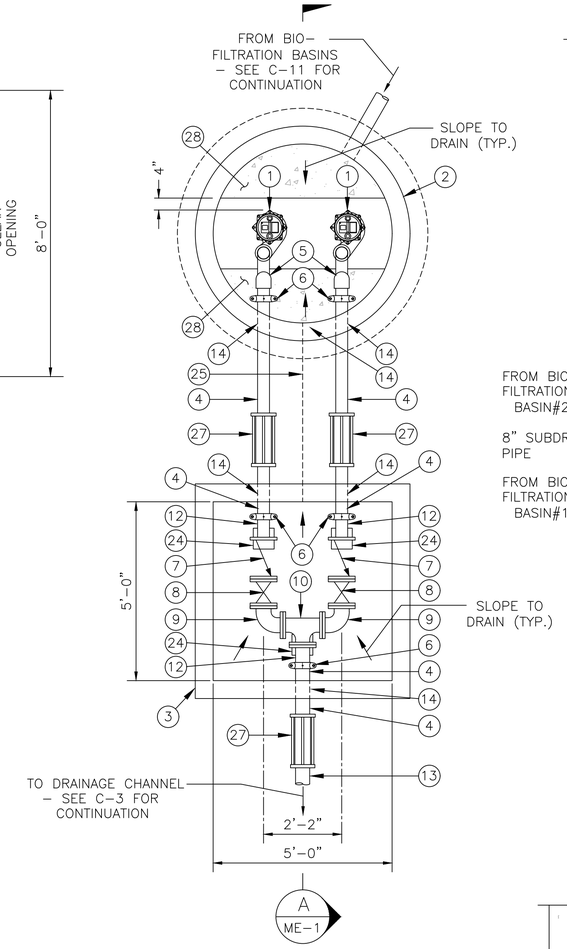

PIPING PLAN

SUBDRAIN PUMP STATION PLAN

SCALE: 1/2" = 1'-0"

1 C-3

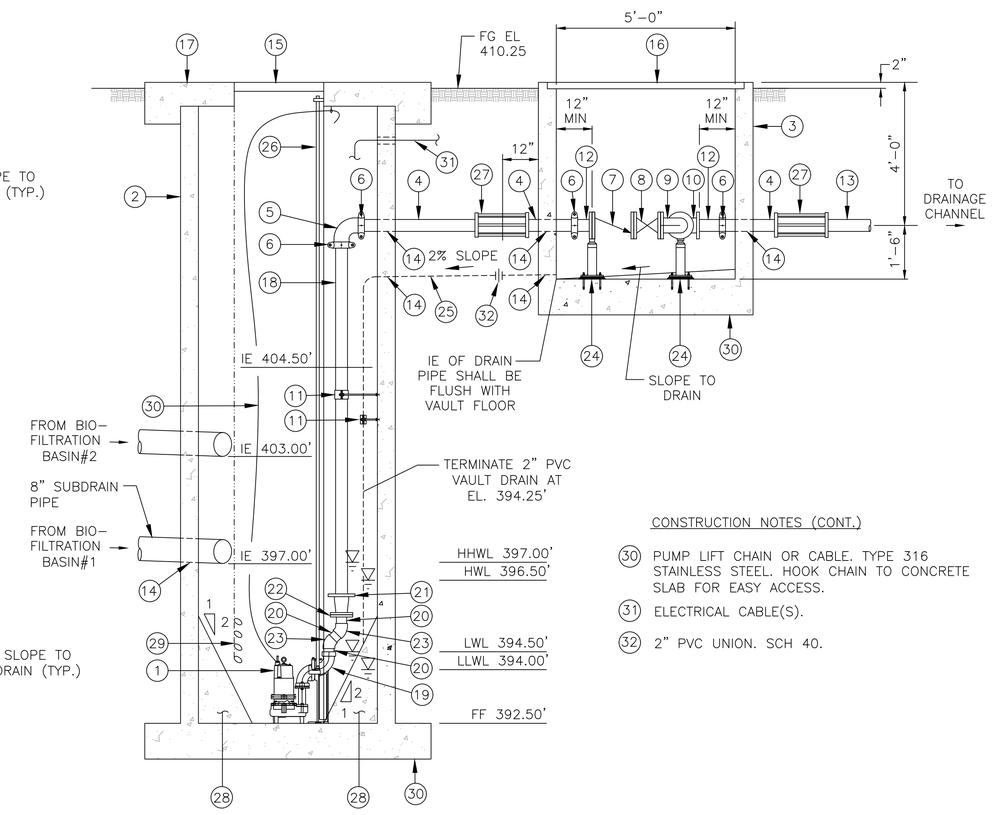

SUBDRAIN PUMP STATION SECTION

SCALE: 1/2" = 1'-0"

– –

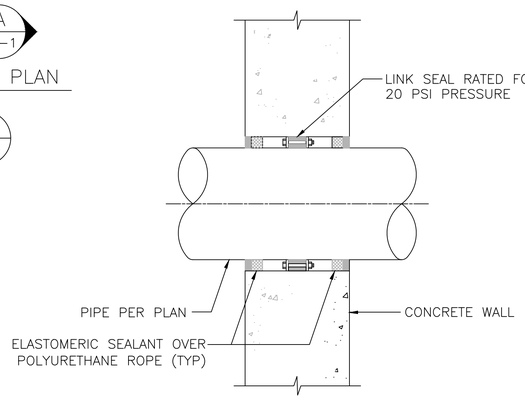

PIPE PENETRATION DETAIL

SCALE: 1/2" = 1'-0"

2 ME-1

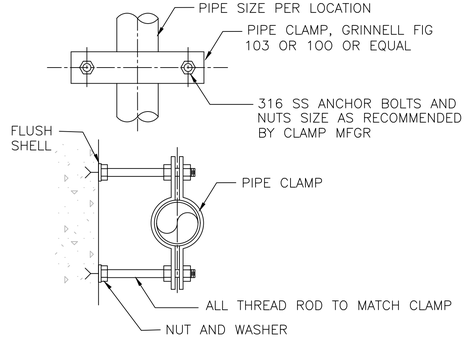

PIPE SUPPORT DETAIL

SCALE: 1/2" = 1'-0"

3 ME-1

NOTES:

1. THE INSIDE OF THE WET WELL IS CLASSIFIED AS A DIVISION 2 PER NFPA 820. ALL EQUIPMENT AND ELECTRICAL CONNECTIONS IN THE WET WELL SHALL BE EXPLOSION PROOF AND IN COMPLIANCE WITH NFPA 820.
2. PROPOSED SUMP PUMP PLAN AND DETAILS MUST BE REVIEWED AND APPROVED BY COUNTY OF SAN DIEGO DEPARTMENT OF DEVELOPMENT SERVICES, BUILDING PERMIT DIVISION. CONTRACTOR SHALL COORDINATE REVIEWS AND APPROVALS WITH THE COUNTY PARK PROJECT MANAGER.

NOTES:

1. CLAMPS SHALL NOT SUPPORT VERTICAL LOADS.
2. ALL CLAMPS SHALL BE 316 STAINLESS STEEL.

CONSTRUCTION NOTES (CONT.)

(30) PUMP LIFT CHAIN OR CABLE. TYPE 316 STAINLESS STEEL. HOOK CHAIN TO CONCRETE SLAB FOR EASY ACCESS.

(31) ELECTRICAL CABLE(S).

(32) 2" PVC UNION. SCH 40.

CONSTRUCTION NOTES

(1) SUBMERSIBLE PUMP. MYERS WHR SERIES, OR EQUAL. DESIGN POINT: 150 GPM AT 17' TDH.

(2) 5' ID PRECAST CONCRETE MANHOLE (WET WELL).

(3) PRECAST CONCRETE VAULT.

(4) 4" DI PIPE. GE X PE.

(5) 4" DI 90° ELBOW. GE X GE.

(6) FLEXIBLE GROOVED COUPLING. VICTAULIC STYLE 31, OR EQUAL.

(7) 4" RUBBER FLAPPER CHECK VALVE. APCO CRF 100, OR EQUAL.

(8) 4" RESILIENT WEDGE GATE VALVE, AWWA C509 WITH NUT OPERATOR.

(9) 4" DI 90° ELBOW. FLG X FLG.

(10) 4" DI TEE, FLG X FLG.

(11) INSTALL PIPE SUPPORT PER DETAIL 3, ME-1 AT MID-SPAN OF EACH PIPE.

(12) 4" DI PIPE. FLG X GE.

(13) 4" DI PIPE. GE X MJ.

(14) PIPE PENETRATION PER DETAIL 2, ME-1.

(15) 48" x 30" ALUMINUM, SPRING LOADED, DOUBLE-LEAF ACCESS HATCH WITH STAINLESS STEEL HARDWARE. 300 PSF LIVE LOAD DESIGN. BILCO JD-1AL, OR EQUAL.

(16) 60" x 60" ALUMINUM, SPRING LOADED, DOUBLE-LEAF ACCESS HATCH WITH STAINLESS STEEL HARDWARE. 300 PSF LIVE LOAD DESIGN. BILCO JD-4AL, OR EQUAL.

(17) PRECAST CONCRETE SLAB.

(18) 4" DI PIPE. GE X FLG.

(19) 3" DI PUMP DISCHARGE ELBOW, WITH LIFT-OUT FLANGE, ALL FASTENERS SHALL BE STAINLESS STEEL.

(20) 3" DI THREADED NIPPLE.

(21) 4" TO 3" DI REDUCER. FLG X FLG.

(22) 3" DI FLANGE ADAPTER. MALE NPT X FLG.

(23) 3" DI 45° BEND. THREADED, FEMALE NPT.

(24) 2" DIAMETER ADJUSTABLE GALVANIZED STEEL PIPE SUPPORT WITH SADDLE AND BASE PLATE. BASE PLATE SHALL BE ANCHORED WITH (4) 5/8" DIA STAINLESS STEEL ADHESIVE ANCHORS WITH 3" EMBEDMENT TO THE VAULT FLOOR, APPLY 1" THICK LEVELING GROUT BETWEEN BASE PLATE AND VAULT FLOOR.

(25) 2" VAULT DRAIN PIPE. SCH 40 PVC.

(26) 1" GUIDE RAILS. PROVIDE GUIDE SUPPORTS AT A MAXIMUM SPACING OF 10 FEET. GUIDE RAILS, SUPPORTS AND OTHER HARDWARE SHALL BE OF TYPE 316 STAINLESS STEEL.

(27) RESTRAINED FLEXIBLE COUPLING FOR DI PIPE. SMITH-BLAIR STYLE 471, OR EQUAL. AFTER INSTALLATION, COUPLING SHALL BE WRAPPED WITH 8-MIL POLYETHYLENE WRAP PER AWWA C-105.

(28) PROVIDE CONCRETE FILL.

(29) FLOAT SYSTEM ASSEMBLY.

(30) SUBGRADE SHALL BE PREPARED AS RECOMMENDED IN THE GEOTECHNICAL REPORT.

PDS BUILDING PERMIT NO. _____

ME-1

REGISTERED PROFESSIONAL ENGINEER
ARTURO E GARCIA
No. C 82672
Exp. 06/30/2020
CIVIL
STATE OF CALIFORNIA

KLEINFELDER
Bright People. Right Solutions.

REGISTERED ENGINEER DATE

DEPARTMENT OF PARKS AND RECREATION
COUNTY OF SAN DIEGO
5500 OVERLAND DRIVE, SUITE 410 SAN DIEGO, CALIFORNIA 92123

COUNTY OF SAN DIEGO PARKS AND RECREATION

NO.	REVISIONS	APPR.	DATE

DESIGNED BY: JAB
DRAWN BY: JM
CHECKED BY: RO
PROJECT MANAGER: DB

LAKESIDE EQUESTRIAN FACILITY
SUMP PUMP PLAN & DETAILS

SCALE: AS SHOWN
PROJ. NO. 1020367
FILE NO.
SHEET 20 OF 34

C:\pwworking\kleinfelderpwv01\jmanning\@kleinfelder.com\D1920161\1020367-Details Sump Pump_100%.dwg Friday, Feb. 07 2020 10:23am JManning

GENERAL NOTES

1. ELECTRICAL INSTALLATION, MATERIALS, AND METHODS SHALL COMPLY WITH ALL APPLICABLE BUILDING CODES INCLUDING THE 2019 CALIFORNIA ELECTRICAL CODE (2017 NEC).
2. WIRING METHODS ARE INSULATED COPPER CONDUCTORS INSTALLED IN CONDUIT.
3. CONDUCTORS ARE COPPER WITH 90 DEGREE C THHN/THWN INSULATION
4. CIRCUIT BREAKERS SHALL BE FULLY RATED TO MEET OR EXCEED THE AIC RATINGS INDICATED.
5. MOTOR STARTERS AND FUSED SAFETY SWITCHES SHALL BE RATED FOR THE LOAD BEING SERVED. PROVIDE FUSE TYPE AND SIZE PER EQUIPMENT MANUFACTURER. CONTRACTOR SHALL VERIFY EQUIPMENT BRANCH CIRCUIT AND FUSE WIRING REQUIREMENTS PRIOR TO ROUGH-IN.
6. ALL PENETRATIONS THROUGH FIRE RATED WALLS SHALL BE PROTECTED FROM THE SPREAD OF FIRE WITH AN APPROVED FIRESTOP SYSTEM EQUAL OR GREATER THAN THE FIRE RATING OF THE WALL.
7. CONTRACTOR SHALL VERIFY ALL LOCATIONS, CONDITIONS, AND OBSTRUCTIONS PRIOR TO START OF CONSTRUCTION.
8. ELECTRICAL DRAWINGS ARE DIAGRAMMATIC AND ARE NOT INTENDED TO IDENTIFY THE EXACT PLACEMENT OF THE LIGHT FIXTURES AND OUTLETS. EXACT LOCATIONS OF ALL DEVICES INCLUDING MOUNTING HEIGHTS SHALL BE COORDINATED WITH ARCHITECTURAL DRAWINGS AND OWNER DURING CONSTRUCTION.
9. PROVIDE QUANTITY OF WIRES REQUIRED IN EACH WIRING SEGMENT FOR THE BRANCH CIRCUIT HOMERUNS AND INTERCONNECTING WIRING TO OUTLETS SHOWN ON DRAWINGS. COMMON NEUTRAL IS PERMITTED ONLY IN CASES ALLOWED BY CODE UNLESS NOTED OTHERWISE. PROVIDE BRANCH CIRCUIT WIRING AND CONDUIT SIZED PER CODE FOR ALL REQUIRED ELECTRICAL DEVICES AND EQUIPMENT SHOWN ON THE DRAWINGS. SIZE USE #12 AWG MINIMUM WIRE SIZE.
10. ALL POWER RECEPTACLES SHALL BE 20 AMP MINIMUM. DO NOT USE 15 AMP RECEPTACLE.
11. THE CONTRACTOR SHALL REFER TO COUNTY CONSTRUCTION STANDARDS. ALL WORK AND INSTALLED MATERIALS SHALL COMPLY WITH COUNTY CONSTRUCTION STANDARDS UNLESS SPECIFICALLY NOTED OTHERWISE.
12. THE CONTRACTOR SHALL REVIEW ALL DRAWINGS WITHIN THIS SET INCLUDING CIVIL, STRUCTURAL, ARCHITECTURAL, MECHANICAL, AND PLUMBING. SPECIFICATIONS FOR ELECTRICAL WORK NOTED ON OTHER DRAWINGS SHALL APPLY TO THE ELECTRICAL WORK
13. PROVIDE GREEN INSULATED EQUIPMENT GROUND CONDUCTOR IN ALL BRANCH CIRCUIT AND FEEDER RACEWAY. CONDUCTOR SHALL BE SIZE PER CEC ARTICLE 250.
14. IN CASES WHERE THERE ARE CONFLICTS BETWEEN THE DRAWINGS, SPECIFICATIONS, AND THE COUNTY STANDARDS, THE CONTRACTOR SHALL INCLUDE IN THE BID PRICE THE MOST RESTRICTIVE AND HIGHEST COST ALTERNATIVE. THE CONTRACTOR SHALL PREPARE AND SUBMIT TO THE COUNTY A REQUEST FOR INFORMATION (RFI) ASKING FOR CLARIFICATION OF THE CONFLICTING SPECIFICATION.
15. 2019 CALIFORNIA ENERGY CODE STANDARDS ARE APPLICABLE TO THIS PROJECT. THE REQUIREMENTS FOR INSTALLATION, TESTING, COMMISSIONING, AND FINAL VERIFICATION OF COMPLIANCE FOR LIGHTING AND CONTROL SYSTEMS ARE RESPONSIBILITY OF THE CONTRACTOR. THE CONTRACTOR IS RESPONSIBLE FOR ALL FIELD COMPLIANCE DOCUMENTATION, TESTING, AND COMMISSIONING TO MEET THE SATISFACTION OF THE INSPECTION AUTHORITY.
16. THE CONTRACTOR IS RESPONSIBLE FOR RECONCILIATION OF ALL SUBCONTRACTOR AND VENDOR EXCLUSIONS DURING BID SUCH THAT NO EXCLUSION OF MATERIALS OR LABOR BY ANY SUBCONTRACTOR OR VENDOR SHALL BE APPLICABLE TO THE CONTRACTOR'S BID FOR THE PROJECT UNLESS SUCH EXCLUSIONS ARE SPECIFICALLY ADDRESSED DURING BID AND ACCEPTED BY THE COUNTY.
17. THE ELECTRICAL SCOPE OF WORK APPLICABLE TO EACH SEPARATE BID ITEM AND EACH SEPARATE BUILDING STRUCTURE, ESPECIALLY IN THE CASE OF PRE-ENGINEERED OR PRE-PACKAGED BUILDINGS, SHALL BE COORDINATED AND CLEARLY DEFINED AS APPLICABLE.
18. BUILDING ELECTRICAL DRAWINGS SHOW ELECTRICAL OUTLETS, SWITCHES, LIGHTING, AND OTHER DEVICES AND EQUIPMENT FOR WHICH BRANCH CIRCUIT CONDUIT AND WIRE ARE REQUIRED. PROVIDE CONDUIT AND WIRE PER ELECTRICAL CODE TO SUPPLY AND CONTROL ALL SUCH ITEMS. EXACT ROUTING OF CONDUIT SHALL BE COORDINATED AND DETERMINED IN THE FIELD BY CONTRACTOR.
19. BUILDINGS ELECTRICAL INSTALLATION ONLY: ELECTRICAL METALLIC TUBING CONDUIT WITH COMPRESSION COUPLINGS AND CONNECTORS SHALL BE ACCEPTABLE FOR CONDUIT CONCEALED IN WALLS OR ABOVE CEILING WHERE NOT SUBJECT TO DAMAGE. EXPOSED CONDUIT INSTALLED BELOW 36" SHALL BE GALVANIZED RIGID STEEL PER SPECIFICATIONS.

ABBREVIATIONS

A	AMPERES
AC	ALTERNATING CURRENT
AF	AMPERE FRAME
AFC	ABOVE FINISHED CONCRETE
AFF	ABOVE FINISHED FLOOR
AFG	ABOVE FINISHED GRADE
AT	AMPERE TRIP
ATS	AUTOMATIC TRANSFER SWITCH
AUX	AUXILIARY
AUTO	AUTOMATIC
AWG	AMERICAN WIRE GAUGE
BC	BARE COPPER
BD	BOARD
BKR	BREAKER
C	CONDUIT
CB	CIRCUIT BREAKER
CKT	CIRCUIT
CLG	CEILING
C.O.	CONDUIT ONLY
COND	CONDUCTOR
CONT	CONTROL
CT	CURRENT TRANSFORMER
CU	COPPER
CR	CONTROL RELAY
DC	DIRECT CURRENT
DISC	DISCONNECT
DISC SW	DISCONNECT SWITCH
DPDT	DOUBLE POLE DOUBLE THROW
DPST	DOUBLE POLE SINGLE THROW
DWG	DRAWING
DS	DOOR SWITCH
EL,ELEV	ELEVATION
EMT	ELECTRICAL METALLIC TUBING
EO	ELECTRICALLY OPERATED
EXIST	EXISTING
FBO	FURNISHED BY OWNER
FDR	FEEDER
FIN	FINISHED
FLA	FULL LOAD AMPS
FLEX	FLEXIBLE
FM	FLOW METER
FS	FLOW SWITCH
FT OR '	FEET OR FOOT
FT	FLOW TRANSMITTER
FVNR	FULL VOLTAGE NON REVERSING
GALV	GALVANIZED
GD	GAS DETECTORS
GFI	GROUND FAULT INTERRUPTER
GFP	GROUND FAULT PROTECTION
GND OR G	GROUND
HH	HANDHOLE
HOA	HAND/OFF/AUTO
HTR	HEATER
IC	INTERRUPTING CURRENT
IN OR "	INCHES OR INCH
IND	INDICATING
INST	INSTANTANEOUS
INSTR	INSTRUMENT
INTLK	INTERLOCK
KW	KILOWATTS
LCL	LONG CONTINUOUS LOAD
LCP	LOCAL CONTROL PANEL
LEV	LEVEL
LIM	LIMIT
LR	LOCAL/REMOTE
LOS	LOCKOUT STOP STATION
LS	LEVEL OR LIMIT SWITCH
LSIG	LONG TIME, SHORT TIME, INSTANTANEOUS AND GROUND FAULT ADJUSTMENTS
LT	LIGHT
LTG	LIGHTING
LV	LOW VOLTAGE
MA	MILLIAMPERE
MAINT	MAINTAINED
MAN	MANUAL
MAX	MAXIMUM
MC	MAINTAINED CONTACT
MCC	MOTOR CONTROL CENTER
MCM	THOUSAND CIRCULAR MILS
MCP	MOTOR CIRCUIT PROTECTOR
MH	MANHOLE
MIN	MINIMUM OR MINUTE
MLO	MAIN LUGS ONLY
MSB	MAIN SWITCHBOARD
MTG	MOUNTING
MTR	MOTOR
N	NEUTRAL
NA	NON-AUTOMATIC
NC	NORMALLY CLOSED
NEC	NATIONAL ELECTRIC CODE
NIC	NOT IN CONTRACT
No	NUMBER
NO	NORMALLY OPEN
NOIC	NORMALLY OPEN, INSTANTANEOUS CLOSE
NOTC	NORMALLY OPEN, TIME CLOSE
NOTO	NORMALLY OPEN, TIME OPEN
NP	NAMEPLATE
NTS	NOT TO SCALE
OL	OVERLOAD
OTT	OVERTEMP SWITCH
PB	PUSHBUTTON
PB	PULLBOX
PC	PHOTOCELL
PCV	PUMP CONTROL VALVE
PMR	POWER MONITOR RELAY
PNL	PANEL
POS	POSITION
PR	PAIR
PRI	PRIMARY
PS	PRESSURE SWITCH
PT	POTENTIAL TRANSFORMER
PVC	POLYVINYL CHLORIDE
PVC/RGS	PVC JACKETED RIGID GALVANIZED STEEL CONDUIT
PW	PART WINDING
RECEP	RECEPTACLE
RCP	REMOTE CONTROL PANEL
RGS	RIGID GALVANIZED STEEL CONDUIT
RTU	REMOTE TERMINAL UNIT
RVAT	REDUCED VOLTAGE AUTO TRANSFORMER
RVYD	REDUCED VOLTAGE WYE DELTA
SCE	SOUTHERN CALIFORNIA EDISON
SEC	SECONDARY
SEL	SELECTOR
SP	SPARE
SPEC	SPECIFICATION
SPDT	SINGLE POLE DOUBLE THROW
SPST	SINGLE POLE SINGLE THROW
SS	STAINLESS STEEL
SSRV	SOLID STATE REDUCED VOLTAGE STARTER
ST	SHUNT TRIP
STA	STATION
STL	STEEL
STP	SHIELDED TWISTED PAIR
STR	STARTER
STT	SHIELDED TWISTED TRIPLET
SV	SOLENOID VALVE
SW	SWITCH
SWBD	SWITCHBOARD
TB	TERMINAL BOX
TEL	TELEPHONE
TEMP	TEMPERATURE
TERM	TERMINAL
TYP	TYPICAL
UG	UNDERGROUND
UON	UNLESS OTHERWISE NOTED
V	VOLTS
W	WATTS
WP	WEATHERPROOF
XFMR	TRANSFORMER
XP	EXPLOSION PROOF
3W	THREE WIRE
4W	FOUR WIRE

ELECTRICAL SYMBOLS LIST

SYMBOL	DESCRIPTION
$	LIGHT SWITCH, 20A, 120V, SURFACE OR WALL MOUNTED +48"AFF
$D	ELECTRONIC DIMMER SWITCH, RATED FOR CONNECTED LOAD, SURFACE OR WALL MOUNTED +48" AFF
$OS	OCCUPANCY SENSOR, INFRARED TYPE, SURFACE OR WALL MOUNTED +48" AFF
	SIGN FLOODLIGHT
OS	OCCUPANCY SENSOR, ULTRASONIC TYPE WITH LOAD RELAY AS APPLICABLE. CEILING MOUNTED.
	POLE LIGHT FIXTURE, TYPE AS SPECIFIED
	CEILING SURFACE OR PENDANT LINEAR LIGHT FIXTURE, TYPE AS SPECIFIED
	LIGHT FIXTURE WITH 90 MINUTE BATTERY BACKUP RATED FOR EMERGENCY USE.
	RECESSED 2 X 4 LIGHT FIXTURE, TYPE AS SPECIFIED
	EXTERIOR WALL MOUNTED LIGHT FIXTURE, TYPE AS SPECIFIED
	EXTERIOR WALL PACK LIGHT FIXTURE, TYPE AS SPECIFIED
	CEILING SURFACE OR PENDANT LINEAR LIGHT FIXTURE, TYPE AS SPECIFIED
A	LIGHT FIXTURE TYPE DESIGNATOR
1	REFERENCE NOTE DESIGNATOR
	DUPLEX RECEPTACLE, 20A, 120V, WALL OR SURFACE MOUNTED +18" AFF
GFI WP	DUPLEX RECEPTACLE, 20A, 120V, WALL OR CONDUIT MOUNTED +18" AFF IN-USE WEATHERPROOF COVER AND GROUND FAULT INTERRUPTER
	SINGLE RECEPTACLE, TYPE AND RATING AS DESIGNATED ON PLAN OR SCHEDULE, WALL OR SURFACE MOUNTED + 18" AFF
J	JUNCTION BOX
J	JUNCTION BOX WITH FLEXIBLE CONDUIT CONNECTION TO EQUIPMENT
	POWER PANELBOARD
	CONTROL STATION OR CONTROL PANEL
	CONDUIT MOUNTED ABOVE GRADE CONCEALED OR EXPOSED ON WALL OR CEILING. CONDUIT AND CIRCUIT WIRING SIZES AS REQUIRED FOR RESPECTIVE CIRCUIT OR AS NOTED. MINIMUM CONDUIT SIZE 1/2", MINIMUM WIRE SIZE #12AWG.
	CONDUIT INSTALLED UNDERGROUND. CONDUIT AND CIRCUIT WIRING SIZES AS REQUIRED FOR RESPECTIVE CIRCUIT OR AS NOTED. MINIMUM CONDUIT SIZE 1", MINIMUM WIRE SIZE #10AWG.
A-2 #10	HOMERUN CONDUIT. "A-2" INDICATES PANEL AND CIRCUIT NUMBER. "#10" INDICATES WIRE SIZE FOR HOMERUN WIRE AND ALL DOWNSTREAM WIRES FOR THE ENTIRE BRANCH CIRCUIT.
	MOTOR
F	FUSIBLE DISCONNECT SWITCH
M	UTILITY METER
	CONDUIT STUB
	FUSED SWITCH
	CIRCUIT BREAKER

E-1

REGISTERED PROFESSIONAL ENGINEER
GERALD L. GREEN
No. E15691
Exp. 6/30/20
ELECTRICAL
STATE OF CALIFORNIA

MORAES / PHAM & ASSOCIATES
2131 Palomar Airport Rd. #120
Carlsbad, CA 92011

REGISTERED ENGINEER DATE

DEPARTMENT OF PARKS AND RECREATION
COUNTY OF SAN DIEGO
5500 OVERLAND DRIVE, SUITE 410 SAN DIEGO, CALIFORNIA 92123

COUNTY OF SAN DIEGO PARKS AND RECREATION

NO.	REVISIONS	APPR.	DATE

DESIGNED BY: GG
DRAWN BY: CADD
CHECKED BY: GG
PROJECT MANAGER: XX

LAKESIDE EQUESTRIAN FACILITY

STANDARD ELECTRICAL SYMBOLS AND ABBREVIATIONS

SCALE AS SHOWN
PROJ. NO. 1020367
FILE NO.
SHEET 21 OF 34

Z:\Lakeside Equestrian Facility\ELECTRICAL\E-1.dwg Wednesday, Feb. 05 2020 12:59pm gerry

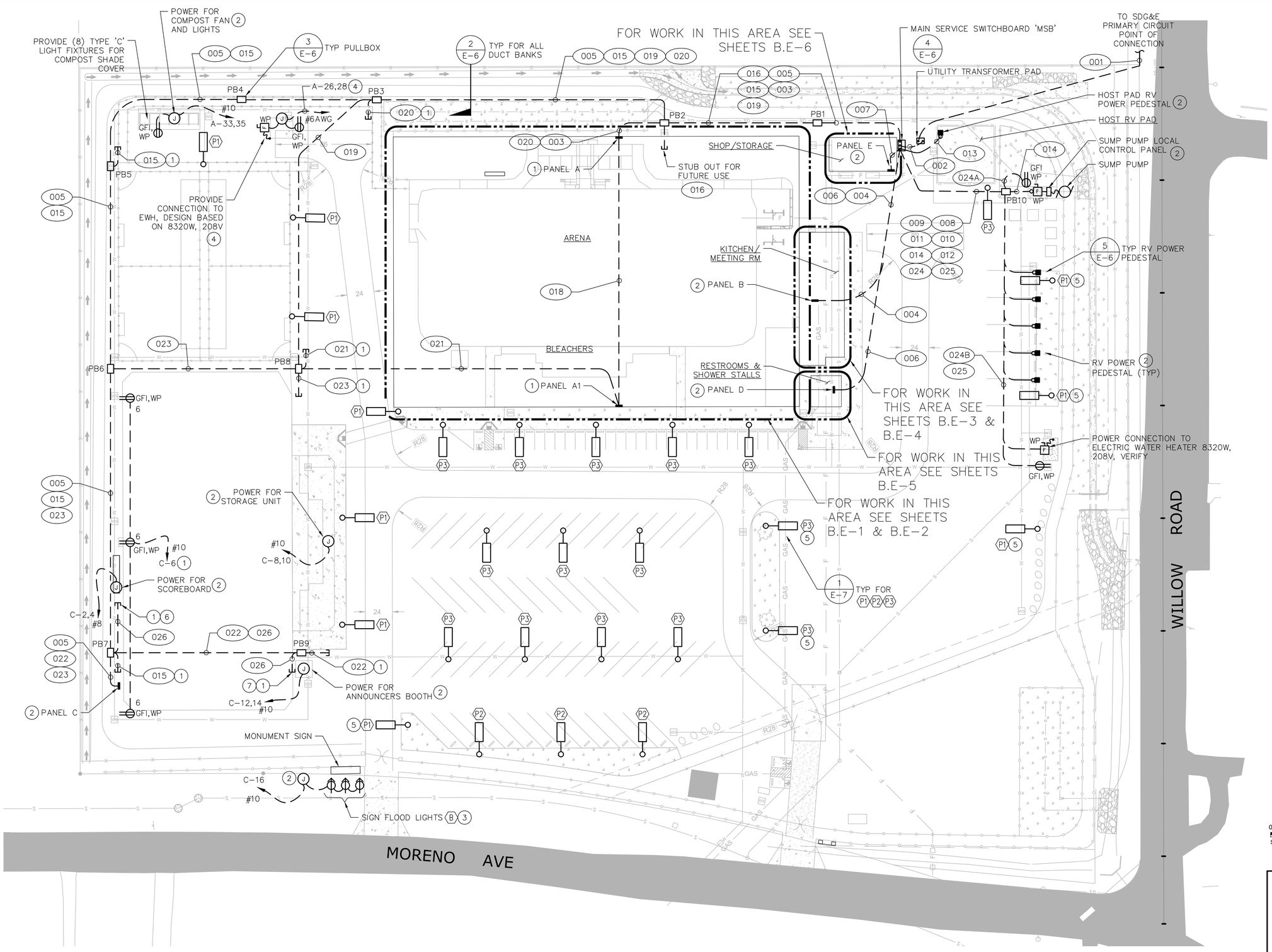

NOTES:

1. STUB OUT AND CAP FOR FUTURE USE, VERIFY EXACT LOCATION.
2. VERIFY EXACT LOCATION FOR CONDUIT STUB UP AND POWER CONNECTION J-BOX OR POWER PANEL.
3. VERIFY SPACING REQUIREMENTS FOR EVEN LIGHTING OF SIGN.
4. VERIFY RATING OF FUSIBLE DISCONNECT AND CIRCUIT REQUIREMENTS FOR ELECTRIC WATER HEATER.
5. COORDINATE LOCATION OF SOLAR LIGHT POLE WITH TREE SUCH THAT LIGHT FIXTURE WILL ILLUMINATE GRADE FORWARD OF POLE AND SOLAR ARRAY FACING SOUTH WILL NOT BE OBSTRUCTED FROM DIRECT SUNLIGHT EXPOSURE.
6. STUB UP CONDUIT AT SCOREBOARD.
7. STUB UP CONDUIT AT ANNOUNCERS BOOTH.

E-2

REGISTERED PROFESSIONAL ENGINEER — GERALD GREEN — No. E15691 — Exp. 6/30/20 — ELECTRICAL — STATE OF CALIFORNIA

REGISTERED ENGINEER DATE

MPA
MORAES / PHAM & ASSOCIATES
2131 Palomar Airport Rd. #120
Carlsbad, CA 92011

DEPARTMENT OF PARKS AND RECREATION
COUNTY OF SAN DIEGO
5500 OVERLAND DRIVE, SUITE 410 SAN DIEGO, CALIFORNIA 92123

COUNTY OF SAN DIEGO PARKS AND RECREATION

NO.	REVISIONS	APPR.	DATE

DESIGNED BY: GG
DRAWN BY: CADD
CHECKED BY: GG
PROJECT MANAGER: XX

LAKESIDE EQUESTRIAN FACILITY

SITE ELECTRICAL PLAN

SCALE: AS SHOWN
PROJ. NO. 1020367
FILE NO.
SHEET 22 OF 34

Z:\Lakeside Equestrian Facility\ELECTRICAL\E-2.dwg Wednesday, Feb. 05 2020 12:20pm gerry

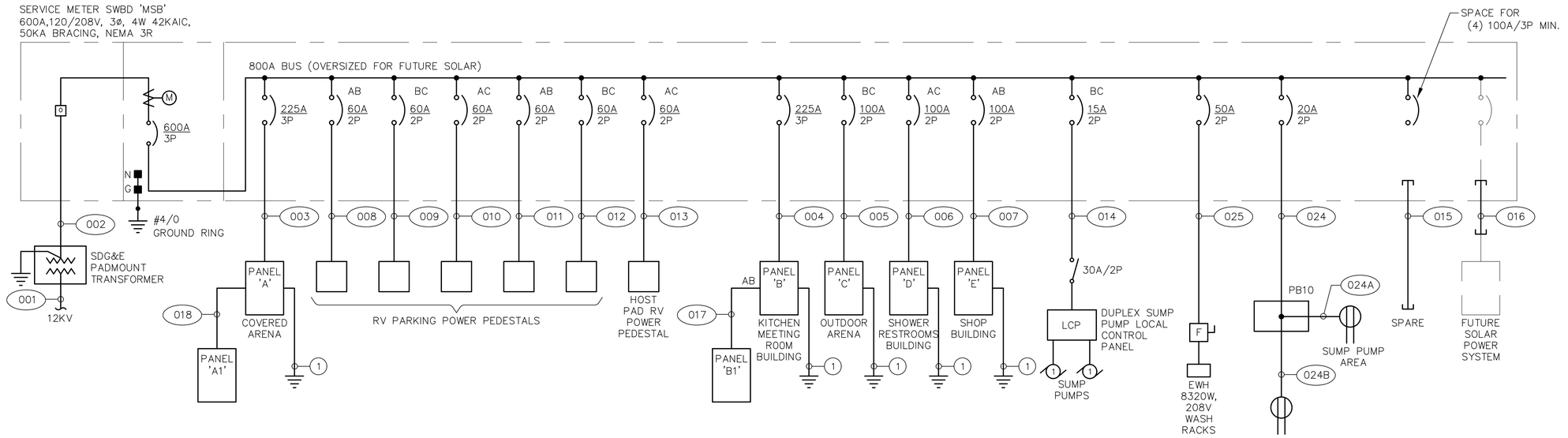

SERVICE DEMAND LOAD CALCULATIONS

COVERED ARENA BUILDING 86,400 SF X 0.5VA/SF	43 KVA
RV POWER 6 X 9600VA X 60% DEMAND FACTOR	35 KVA
SHOP AND STORAGE BUILDING ALLOW 10KVA	10 KVA
KITCHEN & MEETING RM BUILDING 3,200 SF X 15VA/SF	48 KVA
RESTROOM BUILDING ALLOW 10KVA	10 KVA
OUTDOOR ARENA ALLOW 10KVA	10 KVA
SPARE CAPACITY	30 KVA
	186 KVA

186KVA @ 120/208V, 3PH =517 AMPS

USE 600 AMP 120/208V, 3PH, 4W SERVICE

NOTES:

(1) PROVIDE 10' X 3/4" COPPERCLAD GROUND ROD.

E-3

REGISTERED PROFESSIONAL ENGINEER
GEORGE L. GREEN
No. E13691
Exp. 6/30/20
ELECTRICAL
STATE OF CALIFORNIA

MPA
MORAES / PHAM & ASSOCIATES
2131 Palomar Airport Rd. #120
Carlsbad, CA 92011

REGISTERED ENGINEER DATE

DEPARTMENT OF PARKS AND RECREATION
COUNTY OF SAN DIEGO
5500 OVERLAND DRIVE, SUITE 410 SAN DIEGO, CALIFORNIA 92123

COUNTY OF SAN DIEGO PARKS AND RECREATION

NO.	REVISIONS	APPR.	DATE

DESIGNED BY: GG
DRAWN BY: CADD
CHECKED BY: GG
PROJECT MANAGER: XX

LAKESIDE EQUESTRIAN FACILITY
SINGLE LINE DIAGRAM

SCALE: AS SHOWN
PROJ. NO.: 1020367
FILE NO.:
SHEET 23 OF 34

Z:\Lakeside Equestrian Facility\ELECTRICAL\E-3.dwg Wednesday, Feb. 05 2020 12:21pm gerry

CONDUIT/CABLE SCHEDULE

CONDUIT NO.	CONDUIT SIZE	FROM	TO	CABLE QTY.	CABLE SIZE	CABLE GND. *	VOLTAGE		REMARKS
001	4"	UTILITY TRANSFORMER PAD	SDG&E PRIMARY P.O.C.	–	–	–	12,000/3	UTILITY	CONDUCTORS BY SDG&E
002	(2) – 4"	UTILITY TRANSFORMER PAD	MAIN SERVICE SWITCHBOARD	–	–	–	208/3	POWER	CONDUCTORS BY SDG&E
003	3"	MAIN SERVICE SWITCHBOARD	PANEL A	4	4/0	4	208/3	POWER	–
004	3"	MAIN SERVICE SWITCHBOARD	PANEL B	4	4/0	4	208/3	POWER	–
005	2"	MAIN SERVICE SWITCHBOARD	PANEL C	3	1	8	208	POWER	–
006	1–1/2"	MAIN SERVICE SWITCHBOARD	PANEL D	3	1	8	208	POWER	–
007	1–1/2"	MAIN SERVICE SWITCHBOARD	PANEL E	3	1	8	208	POWER	–
008	2"	MAIN SERVICE SWITCHBOARD	RV PEDESTAL 1	3	4	8	208	POWER	–
009	2"	MAIN SERVICE SWITCHBOARD	RV PEDESTAL 2	3	4	8	208	POWER	–
010	2"	MAIN SERVICE SWITCHBOARD	RV PEDESTAL 3	3	4	8	208	POWER	–
011	2"	MAIN SERVICE SWITCHBOARD	RV PEDESTAL 4	3	4	8	208	POWER	–
012	2"	MAIN SERVICE SWITCHBOARD	RV PEDESTAL 5	3	4	8	208	POWER	–
013	2"	MAIN SERVICE SWITCHBOARD	RV PEDESTAL HOST	3	4	8	208	POWER	–
014	1"	MAIN SERVICE SWITCHBOARD	DUPLEX SUMP PUMP LCP	3	10	10	208/3	POWER	–
015	2"	MAIN SERVICE SWITCHBOARD	PB5 & PB7					POWER	SPARE VIA PB1,2,3,4,5,6
016	2"	MAIN SERVICE SWITCHBOARD	PB2					POWER	FUTURE SOLAR
017	1–1/2"	PANEL B	PANEL B1	3	2	8	208	POWER	–
018	2"	PANEL A	PANEL A1	4	1	6	208/3	POWER	–
019	2"	MAIN SERVICE SWITCHBOARD	PB3						SPARE VIA PB1,2
020	(2)1"	PANEL A	PB8						SPARE VIA PB2,3
021	(2)1"	PANEL B	PB8						
022	(2)1"	PANEL C	PB9						SPARE
023	(2)1"	PANEL C	PB8						SPARE VIA PB6,7
024	1"	MAIN SERVICE SWITCHBOARD	PB10	3	10	10	120/208	POWER	RECEPTACLES
024A	1"	PB10	RECEPTACLE SUPPLY	2	10	10	120	POWER	
024B	1"	PB10	RECEPTACLE WASH RACK	2	10	10	120	POWER	
025	1"	MAIN SERVICE SWITCHBOARD	EWH WASH RACK	2	6	8	208	POWER	
026	(2)1"	ANNOUNCERS BOOTH	SCOREBOARD					SIGNAL	SPARE VIA PB7,PB9

* – ONE GROUND CONDUCTOR PER CONDUIT

PANEL 'C' NEMA 3R

MOUNTING SURFACE — 10,000 A.I.C. SYM.

120/208 VOLT 1 PHASE 3 WIRE — MAIN 100A — BUS 100A

LOCATION	WATTAGE ØA	WATTAGE ØB	REC	LTG	POLE	BKR	CKT NO.	ØA ØB	CKT NO.	BKR	POLE	LTG	REC	WATTAGE ØA	WATTAGE ØB	LOCATION
SPARE					1	20	1		2	40	2			3200		SCOREBOARD
SPARE					1	20	3		4	–	–				3200	–
SPARE					1	20	5		6	20	1		3	540		RECEPT
SPARE					1	20	7		8	20	1				500	BLEACHER STOR. LTS
SPARE					1	20	9		10	20	1			500		BLEACHER STOR REC
SPARE					1	20	11		12	20	1				500	ANNOUNCER BOOTH LTS
SPARE					1	20	13		14	20	1			500		ANNOUNCER BOOTH REC
SPARE					1	20	15		16	20	1				300	SIGN LIGHTS
SPARE					1	20	17		18	20	1					SPARE
SPARE					1	20	19		20	20	1					SPARE
SPARE					1	20	17		18	20	1					SPARE
SPARE					1	20	19		20	20	1					SPARE
SPARE					1	20	21		22	20	1					SPARE
SPARE					1	20	23		24	20	1					SPARE
	0	0	WATTS/LINE											4740	4500	

ØA= 4740 ØB= 4500

TOTAL WATTS= 9240 AMPS/LINE= 44 LCL AMPS= 57

NOTES:

1. .

E-4

REGISTERED PROFESSIONAL ENGINEER — GEORGE J. GREEN — NO. E13691 — EXP. 6/30/20 — ELECTRICAL — STATE OF CALIFORNIA

MPA
MORAES / PHAM & ASSOCIATES
2131 Palomar Airport Rd. #120
Carlsbad, CA 92011

REGISTERED ENGINEER DATE

DEPARTMENT OF PARKS AND RECREATION
COUNTY OF SAN DIEGO
5500 OVERLAND DRIVE, SUITE 410 SAN DIEGO, CALIFORNIA 92123

COUNTY OF SAN DIEGO PARKS AND RECREATION

NO.	REVISIONS	APPR.	DATE

DESIGNED BY: GG
DRAWN BY: CADD
CHECKED BY: GG
PROJECT MANAGER: XX

LAKESIDE EQUESTRIAN FACILITY
CONDUIT/CABLE SCHEDULE AND PANEL SCHEDULE

SCALE AS SHOWN
PROJ. NO. 1020367
FILE NO.
SHEET 24 OF 34

Z:\Lakeside Equestrian Facility\ELECTRICAL\E-4.dwg Wednesday, Feb. 05 2020 12:42pm gerry

MOUNTING SURFACE — 120/208V VOLT 3ø PHASE 4W WIRE

PANEL 'A' NEMA 3R

42,000 A.I.C. SYM. — MAIN 225A — BUS 225A

LOCATION	WATTAGE ØA	WATTAGE ØB	WATTAGE ØC	REC	LTG	POLE	BKR	CKT NO.	ØA ØB ØC	CKT NO.	BKR	POLE	LTG	REC	WATTAGE ØA	WATTAGE ØB	WATTAGE ØC	LOCATION
ARENA LIGHTING	1320				6	1	20	1		2	15	2			1123			ARENA FANS (2)
ARENA LIGHTING		1320			6	1	20	3		4	–	–				1123		–
ARENA LIGHTING			1320		6	1	20	5		6	15	2					1123	ARENA FANS (2)
ARENA LIGHTING	1320				6	1	20	7		8	–	–			1123			–
ARENA LIGHTING		1320			6	1	20	9		10	15	2				1123		ARENA FANS (2)
ARENA LIGHTING			1320		6	1	20	11		12	–	–					1123	–
ARENA LIGHTING	1320				6	1	20	13		14	15	2			1123			ARENA FANS (2)
ARENA LIGHTING		1320			6	1	29	15		16	–	–				1123		–
ARENA LIGHTING			1320		6	1	20	17		18	20	1					500	ARENA RECEPT
ARENA LIGHTING	1320				6	1	20	19		20	20	1			500			ARENA RECEPT
ARENA LIGHTING		1320			6	1	20	21		22	20	1				500		ARENA RECEPT
ARENA LIGHTING			1320		6	1	20	23		24	20	1					500	ARENA RECEPT
ARENA LIGHTING	1320				6	1	20	25		26	50	2			4160			TRUCK STA EWH
ARENA LIGHTING		1320			6	1	20	27		28	–	–				4160		–
ARENA LIGHTING			1320		6	1	20	29		30	40	2					3200	SCORBOARD
ARENA LIGHTING	1320				6	1	20	31		32	–	–			3200			–
COMPOST AREA LTS		500				1	20	33		34	20	1						SPARE
COMPOST AREA REC			500			1	20	35		36	20	1						SPARE
PANEL A1	1500					3	90	37		38	20	1						SPARE
–		1500				–	–	39		40	20	1						SPARE
–			1500			–	–	41		42	20	1						SPARE
	9420	8600	8600	WATTS/LINE											11229	8029	6446	

ØA= 20649 — ØB= 16629 — ØC= 14956

TOTAL WATTS= 51324 — AMPS/LINE= 172 — LCL AMPS= 210

MOUNTING SURFACE — 120/208V VOLT 3ø PHASE 4W WIRE

PANEL 'B' NEMA 1

42,000 A.I.C. SYM. — MAIN 225A — BUS 225A

LOCATION	WATTAGE ØA	WATTAGE ØB	WATTAGE ØC	REC	LTG	POLE	BKR	CKT NO.	ØA ØC ØB	CKT NO.	BKR	POLE	LTG	REC	WATTAGE ØA	WATTAGE ØB	WATTAGE ØC	LOCATION
SOFT SERVE MACHINE	1700					2	20	1		2	20	1			720			FROZEN BEV. DISPENSER
–		1700				–	–	3		4	20	1				620		REACH–IN REFRIG.
39" REACH–IN COOLER			780			1	20	5		6	20	1					910	REACH–IN FREAZER
COFFEE GRINDER	680					1	20	7		8	20	1			970			HOT DOG GRILL
COFFEE BREWER		3050				2	30	9		10	20	1				540		REFRIG. TABLE
–			3050			–	–	11		12	20	1					1560	MICROWAVE
ICE MACHINE	690					2	20	13		14	20	1			200			WORKTOP REFRIG.
–		690				–	–	15		16	20	1				780		39" REACH–IN COOLER
P.O.S. SYSTEM			1500			1	20	17		18	20	1						SPARE
HORIZONTAL FREEZER	120					1	20	19		20	20	1						SPARE
HORIZ. MERCH. WARMER		1020				2	20	21		22	20	1						SPARE
–			1020			–	–	23		24	20	1						SPARE
NACHO CHEESE WARMER	1680					1	20	25		26	20	1			100			GAS SOLENOID
DRAWER WARMER		900				1	20	27		28	20	1				500		KITCH. HOOD
POP CORN MACHINE			1405			2	20	29		30	20	1					500	KITCH. FAN CONT. CNTR
–	1405					–	–	31		32	30	30			2004			SUPPLY FAN MAU–1
								33		34	–	–				2004		–
								35		36	–	–					2004	–
PANEL B1	8310					2	100	37		38	30	30			2004			EXHAUST FAN EF–1
–		7032				–	–	39		40	–	–				2004		–
SPARE						1	20	41		42	–	–					2004	–
	14585	14392	7755	WATTS/LINE											5998	6448	6978	

ØA= 20583 — ØB= 20840 — ØC= 14733

TOTAL WATTS= 56156 — AMPS/LINE= 171 — LCL AMPS= 190

MOUNTING SURFACE — 120/208V VOLT 3ø PHASE 4W WIRE

PANEL 'A1' NEMA 3R

10,000 A.I.C. SYM. — MAIN 100A — BUS 100A

LOCATION	WATTAGE ØA	WATTAGE ØB	WATTAGE ØC	REC	LTG	POLE	BKR	CKT NO.	ØA ØC ØB	CKT NO.	BKR	POLE	LTG	REC	WATTAGE ØA	WATTAGE ØB	WATTAGE ØC	LOCATION
PATIO AREA	500					1	20	1		2	20	1			500			RECEPT
STORAGE LTS		500				1	20	3		4	20	1				500		RECEPT
STORAGE REC			500			1	20	5		6	20	1					500	RECEPT
SPARE						1	20	7		8	20	1			500			RECEPT
SPARE						1	20	9		10	20	1				500		ANNOUNCER LTS
SPARE						1	20	11		12	20	1					500	ANNOUNCER REC
SPARE						1	20	13		14	20	1						SPARE
SPARE						1	20	15		16	20	1						SPARE
SPARE						1	20	17		18	20	1						SPARE
SPARE						1	20	19		20	20	1						SPARE
SPARE						1	20	21		22	20	1						SPARE
SPARE						1	20	23		24	20	1						SPARE
	500	500	500	WATTS/LINE											1000	1000	1000	

ØA= 1500 — ØB= 1500 — ØC= 1500

TOTAL WATTS= 4500 — AMPS/LINE= 13 — LCL AMPS= 16

MOUNTING SURFACE — 120/208 VOLT 1 PHASE 3 WIRE

PANEL 'B1' NEMA 1

42,000 A.I.C. SYM. — MAIN 100A — BUS 100A

LOCATION	WATTAGE ØA	WATTAGE ØB	REC	LTG	POLE	BKR	CKT NO.	ØA ØB	CKT NO.	BKR	POLE	LTG	REC	WATTAGE ØA	WATTAGE ØB	LOCATION
MEETING RM LTS	1620				1	20	1		2	20	1			1000		CEILING FANS
MEETING RM LTS		1042			1	20	3		4	20	1				1000	CEILING FANS
EXTERIOR LTS	1000				1	20	5		6	20	1			1000		CEILING FANS
EXH FNAS		300			1	20	7		8	20	1				1000	CEILING FANS
SPARE					1	20	9		10	20	1			720		RECEPT
SPARE					1	20	11		12	20	1				720	RECEPT
SPARE					1	20	13		14	20	1			720		RECEPT
SPARE					1	20	15		16	20	1				720	RECEPT
SPARE					1	20	17		18	30	2			2250		EWH
SPARE					1	20	19		20	–	–				2250	–
	2620	1342	WATTS/LINE											5690	5690	

ØA= 8310 — ØB= 7032

TOTAL WATTS= 15342 — AMPS/LINE= 74 — LCL AMPS= 90

MOUNTING SURFACE — 120/208 VOLT 1 PHASE 3 WIRE

PANEL 'D' NEMA 1

42,000 A.I.C. SYM. — MAIN 100A — BUS 100A

LOCATION	WATTAGE ØA	WATTAGE ØB	REC	LTG	POLE	BKR	CKT NO.	ØA ØB	CKT NO.	BKR	POLE	LTG	REC	WATTAGE ØA	WATTAGE ØB	LOCATION
EXTERIOR BLDG LTS	200				1	20	1		2	20	1			360		CONV. RECEPT.
INTERIOR BLDG LTS		200			1	20	3		4	20	1					SPARE
EWH	2250				2	30	5		6	20	1					SPARE
–		2250			–	–	7		8	20	1					SPARE
HAND DRYER	1500				1	20	9		10	20	1					SPARE
HAND DRYER		1500			1	20	11		12	20	1					SPARE
SPARE					1	20	13		14	20	1					SPARE
SPARE					1	20	15		16	20	1					SPARE
SPARE					1	20	17		18	20	1					SPARE
SPARE					1	20	19		20	20	1					SPARE
	3950	3950	WATTS/LINE											360	0	

ØA= 4310 — ØB= 3950

TOTAL WATTS= 8260 — AMPS/LINE= 40 — LCL AMPS= 50

MOUNTING SURFACE — 120/208 VOLT 1 PHASE 3 WIRE

PANEL 'E' NEMA 1

42,000 A.I.C. SYM. — MAIN 100A — BUS 100A

LOCATION	WATTAGE ØA	WATTAGE ØB	REC	LTG	POLE	BKR	CKT NO.	ØA ØB	CKT NO.	BKR	POLE	LTG	REC	WATTAGE ØA	WATTAGE ØB	LOCATION
EXTERIOR BLDG LTS	600				1	20	1		2	20	1			720		CONV. RECEPT.
INTERIOR BLDG LTS		840			1	20	3		4	20	1				720	CONV. RECEPT.
SPARE					1	20	5		6	20	1			720		CONV. RECEPT.
SPARE					1	20	7		8	20	1				720	CONV. RECEPT.
SPARE					1	20	9		10	20	1			500		IRRIGATION CONTROL
SPARE					1	20	11		12	20	1					SPARE
SPARE					1	20	13		14	20	1					SPARE
SPARE					1	20	15		16	20	1					SPARE
SPARE					1	20	17		18	20	1					SPARE
SPARE					1	20	19		20	20	1					SPARE
	600	840	WATTS/LINE											1940	1440	

ØA= 2540 — ØB= 2280

TOTAL WATTS= 4820 — AMPS/LINE= 23 — LCL AMPS= 24

E-5

REGISTERED PROFESSIONAL ENGINEER — CAROLD L. GREEN — No. E15691 — Exp. 6/30/20 — ELECTRICAL — STATE OF CALIFORNIA

MPA
MORAES / PHAM & ASSOCIATES
2131 Palomar Airport Rd. #120
Carlsbad, CA 92011

REGISTERED ENGINEER — DATE

DEPARTMENT OF PARKS AND RECREATION
COUNTY OF SAN DIEGO
5500 OVERLAND DRIVE, SUITE 410 SAN DIEGO, CALIFORNIA 92123

COUNTY OF SAN DIEGO PARKS AND RECREATION

NO.	REVISIONS	APPR.	DATE

DESIGNED BY: GG
DRAWN BY: CADD
CHECKED BY: GG
PROJECT MANAGER: XX

LAKESIDE EQUESTRIAN FACILITY
BUILDING PANEL SCHEDULES

SCALE AS SHOWN — SHEET 25 OF 34
PROJ. NO. 1020367
FILE NO.

Z:\Lakeside Equestrian Facility\ELECTRICAL\E-5.dwg Wednesday, Feb. 05 2020 12:25pm gerry

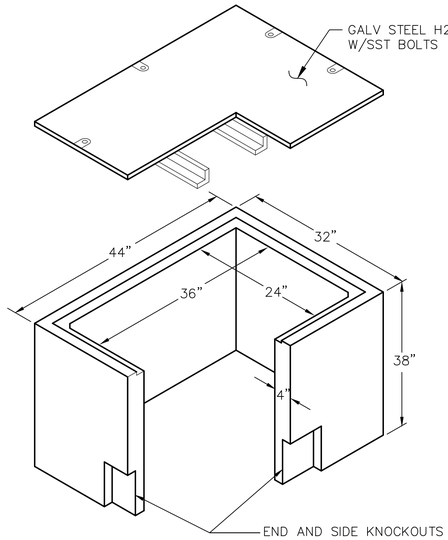

3/E-6 **2' x 3' CONCRETE PULLBOX**
NOT TO SCALE

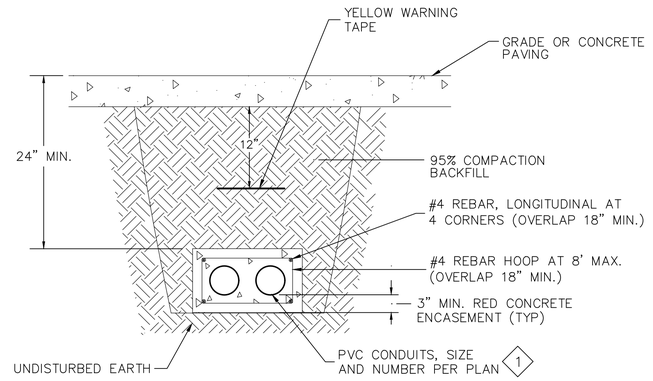

2/E-6 **CONCRETE ENCASED CONDUIT**
NOT TO SCALE

1 REFER TO SPECIFICATIONS FOR CONDUIT REQUIREMENTS AND SEPARATION.

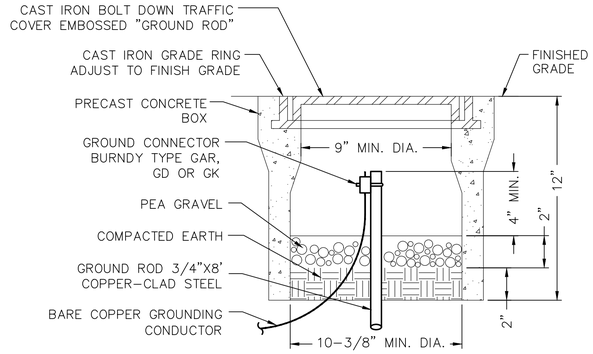

1/E-6 **GROUND ROD AND BOX INSTALLATION**
NTS

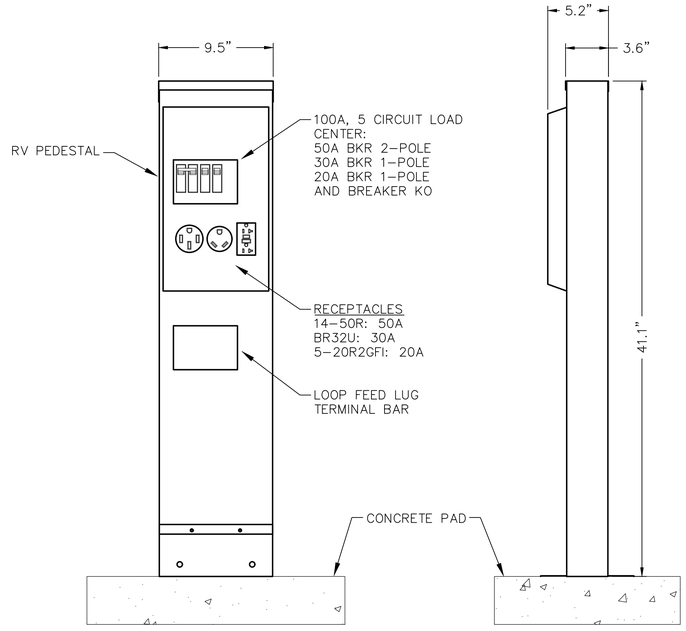

5/E-6 **RV PEDESTAL (UNMETERED)**
NOT TO SCALE

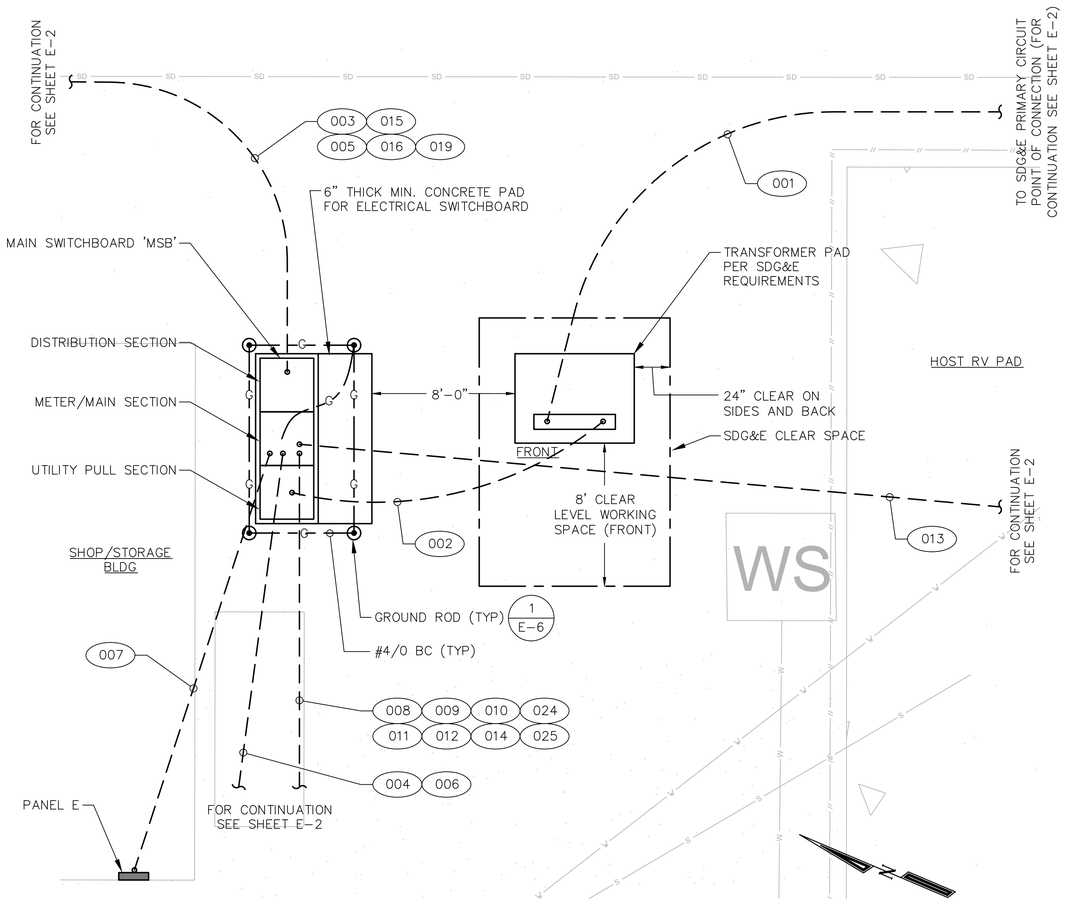

4/E-6 **MAIN SWITCHBOARD 'MSB' AREA PLAN**
SCALE: 1/4" = 1'–0"

GRAPHIC SCALE
0 2' 4' 8'
SCALE: 1/4"=1'–0"

E-6

REGISTERED PROFESSIONAL ENGINEER CHRIS L. GREEN No. E15691 Exp. 6/30/20 ELECTRICAL STATE OF CALIFORNIA

MPA
MORAES / PHAM & ASSOCIATES
2131 Palomar Airport Rd. #120
Carlsbad, CA 92011

REGISTERED ENGINEER DATE

DEPARTMENT OF PARKS AND RECREATION
COUNTY OF SAN DIEGO
5500 OVERLAND DRIVE, SUITE 410 SAN DIEGO, CALIFORNIA 92123

COUNTY OF SAN DIEGO PARKS AND RECREATION

NO.	REVISIONS	APPR.	DATE

DESIGNED BY:	GG
DRAWN BY:	CADD
CHECKED BY:	GG
PROJECT MANAGER:	XX

LAKESIDE EQUESTRIAN FACILITY
ELECTRICAL DETAILS

SCALE	AS SHOWN
PROJ. NO.	1020367
FILE NO.	
SHEET	26
OF	34

Z:\Lakeside Equestrian Facility\ELECTRICAL\E-6.dwg Wednesday, Feb. 05 2020 12:27pm gerry

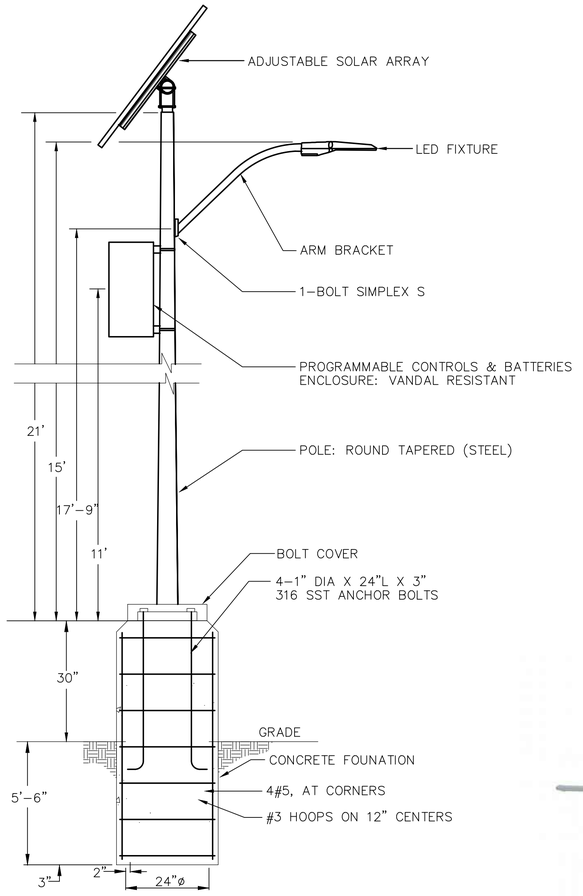

1 E–7 FIXTURE TYPE 'P1/P2/P3'



FIXTURE TYPE 'P1/P2/P3"

LIGHTING FIXTURE SCHEDULE

SYMBOL	TAG	DESCRIPTION	FIXTURE WATTS / VOLTAGE	LAMP TYPE / NO. OF LAMPS / WATTS	MOUNTING	MANUFACTURER / CATALOG NO.
	P1	LED AREA LIGHT FIXTURE WITH LED DRIVERS AND SURGE PROTECTOR, SOLAR ARRAY AND BATTERIES. THE SYSTEM SHALL BE CAPABLE OF PROVIDING 4 NIGHTS OF RESERVE ENERGY IN INCLEMENT WEATHER CONDITIONS. AUTOMATIC LOW VOLTAGE SHUTDOWN DEVICE SHALL PROTECT BATTERY FROM EXTREME DEEP DISCHARGES. 25 YEARS WARRANTY FOR SOLAR PANELS AND 5 YEARS WARRANTY FOR THE SYSTEM. BATTERIES SHALL BE 100 PERCENT ZERO MAINTENANCE SEALED FAA APPROVED VRLA/GEL BATTERIES. PROVIDE WITH ENERGY MANAGEMENT SYSTEM (EMS). 20' TAPERED STEEL POLE (4' ARM) . COLOR TO BE DETERMINED. PROVIDE WITH TYPE II SHORT DISTRIBUTION WITH BACKLIGHT SHIELD. FIXTURE SHALL PROVIDE 5230 LUMENS. EACH FIXTURE SHALL INCLUDE PROGRAMMABLE CONTROLLER.	91W SOLAR	LED 40 WHITE LEDS 91W LUMENS: 5230	POLE	CARMANAH EG340–WH–45–RND–N–5230–5–SF–STR.LWY.D–T2SB–HT–08–SV–E–43K–N–04–16 POLE:
	P2	SIMILAR TO TYPE 'P1' EXCEPT WITH TYPE III MEDIUM DISTRIBUTION WITH BACKLIGHT SHIELD. FIXTURE SHALL PROVIDE 4480 LUMENS.	97W SOLAR	LED 40 WHITE LEDS 97W LUMENS: 4480	POLE	CARMANAH EG340–WH–45–RND–N–4480–5–SF–STR.LWY.D–T3MB–HT–08–SV–E–43K–N–04–16. POLE:
	P3	SIMILAR TO TYPE 'P1' EXCEPT WITH TYPE III MEDIUM DISTRIBUTION. FIXTURE SHALL PROVIDE 6060 LUMENS.	94W SOLAR	LED 40 WHITE LEDS 94W LUMENS: 6060	POLE	CARMANAH EG340–WH–45–RND–N–6060–5–SF–STR.LWY.D–T3M–HT–08–SV–E–43K–N–04–16. POLE:
	A	LED HIGH BAY LUMINAIRE WITH UNIFORM CIRCULAR LIGHT DISTRIBUTION. HEAT & IMPACT RESISTANT GLASS FROSTED LENS. DIE–CAST ALUMINUM LAMP HOUSING & ADAPTER WITH EPOXY POWDER COAT, SILICONE GASKETS AND STAINLESS STEEL EXTERNAL HARDWARE. FACTORY SEALED. IP65 LOCATION LISTED. PENDANT MOUNTED. DIMMABLE	220W 120V	LED 1 SET 220W	PENDANT	LITETRONICS: HB220W140DL LITETRONICS: 120" GRIPPLE EXPRESS HANGER: XP2–LG–10FT
	B	LED FLOODLIGHT 4000K	54W	LED	1/2"C	LITHONIA DSXF2–LED–P1–40K–FL–120–THK–PEX–SF–UBV–DDBXD OR EQUAL
	C	LED VAPORTIGHT POLYCARBONATE FULLY GASKETED WET LOCATION RATED LIGHT FIXTURE. PENDANT STEM MOUNTED. 0–10V DIMMING	33W	LED	PENDANT	LITHONIA XVML–L48–3500LM–MVOLT–40K–80CRI OR EQUAL
	D	LED WRAP PENDANT LIGHT FIXTURE. PENDANT STEM MOUNTED. 0–10V DIMMING	50W	LED	PENDANT	LITHONIA BLWP4–60L–ADPT–GZ10–LP840 OR EQUAL
	D1	SIMILAR TO D, EXCEPT 24" WIDE AND WALL MOUNTED	30W	LED	PENDANT	LITHONIA BLWP2–33L–ADPT–GZ10–LP840 OR EQUAL
	DE	SIMILAR TO D, EXCEPT WITH EMERGENCY BATTERY BACKUP SELF–DIAGNOSTIC	50W	LED	PENDANT	LITHONIA BLWP4–60L–ADPT–GZ10–LP840–E10WLCP OR EQUAL
	E	LED 2' X 4' GRID TROFFER WITH 1/8" THICK ACRYLIC PRISMATIC LENS. MOUNTED RECESSED IN CEILING GRID. 0–10V DIMMING	50W	LED	LAY–IN	LITHONIA 2GTL–460L–A12125–GZ10–LP840 OR EQUAL
	F	LED WALL PACK WITH FULL CUTOFF AND FORWARD THROW OPTICS.	50W	LED	WALL	LITHONIA WDGE2–LED–P5–40K–80CRI–VF–MVOLT–SRM–DDBXD OR EQUAL
	G	LED SMALL WALL PACK.	10W	LED	WALL	LITHONIA OLWP–LED–P1–40K–120–DDB OR EQUAL

GENERAL NOTES:

1. FIXTURES SHALL BE PROVIDED WITH ALL OPTIONS AND ACCESSORIES AS SPECIFIED IN THE DESCRIPTIONS, CATALOG NUMBERS, GENERAL NOTES, AND AS REQUIRED FOR A COMPLETE INSTALLATION IN THE LOCATIONS SHOWN ON THE DRAWINGS. COORDINATE FIXTURE SUPPLY WITH DIMMING CONTROLS SPECIFIED ELSEWHERE ON THE DRAWINGS.
2. PROVIDE OCCUPANCY SENSORS, DIMMERS, TIME CLOCKS, AND PHOTOCELLS AS REQUIRED AND COORDINATED WITH LIGHT FIXTURE SUPPLY FOR COMPLIANCE WITH CURRENT APPLICABLE CALIFORNIA ENERGY CODE.
3. TYPES P1, P2, AND P3 FIXTURES: THE SOLAR ARRAYS MUST BE ABLE TO BE INFINITELY ROTATED 360 DEGREES ON THE HORIZONTAL PLANE TO FACE THE SUN REGARDLESS OF THE DIRECTION OF THE FIXTURE. THE ARRAY MUST ALSO BE INFINITELY ADJUSTABLE UP TO 320 DEGREES AZIMUTH (VERTICAL PLANE). CUSTOM ELECTRICAL LOAD CALCS MUST BE PROVIDED WITH BID SUBMISSION TO SUITE GEOGRAPHICAL LOCATION OF SITE AND WEATHER CONDITIONS. BATTERIES MUST BE CAPABLE OF DUSK TILL DAWN OPERATION WITH 4.5 DAYS OF BATTERY STORAGE CAPACITY. ALL COMPONENTS SHALL BE MOUNTED ON TOP OF THE LIGHT FIXTURE POLE AND SHOULD NOT BE ACCESSIBLE FROM THE GROUND WITHOUT ANY MECHANICAL MEANS. THE SOLAR ELECTRICAL PANELS SHALL CONTAIN STATE OF THE ART MULTICRYSTALINE SOLAR CELLS WITH CONVERSION EFFICIENCY OF OVER 16 PERCENT. SOLAR PANEL WARRANTY SHALL BE A MINIMUM OF 25 YEARS. POWER DEGRADATION NOT MORE THAN 10 PERCENT WITHIN 12 YEARS. PROVIDE VANDAL PROTECTION ON SOLAR PANELS.

E-7

REGISTERED PROFESSIONAL ENGINEER — GERALD V. GRETZ — No. E15691 — Exp. 6/30/20 — ELECTRICAL — STATE OF CALIFORNIA

MPA
MORAES/PHAM & ASSOCIATES
2131 Palomar Airport Rd. #120
Carlsbad, CA 92011

REGISTERED ENGINEER DATE

DEPARTMENT OF PARKS AND RECREATION
COUNTY OF SAN DIEGO
5500 OVERLAND DRIVE, SUITE 410 SAN DIEGO, CALIFORNIA 92123

COUNTY OF SAN DIEGO PARKS AND RECREATION

NO.	REVISIONS	APPR.	DATE

DESIGNED BY: GG
DRAWN BY: CADD
CHECKED BY: GG
PROJECT MANAGER: XX

LAKESIDE EQUESTRIAN FACILITY
LIGHT FIXTURE SCHEDULE AND DETAILS

SCALE: AS SHOWN
PROJ. NO.: 1020367
FILE NO.:
SHEET 27 OF 34

Z:\Lakeside Equestrian Facility\ELECTRICAL\E-7.dwg Wednesday, Feb. 05 2020, 1:23pm gerry

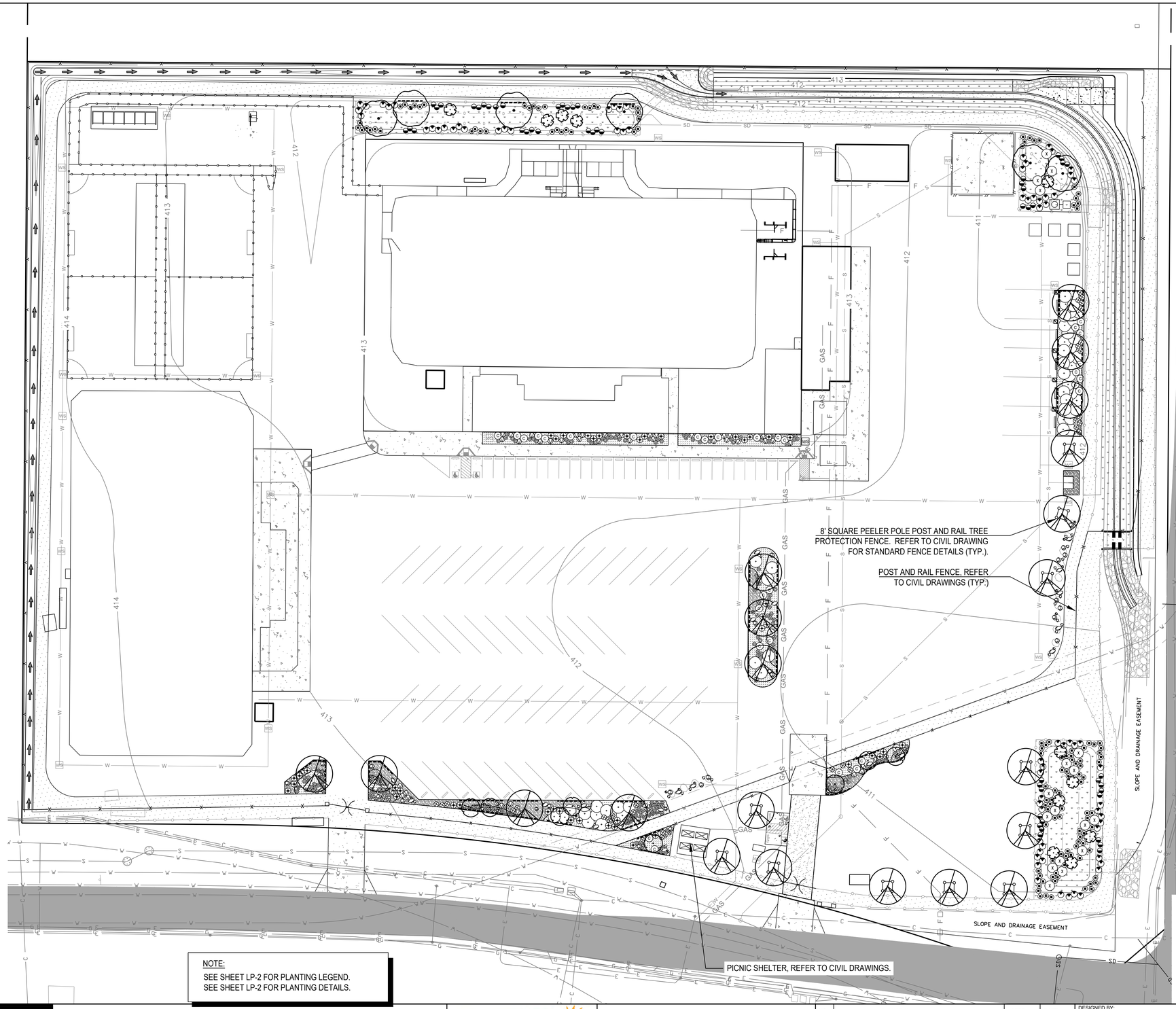

PROJECT GENERAL NOTES

1. ALL LOCAL, MUNICIPAL AND STATE LAWS, RULES AND REGULATIONS GOVERNING OR RELATING TO ANY PORTION OF THE WORK ARE HEREBY INCORPORATED INTO AND MADE A PART OF THE PROJECT SPECIFICATIONS AND THEIR PROVISIONS SHALL BE CARRIED OUT BY THE CONTRACTOR. THE CONTRACTOR IS RESPONSIBLE FOR THE ENFORCEMENT OF FEDERAL AND STATE OF CALIFORNIA OCCUPATIONAL SAFETY AND HEALTH REGULATIONS AND REQUIREMENTS.
2. ALL WORK SHALL COMPLY WITH THE STATE BUILDING CODE, PART 2, TITLE 24, C.A.C., SECTION 2-11B FOR SPECIAL STANDARDS FOR ACCESSIBILITY.
3. ALL WORK SHALL COMPLY WITH THE COUNTY OF SAN DIEGO WATER EFFICIENT LANDSCAPE DESIGN MANUAL (LATEST VERSION). WHENEVER COUNTY DESIGN STANDARDS, MANUALS, DETAILS OR SPECIFICATIONS CONFLICT ON ANY MATTER, THE COUNTY PROJECT MANAGER SHALL DETERMINE WHICH SHALL GOVERN.
4. ALL IRRIGATION WORK SHALL COMPLY WITH THE REGULATIONS, SPECIFICATIONS AND DETAILS OF LAKESIDE WATER DISTRICT AND COUNTY OF SAN DIEGO FOR POTABLE WATER SYSTEMS. COMPLY WITH ALL EMERGENCY DROUGHT REGULATIONS THAT ARE IN PLACE AT THE TIME OF CONSTRUCTION AND MAINTENANCE.
5. THE CONTRACTOR SHALL COMPLY WITH THE GEOTECHNICAL SOILS REPORT RECOMMENDATIONS AS THEY RELATE TO THE WORK. THE SOILS REPORT SHALL BE PART OF THE CONSTRUCTION SPECIFICATIONS.
6. CONTRACTOR AGREES TO ASSUME SOLE RESPONSIBILITY FOR JOB SITE CONDITIONS DURING THE COURSE OF CONSTRUCTION OF THE PROJECT, INCLUDING SAFETY OF ALL PERSONS AND PROPERTY . THIS REQUIREMENT SHALL APPLY CONTINUOUSLY AND NOT BE LIMITED TO NORMAL WORKING HOURS AND THAT THE CONTRACTOR SHALL DEFEND, INDEMNIFY, AND HOLD THE COUNTY AND THE LANDSCAPE ARCHITECT HARMLESS FROM ANY AND ALL LIABILITY REAL OR ALLEGED, IN CONNECTION WITH THE PERFORMANCE OF WORK ON THE PROJECT, EXCEPTING FOR LIABILITY ARISING FROM THE SOLE NEGLIGENCE OF THE COUNTY OR THE LANDSCAPE ARCHITECT.
7. THE CONTRACTOR AGREES TO HOLD THE LANDSCAPE ARCHITECT HARMLESS FROM ANY CLAIMS ARISING OUT OF THE CONTRACTOR'S OPERATIONS OR THE OPERATIONS OF ANY OF THE CONTRACTOR'S SUBCONTRACTORS, MATERIALS SUPPLIERS, OR AGENTS.
8. THE CONTRACT DRAWINGS REPRESENT THE FINISHED CONSTRUCTION AND DO NOT INDICATE METHODS, PROCEDURES, OR SEQUENCE OF CONSTRUCTION. THE CONTRACTOR SHALL TAKE THE NECESSARY PRECAUTIONS TO MAINTAIN THE INTEGRITY OF STRUCTURES DURING CONSTRUCTION. THE CONTRACTOR IS RESPONSIBLE FOR THE DESIGN, CONSTRUCTION, AND MAINTENANCE OF ALL SAFETY DEVICES, INCLUDING SHORING AND BRACING.
9. THE CONTRACTOR SHALL VERIFY THE LOCATIONS OF ALL-EXISTING AND NEW UTILITIES, STRUCTURES, EASEMENTS, AND SERVICES BEFORE WORK. THE LOCATIONS AND EXTENT OF UTILITIES, STRUCTURES AND SERVICES SHOWN IN THESE PLANS ARE APPROXIMATE ONLY . UNDERGROUND UTILITIES OR FACILITIES MAY EXIST THAT HAVE NOT BEEN RECORDED OR REPORTED.
10. THE CONTRACTOR SHALL PROTECT ALL EXISTING UTILITIES, LANDSCAPING, AND FEATURES TO REMAIN ON AND ADJACENT TO, THE PROJECT SITE DURING CONSTRUCTION. CONTRACTOR SHALL REPAIR, AT THE CONTRACTOR'S OWN EXPENSE, ALL DAMAGE RESULTING FROM HIS/HER OPERATIONS OR NEGLIGENCE.
11. IN AN EMERGENCY THREATENING THE SAFETY OF LIFE, WORK OR ADJOINING PROPERTY, THE CONTRACTOR IS HEREBY INSTRUCTED TO ACT AT THE CONTRACTOR'S DISCRETION TO PREVENT SUCH LOSS OR INJURY.
12. ANY DISCREPANCIES OR OMISSIONS IN THE PLANS SHALL BE IMMEDIATELY REPORTED TO COUNTY PROJECT MANAGER. ANY DISCREPANCIES BETWEEN THE FIELD CONDITIONS AND THE CONTRACT DOCUMENTS AND/OR DESIGN INTENT AFFECTING THE SUCCESSFUL COMPLETION AND/OR COST OF THE PROJECT SHALL BE REPORTED TO THE COUNTY AND THE LANDSCAPE ARCHITECT IMMEDIATELY. ALL WORK RELATED TO THE PROBLEM AREA SHALL CEASE UNTIL THE DISCREPANCIES HAVE BEEN RESOLVED BY THE COUNTY AND LANDSCAPE ARCHITECT IN WRITING. ANY CONTINUATION OF WORK PRIOR TO THE RESOLUTION OF DISCREPANCIES IS AT THE CONTRACTOR'S RISK AND EXPENSE.
13. THE CONTRACTOR SHALL OBTAIN AND REVIEW THE PERTINENT ENGINEERING AND LANDSCAPE ARCHITECTURE PLANS BEFORE BEGINNING WORK. THE CONTRACTOR SHALL VISIT THE SITE AND VERIFY ALL DIMENSIONS PRIOR TO SUBMITTING A BID. PERMITS FOR ANY CONSTRUCTION DEPICTED IN THESE PLANS SHALL BE OBTAINED BY THE CONTRACTOR.
14. DO NOT SCALE ANY DRAWING IN THE SET. ALL WRITTEN DIMENSIONS SHALL TAKE PRECEDENCE OVER THE SCALE SHOWN ON THE PLANS, SECTIONS, AND DETAILS.
15. CONTRACTOR SHALL NOTIFY UNDERGROUND SERVICE ALERT (811) BEFORE START OF CONSTRUCTION (2 WORKING DAYS BEFORE DIGGING).
16. THE CONTRACTOR IS REQUIRED TO SUBMIT ITEMS LISTED IN THE SPECIFICATIONS SUBMITTAL SUBSECTIONS TO THE COUNTY PROJECT MANAGER AND OBTAIN THE COUNTY PROJECT MANAGER'S APPROVAL PRIOR TO DELIVERY TO THE SITE AND PROCEEDING WITH CONSTRUCTION. THE DETERMINATION OF "EQUAL" SUBSTITUTIONS SHALL BE MADE ONLY BY THE COUNTY PROJECT MANAGER AND ARE SUBJECT TO APPROVAL BY THE COUNTY PROJECT MANAGER PRIOR TO INSTALLATION.
17. ANY AND ALL CHANGES TO THE LANDSCAPE CONSTRUCTION, IRRIGATION AND PLANTING PLANS AS A RESULT OF CONSTRUCTION OR VALUE ENGINEERING SHALL BE DOCUMENTED AND SUBMITTED BY THE CONTRACTOR TO THE COUNTY FOR REVIEW AND APPROVAL BY THE COUNTY PROJECT MANAGER PRIOR TO WORK BEING PERFORMED. ONCE ACCEPTED, THE CONTRACTOR IS REQUIRED TO DOCUMENT THE APPROVED CHANGES ON AN AS-BUILT SET OF DRAWINGS TO BE MAINTAINED ON-SITE DURING CONSTRUCTION AND SUBMITTED TO THE COUNTY PROJECT MANAGER AT THE COMPLETION OF THE PROJECT.
18. NO REVISIONS OR CHANGES SHALL BE MADE TO THESE PLANS WITHOUT REVIEW AND WRITTEN APPROVAL OF THE COUNTY AND THE LANDSCAPE ARCHITECT THROUGH AN RFI 'REQUEST FOR INFORMATION' SUBMITTED BY THE CONTRACTOR.
19. THE CONTRACTOR SHALL VERIFY WITH THE COUNTY PROJECT MANAGER THAT THE PLANS TO BE USED FOR CONSTRUCTION ARE CURRENT AND APPROVED.
20. ALL LANDSCAPE AREAS SHALL BE FINISH GRADED TO REMOVE ROCKS AND TO ENSURE SURFACE DRAINAGE AWAY FROM BUILDINGS.
21. AFTER COMPLETION OF THE MAINTENANCE PERIOD AND PROJECT TURN-OVER, THE LAKESIDE EQUESTRIAN CENTER FACILITY OPERATOR (TO BE DETERMINED) IS RESPONSIBLE FOR MAINTAINING THE LANDSCAPE, INCLUDING THE PUBLIC RIGHT-OF-WAY, IN A HEALTHY, DISEASE FREE CONDITION.

COMPLIANCE STATEMENT

I, NICHOLAS DELORENZO, AM FAMILIAR WITH THE REQUIREMENTS FOR LANDSCAPE AND IRRIGATION PLANS CONTAINED IN THE COUNTY LANDSCAPE WATER CONSERVATION REGULATIONS, IN TITLE 8, DIVISION 6, CHAPTER 7, OF THE SAN DIEGO COUNTY CODE OF REGULATORY ORDINANCES. I HAVE PREPARED THIS PLAN IN COMPLIANCE WITH THOSE REGULATIONS. I CERTIFY THAT THE PLAN IMPLEMENTS THOSE REGULATIONS TO PROVIDE EFFICIENT USE OF WATER.

SIGNATURE — Date: 2/3/2020

0 20 40 80

SCALE: 1" = 40'-0"

LP-1

REGISTERED LANDSCAPE ARCHITECT NICHOLAS F. DE LORENZO NO.1388 12-31-20 2-3-20 STATE OF CALIFORNIA

DeLorenzo International
Landscape Architecture + Land Planning
3954 Murphy Canyon Road, Suite D-206
San Diego, CA • 92123 • 858-430-6155

February 3, 2020 Job Number: 17-002

DEPARTMENT OF PARKS AND RECREATION
COUNTY OF SAN DIEGO
5500 OVERLAND DRIVE, SUITE 410 SAN DIEGO, CALIFORNIA 92123

COUNTY OF SAN DIEGO PARKS AND RECREATION

NO.	REVISIONS	APPR.	DATE

DESIGNED BY: MS
DRAWN BY: MS/KF
CHECKED BY: ND
PROJECT MANAGER: MS

LAKESIDE EQUESTRIAN FACILITY
LAKESIDE, CALIFORNIA
LANDSCAPE PLAN

SCALE: AS SHOWN
PROJ. NO.: 1020367
FILE NO.:
SHEET 28 OF 34

LANDSCAPE PLANTING LEGEND

Symbol	Botanical Name	Common Name	Qty.	Size	HxW	WUCOLS
	TREES					
	Chilopsis linearis 'Art's Seedless'	Desert Willow	9	24" Box	25' X 15'	VL
	Fraxinus 'Rio Grande'	Fan-Tex Ash	21	36" Box	50' x 30'	M
	Platanus racemosa	California Sycamore	6	36" Box	60' x 30'	M
	Salix lasiolepis	Arroyo Willow	11	15 Gal.	20' X 10'	L
	SHRUBS					
⊗	Abutilon palmeri	Indian Mallow	32	5 Gal.	4' X 4'	L
Ⓒ	Calliandra californica	Baja Fairy Duster	33	5 Gal.	6' X 6'	VL
Ⓘ	Carpenteria californica	Bush Anemone	17	5 Gal.	8' X 8'	L
Ⓔ	Eriogonum fasciculatum	Coast Buckwheat	43	1 Gal.	2' X 4'	VL
⊕	Leucophyllum langmaniae 'Rio Bravo'	Texas Ranger	46	5 Gal.	5' X 5'	L
	ACCENTS					
⊛	Aloe x 'Blue Elf'	Blue Elf Aloe	57	1 Gal.	1.5' X 1.5'	L
⊚	Hesperaloe parviflora	Hesperaloe	118	1 Gal.	3' X 3'	VL
⊛	Yucca pallida	Pale-leaf Yucca	40	1 Gal.	2' X 2'	VL
	GROUND COVER (1 Gallon)					
⊙	Acacia redolens 'Desert Carpet'	Desert Carpet Acacia	49	1 Gal.	2' X 10'	VL
	RETENTION BASIN SLOPE SHRUBS					
◒	Baccharis douglasii	Marsh Baccharis	51	1 Gal.	4' X 4'	L
◔	Distichlis spicata	Salt Grass	71	1 Gal.	2' X 5'	L
◉	Muhlenbergia rigens	Deer Grass	123	1 Gal.	4' X 4'	L

CHANNEL AND RETENTION BASIN SLOPE AND BOTTOM HYDROSEED — L

Scientific Name	Common Name	Bulk Lbs. Per Acre	Min. % PLS*
Agrostis pallens	San Diego bentgrass	5.00	85
Deschampsia danthonoides	Annual hairgrass	1.00	80
Elymus triticoides 'Rio'	Creeping wild rye	4.00	75
Eschscholzia californica	California poppy	2.00	80
Festuca microstachys	Small fescue	18.00	80
Hordeum brachyantherum	Meadow barley	6.00	80
Lupinus nanus	Sky lupine	2.00	80
Sisyrinchium bellum	Blue-eyed grass	1.00	80
		39.00	

COBBLE - 3" - 5" MEXICAN SUNBURST COBBLE BY SOUTHWEST BOULDER & STONE ,CONTACT (619) 331-3120 APPLY OVER MIRAFI MSCAPE FABRIC OR APPROVED EQUAL PER DETAIL B/LP-2, CUT TO FIT SPECIFIED AREAS.

ORGANIC MULCH - ALL SHRUB AREAS EVEN WHEN NOT SHOWN, EXCLUDING BIORETENTION BASINS, COBBLE AREAS AND SLOPES OVER 3:1 SHALL RECEIVE A 3-INCH LAYER OF AGRISERVICE COMPOSTED ORCHARD MULCH OR APPROVED EQUAL.

DECORATIVE BOULDERS - 108 COUNT, 25% 1' - 2', 25% 2' - 3', 50% 3' - 4', BAJA CRESTA BY SOUTHWEST BOULDER & STONE, CONTACT (619) 331-3120. PARTIALLY BURY BOLDERS PER DETAIL A/LP-2.

ROOT CONTROL BARRIER - DEEP ROOT UB-24-2 OR APPROVED EQUAL FOR ALL TREES WITHIN 10' OF PAVEMENTS OR STRUCTURES. CONTACT DEEP ROOT (800) 458-7998 OR WWW.DEEPROOT.COM,.

NOTES FOR HYDROSEEDING

I. HYDROSEEDING MIXTURES AND RATES OF APPLICATION

PER PLANTING LEGEND ABOVE

II. HYDROSEEDING SUSPENSION OR SLURRY COMPOSITION

GREEN WOOD MULCH (LBS./AC.) 2,250.0
FERTILIZER (16-16-16) (LBS./AC.) 400.0
AZ-TAC BINDER (LBS./AC.) 150.0
FERROUS SULFATE OR IRON CHELATE (GALS./AC.) 2.8

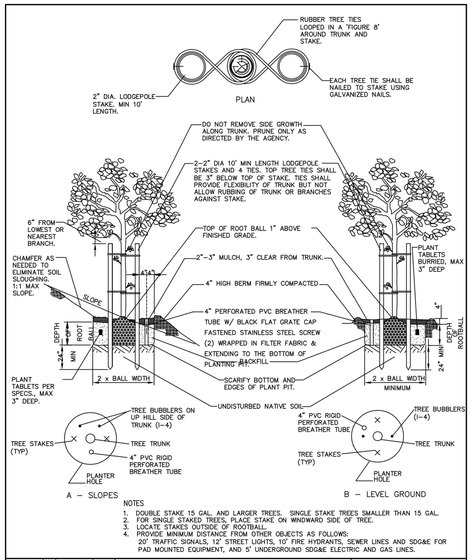

NOTES
1. DOUBLE STAKE 15 GAL. AND LARGER TREES. SINGLE STAKE TREES SMALLER THAN 15 GAL.
2. FOR SINGLE STAKED TREES, PLACE STAKE ON WINDWARD SIDE OF TREE.
3. LOCATE STAKES OUTSIDE OF ROOTBALL.
4. PROVIDE MINIMUM DISTANCE FROM OTHER OBJECTS AS FOLLOWS: 20' TRAFFIC SIGNALS, 12' STREET LIGHTS, 10' FIRE HYDRANTS, SEWER LINES AND SDG&E FOR PAD MOUNTED EQUIPMENT, AND 5' UNDERGROUND SDG&E ELECTRIC AND GAS LINES.

Revision	By	Approved	Date
ORIGINAL		Kercheval	12/75
Add Metric		T. Stanton	03/03
Update		M. Caro	02/05
Delete Metric	SJG	N. Batta	06/11
Reviewed	HM	T. Stanton	10/15

SAN DIEGO REGIONAL STANDARD DRAWING

TREE PLANTING AND STAKING

RECOMMENDED BY THE SAN DIEGO REGIONAL STANDARDS COMMITTEE
Chairperson R.C.E. 19246 Date 12/17/2015
DRAWING NUMBER L-01

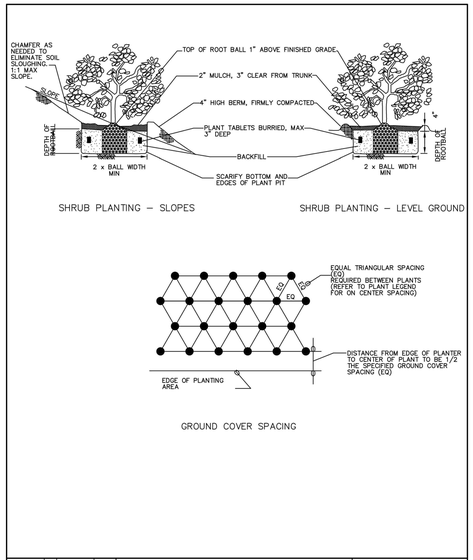

Revision	By	Approved	Date
ORIGINAL		Kercheval	12/75
Add Metric		T. Stanton	03/03
Update		M. Caro	02/05
Delete Metric	KA	N. Batta	06/11
Reviewed	HM	T. Stanton	10/15

SAN DIEGO REGIONAL STANDARD DRAWING

SHRUB PLANTING/GROUND COVER SPACING

RECOMMENDED BY THE SAN DIEGO REGIONAL STANDARDS COMMITTEE
Chairperson R.C.E. 19246 Date 12/17/2015
DRAWING NUMBER L-02

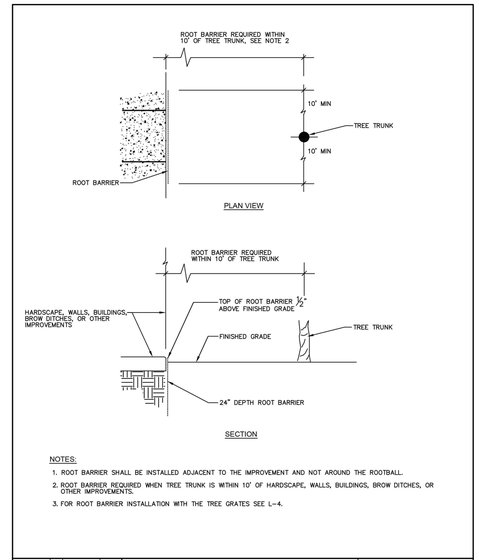

NOTES:
1. ROOT BARRIER SHALL BE INSTALLED ADJACENT TO THE IMPROVEMENT AND NOT AROUND THE ROOTBALL.
2. ROOT BARRIER REQUIRED WHEN TREE TRUNK IS WITHIN 10' OF HARDSCAPE, WALLS, BUILDINGS, BROW DITCHES, OR OTHER IMPROVEMENTS.
3. FOR ROOT BARRIER INSTALLATION WITH THE TREE GRATES SEE L-4.

Revision	By	Approved	Date
ORIGINAL		M. Caro	02/06
Add Metric		T. Stanton	03/03
Delete Metric	KA	N. Batta	06/11
Reviewed	HM	T. Stanton	10/15

SAN DIEGO REGIONAL STANDARD DRAWING

ROOT CONTROL BARRIER

RECOMMENDED BY THE SAN DIEGO REGIONAL STANDARDS COMMITTEE
Chairperson R.C.E. 19246 Date 12/17/2015
DRAWING NUMBER L-06

1. BOULDERS SHALL BE BURIED 1/4 TO 1/3. BOULDER SIZE PER LEGEND ON THIS SHEET.
2. 3" BARK MULCH, COBBLE OR DECOMPOSED GRANITE PER PLAN.
3. COMPACTED OR NATIVE SUB-GRADE PER PLAN.

A DECORATIVE BOULDER PLACEMENT
NO SCALE

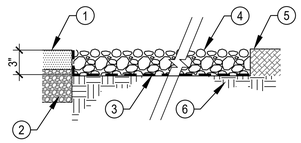

1. CURB OR EDGE OF PAVEMENT.
2. PAVEMENT BASE MATERIAL.
3. WEED BARRIER OR FILTER FABRIC, MIRAFI 140N OR APPROVED EQUAL. CUT TO FIT SPECIFIED AREA.
4. MIN. 3" COBBLE AND PEBBLE MULCH PER LEGEND THIS SHEET.
5. 3" BARK MULCH LAYER IN LANDSCAPE AREA.
6. COMPACTED AND APPROVED SUBGRADE PER GEOTECHNICAL REPORT.

B COBBLE MULCH
NO SCALE

LP-2

LICENSED LANDSCAPE ARCHITECT — NICHOLAS F. DE LORENZO — NO. 1388 — 12-31-22 — 2-3-20 — STATE OF CALIFORNIA

DeLorenzo International
Landscape Architecture + Land Planning
3954 Murphy Canyon Road, Suite D-206
San Diego, CA • 92123 • 858-430-6155

February 3, 2020 Job Number: 17-002

DEPARTMENT OF PARKS AND RECREATION
COUNTY OF SAN DIEGO
5500 OVERLAND DRIVE, SUITE 410 SAN DIEGO, CALIFORNIA 92123

COUNTY OF SAN DIEGO PARKS AND RECREATION

NO.	REVISIONS	APPR.	DATE

DESIGNED BY: MS
DRAWN BY: MS/KF
CHECKED BY: ND
PROJECT MANAGER: MS

LAKESIDE EQUESTRIAN FACILITY
LAKESIDE, CALIFORNIA
PLANT LEGEND AND DETAILS

SCALE AS SHOWN
PROJ. NO. 1020367
FILE NO.
SHEET 29 OF 34

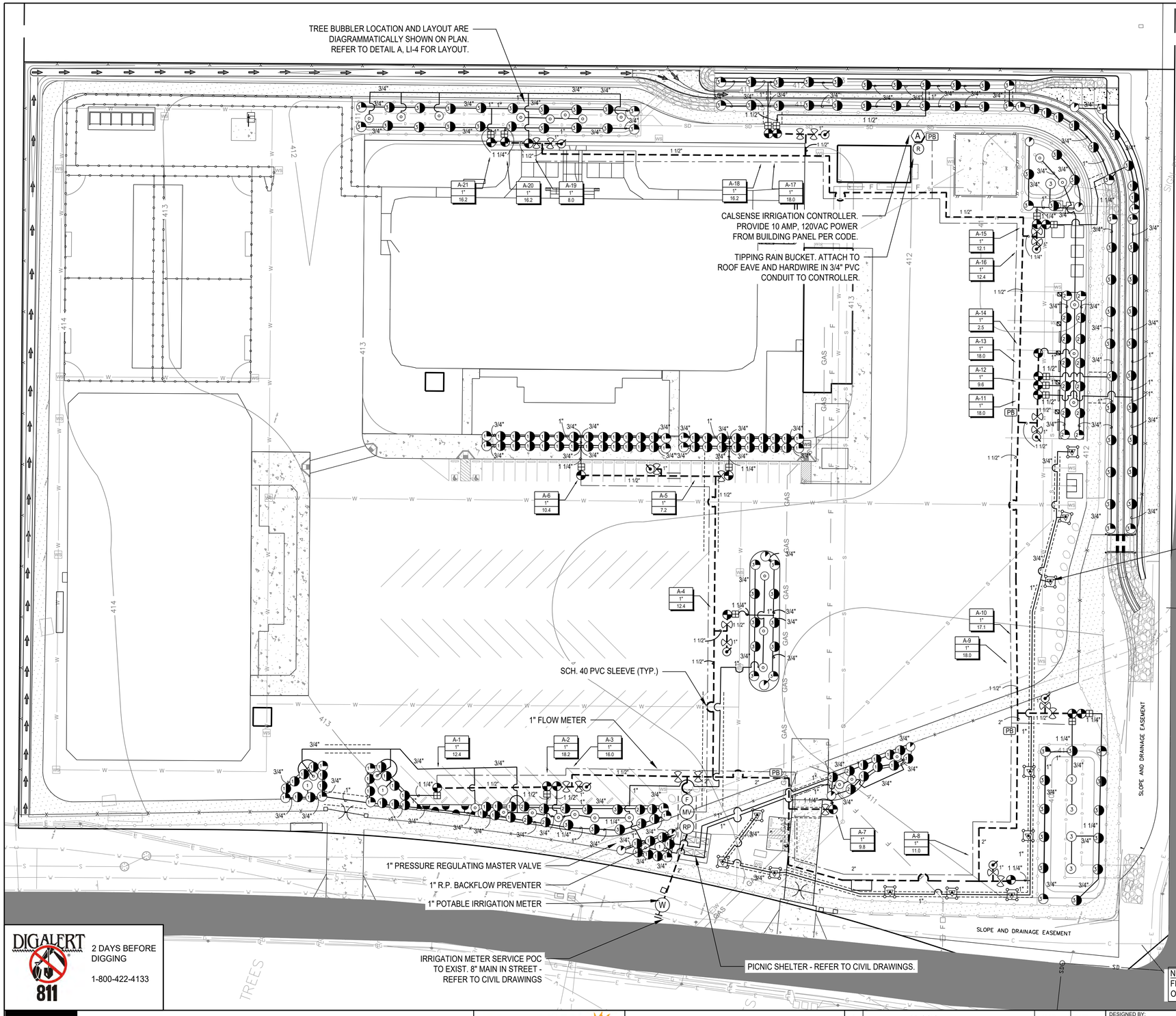

IRRIGATION GENERAL NOTES

1. THE WORK ON THESE PLANS IS DIAGRAMMATIC. ALL ITEMS (I.E. CONTROLLERS, BACKFLOW, VALVES, MAINLINES, SLEEVES, WIRES, IRRIGATION HEADS, ETC.) ARE SHOWN IN THEIR APPROXIMATE LOCATIONS ONLY AND SHALL BE INSTALLED IN PLANTING AREAS, TYPICAL.
2. THE CONTRACTOR SHALL NOT LOCATE ANY ITEMS WHERE THERE MAY BE A CONFLICT WITH UTILITIES, STRUCTURES, OTHER IMPROVEMENTS, OR VEHICULAR OR PEDESTRIAN SAFETY CONSIDERATIONS.
3. THE CONTRACTOR SHALL NOT LOCATE ANY ITEMS IN HARDSCAPE OR PAVING AREAS WITHOUT PRIOR REVIEW AND APPROVAL BY LANDSCAPE ARCHITECT AND COUNTY PROJECT MANAGER.
4. CONTRACTOR SHALL PROVIDE FIELD VERIFIED LOCATIONS OF PROPOSED IRRIGATION EQUIPMENT INCLUDING WATER METER, BACKFLOW, MASTER VALVE, FLOW SENSOR, QUICK COUPLERS, REMOTE CONTROL VALVES AND OTHER ABOVE GROUND OR VISIBLE EQUIPMENT TO LANDSCAPE ARCHITECT AND COUNTY PROJECT MANAGER FOR REVIEW AND APPROVAL PRIOR TO PURCHASING OR INSTALLING EQUIPMENT.
5. PIPING SHALL BE LOCATED THROUGH LANDSCAPE AREAS TO THE GREATEST EXTENT POSSIBLE. PIPING AND WIRES SHALL BE LOCATED IN SCH. 40 PVC SLEEVES AS SHOWN AND WHEN CROSSING UNDER CONCRETE OR ASPHALT PAVEMENTS, OR IN OTHER AREAS WHERE VEHICULAR TRAFFIC IS POSSIBLE. SLEEVES ARE NOT REQUIRED IN EARTH OR DG PAVED PEDESTRIAN-ONLY AREAS.
6. IRRIGATION P.O.C. BACKFLOW PREVENTER, PRESSURE REGULATING VALVE, MASTER VALVE AND FLOW SENSOR TO BE LOCATED IN ADJACENT LANDSCAPE AREA AND PROTECTED FROM VEHICULAR AND EQUESTRIAN TRAFFIC.
7. IRRIGATION EQUIPMENT AND VALVE BOXES SHALL BE LOCATED IN LANDSCAPE AREAS AWAY FROM VEHICULAR AND EQUESTRIAN TRAFFIC.
8. ALL CONTROL WIRE TO BE IN SCH. 40 PVC CONDUIT WITH SWEEPS. NO DIRECT BURIAL CONTROL WIRE.

NOTE:
SEE SHEET LI-2 FOR IRRIGATION LEGEND.
SEE SHEETS LI-2, 3, 4, 5 FOR IRRIGATION DETAILS.
SEE SHEET LI-4 FOR IRRIGATION CALCULATIONS.

0 20 40 80
SCALE: 1" = 40'-0"

LI-1

AVAILABLE PRESSURE: 110 PSI

NOTE:
FIELD ADJUST ALL SPRINKLERS TO ELIMINATE OVERSPRAY ONTO PAVEMENTS OR STRUCTURES.

DIGALERT 811
2 DAYS BEFORE DIGGING
1-800-422-4133

LICENSED LANDSCAPE ARCHITECT NO.1388 NICHOLAS F. DE LORENZO 12-31-20 2-3-20 STATE OF CALIFORNIA

DeLorenzo International
Landscape Architecture + Land Planning
3954 Murphy Canyon Road, Suite D-206
San Diego, CA • 92123 • 858-430-6155

February 3, 2020 Job Number: 17-002

DEPARTMENT OF PARKS AND RECREATION
COUNTY OF SAN DIEGO
5500 OVERLAND DRIVE, SUITE 410 SAN DIEGO, CALIFORNIA 92123

COUNTY OF SAN DIEGO PARKS AND RECREATION

NO.	REVISIONS	APPR.	DATE

DESIGNED BY: MS
DRAWN BY: MS/KF
CHECKED BY: ND
PROJECT MANAGER: MS

LAKESIDE EQUESTRIAN FACILITY
LAKESIDE, CALIFORNIA
IRRIGATION PLAN

SCALE: AS SHOWN
PROJ. NO. 1020367
FILE NO.
SHEET 30 OF 34

IRRIGATION SYMBOL LEGEND

SYMBOL	DESCRIPTION	DETAIL
W	1-INCH DOMESTIC IRRIGATION METER, REFER TO CIVIL DRAWINGS	N/A
RP	IRRIGATION REDUCED PRESSURE PRINCIPLE BACKFLOW ASSEMBLY, FEBCO LF825YA-QT-RP, 1-INCH	LI-3/WR-01
F	FLOW SENSOR - CALSENSE MODEL CS3-FM-1B, 1-INCH	LI-3/I-09
MV	MASTER VALVE - GRISWOLD 2250H PRESSURE REDUCING AND SURGE ANTICIPATING VALVE, 1" SIZE	LI-3/I-10
PB	CONTROL WIRE PULL BOX AT 250' ON CENTER FROM CONTROLLER, CONCRETE WITH LOCKING LID	LI-4/I-15
	PRESSURE REDUCING REMOTE CONTROL VALVE - RAIN BIRD 100 EFB-CP-PRS-D	LI-3/I-14 & I-33
	BASKET FILTER FOR MP ROTATOR SYSTEMS - RAIN BIRD QKCHK-100M	LI-3/A
NOT SHOWN	IN-LINE ADJUSTABLE SPRING CHECK VALVE (WHERE REQ'D) - NDS 1200 SERIES W/SCH.40 NIPPLE AND UNION IN 6" PLASTIC BOX	MANUF. DETAIL
	BRONZE GLOBE VALVE, 200 PSI, LINE SIZE, 1-INCH TO 2-INCH MAINLINE SIZES	LI-3/I-11
A	IRRIG.CONTROLLER - CALSENSE CS3-24-S/CS3-GR-KIT/CS3-W-KIT/RB-1/FM 1B, IN FACTORY FLIP-TOP PEDESTAL	LI-3/I-17
R	RAIN SENSOR - HUNTER MINI-CLIK MOUNTED ON ROOF EAVE, DIRECT WIRED TO CONTROLLER IN 1/2" SCH. 40 CONDUIT	MANUF. DETAIL
	POTABLE QUICK COUPLER - RAIN BIRD 44LRC, REFER TO CIVIL PLANS FOR POTABLE WATER LINE	LI-3/I-05
	PRESSURE MAINLINE - 1" - 1 1/2" SCHEDULE 40 PVC, 2" - 3" CLASS 315 PVC, ALL PIPE AND FITTINGS COLORED WHITE	LI-4/I-25
	NON-PRESSURE LATERAL LINES - 3/4" - 1 1/2" SCHEDULE 40 PVC, ALL PIPE AND FITTINGS COLORED WHITE	LI-4/I-25
	SLEEVES - TWICE THE DIAMETER OF THE WORKING PIPE SCHEDULE 40 PVC, ALL PIPE AND FITTINGS COLORED WHITE	LI-3/I-25
	CONTROL WIRES AND SPARES IN SCH. 40 PCV SLEEVE WITH SWEEPS, SIZE TWICE THE DIAMETER OF THE WIRE BUNDLE	LI-4/I-16
NOT SHOWN	STAINLESS STEEL BACKFLOW ENCLOSURE - STRONG BOX SMOOTH TOUCH SBBC-XXSS, SIZE TO FIT FINAL BACKFLOW PREVENTER CONFIGURATION	LI-2/WR-01
NOT SHOWN	ALL VALVE BOXES TO RECEIVE 23 GA. #4 MESH GALV. FABRIC GOPHER BARRIER. WRAP BARRIER UP SIDE OF BOX 6 INCHES MINIMUM.	

A-1	Controller Station Number
1-1/2"	Remote Control Valve Size
XX.X	Gallons Per Minute (Flow)

PIPE SIZING LEGEND - MAXIMUM ALLOWABLE FLOW*

PIPE SIZE (INCHES)	SCHEDULE 40 NON-PRESSURE LATERAL**	PRESSURE MAINLINE	
		SCH 40 (1" - 1-1/2")	CL. 315 (2" - 3")
3/4"	0 - 7	-	-
1"	8 - 12	0 - 12	-
1 1/4"	13 - 22	13 - 22	-
1 1/2"	23 - 30	23 - 30	-
2"	31 - 50	31 - 50	-
2 1/2"	51 - 70	-	51 - 70
3"	-	-	71 - 100
4"	-	-	101 - 170

* MAXIMUM ALLOWABLE FLOW FOR VELOCITY BELOW 5 FEET PER SECOND DOES NOT IMPLY ASSOCIATED FRICTION / PRESSURE LOSSES ACCEPTABLE IN A GIVEN CONDITION.
** MINIMUM LATERAL SIZE 3/4" EXCEPT FOR I-25 ROTOR LINES WHICH SHALL BE MINIMUM 1" SIZE.

LEGEND FOR SHRUB MP ROTATORS

Symbol	Pop-Up	SHRUB HIGH POP-UP ROTOR Model	PSI	Pattern	Flow	Details
	12"	HUNTER PROS-12-PRS40-CV-MPLCSS15	40	5'X15'	.22	LI-4 / I-03
	12"	HUNTER PROS-12-PRS40-CV-MPRCSS15		5'X15'	.22	
	12"	HUNTER PROS-12-PRS40-CV-MPSS530		5'X30'	.44	

Symbol	Pop-Up	SHRUB HIGH POP-UP ROTOR Model	PSI	Radius	Flow	Details
	12"	HUNTER PROS-12-PRS40-CV-MPCORNER	40	14'	.19	LI-4 / I-03
	12"	HUNTER PROS-12-PRS40-CV-MPCORNER		14'	.39	
	12"	HUNTER PROS-12-PRS40-CV-MPCORNER		14'	.45	

Symbol	Pop-Up	SHRUB HIGH POP-UP ROTOR Model	PSI	Radius	Flow	Details
	12"	HUNTER PROS-12-PRS40-CV-MP1000-90	40	11'-14'	.19	LI-4 / I-03
1	12"	HUNTER PROS-12-PRS40-CV-MP10000-90		11'-14'	.37	
2	12"	HUNTER PROS-12-PRS40-CV-MP1000-210		11'-14'	.43	
4	12"	HUNTER PROS-12-PRS40-CV-MP1000-210		11'-14'	.57	
1	12"	HUNTER PROS-12-PRS40-CV-MP1000-360		11'-14'	.75	
	12"	HUNTER PROS-12-PRS40-CV-MP2000-90		16'-20'	.40	
2	12"	HUNTER PROS-12-PRS40-CV-MP20000-90		15'-19'	.74	
2	12"	HUNTER PROS-12-PRS40-CV-MP2000-210		15'-19'	.86	
4	12"	HUNTER PROS-12-PRS40-CV-MP2000-210		15'-19'	1.10	
2	12"	HUNTER PROS-12-PRS40-CV-MP2000-360		15'-19'	1.47	
	12"	HUNTER PROS-12-PRS40-CV-MP3000-90		24'-30'	.86	
3	12"	HUNTER PROS-12-PRS40-CV-MP30000-90		24'-30'	1.82	
3	12"	HUNTER PROS-12-PRS40-CV-MP3000-210		24'-30'	2.12	
4	12"	HUNTER PROS-12-PRS40-CV-MP3000-210		24'-30'	2.73	
3	12"	HUNTER PROS-12-PRS40-CV-MP3000-360		24'-30'	3.64	
	12"	HUNTER PROS-12-PRS40-CV-MP3500-90		24'-30'	.86	
4	12"	HUNTER PROS-12-PRS40-CV-MP3500-90		24'-30'	1.82	
4	12"	HUNTER PROS-12-PRS40-CV-MP3500-90		24'-30'	2.12	

LEGEND FOR TREE BUBBLERS

		PSI	Flow Each	Flow Per Tree	Details
	HUNTER AFB IN PERF. PIPE, 4 PER TREE IN DG AREAS ONLY	30	0.25	1.0	LI-4/I-04
	HUNTER PROS-06-PRS30-CV-50H, 2 PER TREE	30	0.50	1.00	LI-4/I-03

LI-2

DeLorenzo International
Landscape Architecture + Land Planning
3954 Murphy Canyon Road, Suite D-206
San Diego, CA • 92123 • 858-430-6155

February 3, 2020 Job Number: 17-002

DEPARTMENT OF PARKS AND RECREATION
COUNTY OF SAN DIEGO
5500 OVERLAND DRIVE, SUITE 410 SAN DIEGO, CALIFORNIA 92123

NO.	REVISIONS	APPR.	DATE

DESIGNED BY: MS
DRAWN BY: MS/KF
CHECKED BY: ND
PROJECT MANAGER: MS

LAKESIDE EQUESTRIAN FACILITY
LAKESIDE, CALIFORNIA
IRRIGATION LEGENDS

SCALE: AS SHOWN
PROJ. NO.: 1020367
FILE NO.:
SHEET 31 OF 34

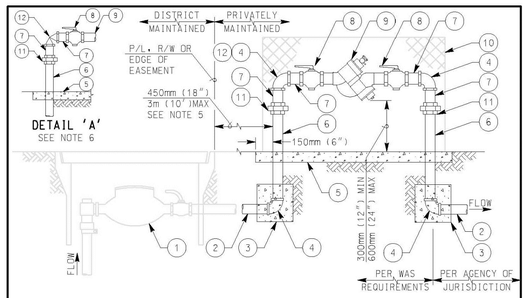

NOTES:
1) REFER TO SECTION 15112 OF THE SPECIFICATIONS
2) INSTALL WARNING/IDENTIFICATION TAPE AS SHOWN ON WP-01
3) LOCATE BACKFLOW PREVENTION DEVICE (BPD) IN SUCH A MANNER THAT WILL ALLOW THE DEVICE TO BE READILY ACCESSIBLE FOR INSPECTION & REPAIR
4) ALL ABOVE GROUND PIPING, UNIONS, ELBOWS, & NIPPLES SHALL BE SOLDERED OR THREADED BRASS
5) NO CONNECTIONS OF ANY KIND WILL BE ALLOWED IN THIS AREA. INSPECTION BY THE DISTRICT SHALL TAKE PLACE PRIOR TO BACKFILL. INSTALL A CASING ENCASED IN CONCRETE WHEN THE DISTANCE BETWEEN THE METER BOX AND THE RISER TO THE BPD EXCEEDS 450mm (18").
6) INSTALL AN ANGLE PRESSURE REDUCING VALVE IN LIEU OF THE FIRST 90° ELL WHEN SYSTEM PRESSURE EXCEEDS 1.03 MPa (150 PSI) OR WHEN RECOMMENDED BY THE BACKFLOW MANUFACTURER
7) TESTING SHALL BE CONDUCTED IN ACCORDANCE WITH SECTION 15112 OF THE SPECIFICATIONS PRIOR TO ACCEPTANCE BY THE DISTRICT
8) BPD & APPURTENANCES INSTALLED FOR THE USE OF RECYCLED WATER SHALL BE IDENTIFIED AS DESCRIBED IN SECTION 15151 OF THE SPECIFICATIONS
9) MATERIALS SHALL BE SELECTED FROM THE APPROVED MATERIALS LIST

RP W
RP RW
LEGEND ON PLANS

ITEM NO	SIZE AND DESCRIPTION	ITEM NO	SIZE AND DESCRIPTION
1	METER BOX & METER ASSEMBLY	6	BRASS OR COPPER PIPE SEE NOTE 4
	SEE WS-01 & WS-02	7	75mm (3") LONG NIPPLE SEE NOTE 4
2	SCH 80 PVC, BRASS OR COPPER PIPE	8	BALL VALVE "SHUT-OFF"
3	CONCRETE THRUST BLOCK SEE WT-01	9	REDUCED PRESSURE BACKFLOW DEVICE
4	90° ELL SEE NOTES 4 & 6	10	ENCLOSURE ~~OPTIONAL~~ PER LEGEND
5	CONCRETE SLAB, MINIMUM 100mm (4") THICK x 450mm (18") WIDE	11	UNION SEE NOTE 4
		12	ANGLE PRV SEE NOTES 4 & 6

19mm THRU 50mm (¾" THRU 2") REDUCED PRESSURE BACKFLOW PREVENTION DEVICE

WATER AGENCIES STANDARDS
COMMITTEE APPROVAL: 02/01/2008
DRAWING NUMBER: WR-01

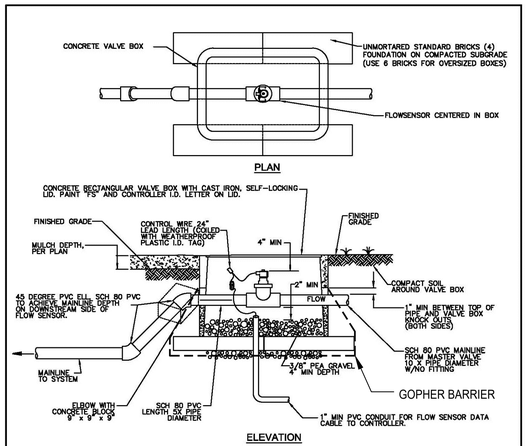

NOTES:
1. SPLICES SHALL BE SOLDERED WITH A PROPERLY SET MECHANICAL SPLICE CONNECTOR, ENTIRELY ENCLOSED IN SELF-CURING RESIN AND SHALL BE COMPLETELY WATER-PROOF.
2. SEAL CONDUIT OPENINGS WITH ELECTRICAL SEALANT.
3. KNOCK OUTS SHALL NOT BE ENLARGED.
4. INSTALL ONLY ONE FLOW SENSOR PER BOX.
5. VALVE BOXES SHALL BE SET PERPENDICULAR TO HARDSCAPE PER MULCH DEPTH IN SHRUB / GROUNDCOVER AREAS. IF NECESSARY TO BE SET IN TURF, VALVE BOXES SHALL BE SET FLUSH WITH FINISHED GRADE.

Revision	By	Approved	Date
ORIGINAL	KA	N. Batta	11/11
Reviewed	KA	N. Batta	10/15

SAN DIEGO REGIONAL STANDARD DRAWING

FLOW SENSOR

RECOMMENDED BY THE SAN DIEGO REGIONAL STANDARDS COMMITTEE
Chairperson R.C.E. 19246 Date 12/17/2015
DRAWING NUMBER I-09

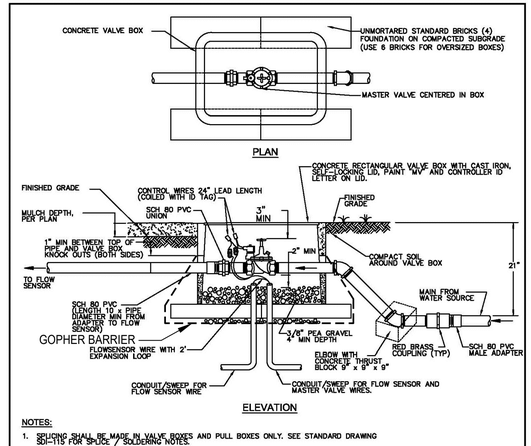

NOTES:
1. SPLICING SHALL BE MADE IN VALVE BOXES AND PULL BOXES ONLY. SEE STANDARD DRAWING SDI-115 FOR SPLICE / SOLDERING NOTES.
2. SPLICES SHALL BE SOLDERED WITH A PROPERLY SET MECHANICAL SPLICE CONNECTOR, ENTIRELY ENCLOSED IN SELF-CURING RESIN AND SHALL BE COMPLETELY WATER-PROOF.
3. SEAL CONDUIT OPENINGS WITH ELECTRICAL CONDUIT SEALANT AS APPROVED BY THE AGENCY.
4. PVC CONDUIT SHALL BE 1" MINIMUM.
5. VALVE / CONTROLLER IDENTIFICATION SHALL BE LABELED OUTSIDE ON THE VALVE BOX LID AND TAGGED INSIDE THE BOX ON THE VALVE.
6. KNOCK OUTS SHALL NOT BE ENLARGED.
7. INSTALL ONLY ONE VALVE PER BOX.
8. VALVE BOXES SHALL BE SET PERPENDICULAR TO HARDSCAPE, ABOVE FINISHED GRADE IN SHRUB / GROUNDCOVER AREAS, PER MULCH DEPTH. IF NECESSARY TO BE SET IN TURF, VALVE BOXES SHALL BE SET FLUSH WITH FINISHED GRADE.
9. CLOSE NIPPLES SHALL NOT BE USED.
10. NIPPLES, ELBOWS, AND FITINGS SHALL BE THREADED RED BRASS, FROM COUPLING THROUGH THE MASTER VALVE. PIPE AND FITTINGS DOWNSTREAM SHALL BE SCH 80 PVC.
11. TEFLON TAPE SHALL BE USED ON THREADED CONNECTOR.

Revision	By	Approved	Date
ORIGINAL		Kercheval	12/75
Add Metric		T. Stanton	03/03
Update		M. Caro	04/05
Delete Metric	KA	N. Batta	11/11
Reviewed	KA	N. Batta	10/15

SAN DIEGO REGIONAL STANDARD DRAWING

IRRIGATION MASTER VALVE

RECOMMENDED BY THE SAN DIEGO REGIONAL STANDARDS COMMITTEE
Chairperson R.C.E. 19246 Date 12/17/2015
DRAWING NUMBER I-10

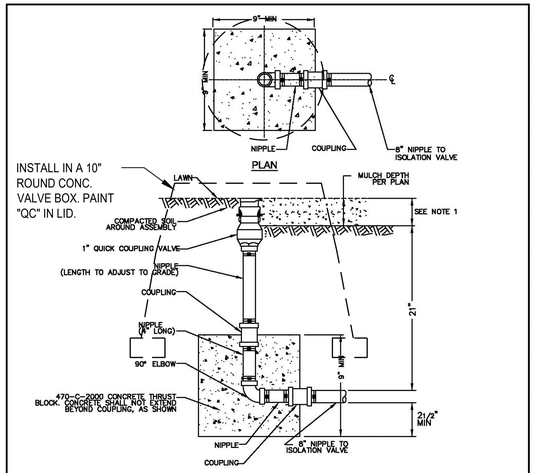

NOTES:
1. QUICK COUPLING VALVES SHALL BE SET FLUSH IN LAWN AND PER MULCH DEPTH ABOVE FINISH GRADE IN SHRUB / GROUNDCOVER AREAS.
2. CLOSE NIPPLES SHALL NOT BE USED.
3. NIPPLES, COUPLINGS, AND ELBOWS SIZE SHALL BE 1" ~~RED BRASS~~ PVC
4. TEFLON TAPE SHALL BE USED ON THREADED CONNECTIONS.
5. UPON PROJECT ACCEPTANCE, THE CONTRACTOR SHALL PROVIDE TWO SETS OF APPROPRIATE QUICK COUPLER VALVE KEY WITH 3' BRASS BALL VALVE AND SWIVEL ADAPTER INCLUDED IN THE ASSEMBLY.
6. INSTALL VALVE BOX PER AGENCY STANDARDS.

Revision	By	Approved	Date
ORIGINAL		Kercheval	12/75
Add Metric		T. Stanton	03/03
Update		M. Caro	05/04
Delete Metric	KA	N. Batta	11/11
Reviewed	KA	N. Batta	10/15

SAN DIEGO REGIONAL STANDARD DRAWING

QUICK COUPLING VALVE

RECOMMENDED BY THE SAN DIEGO REGIONAL STANDARDS COMMITTEE
Chairperson R.C.E. 19246 Date 12/17/2015
DRAWING NUMBER I-05

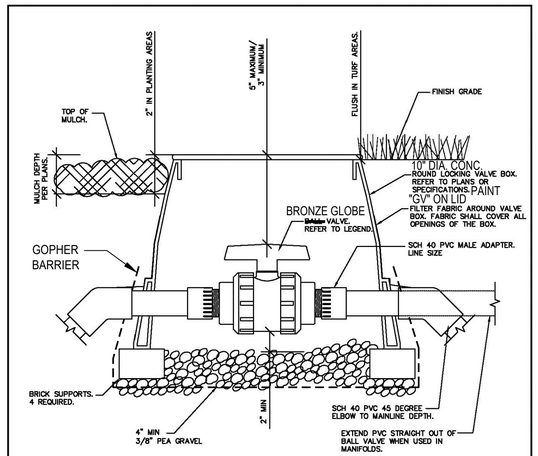

NOTES:
1. TEFLON TAPE, 3/4" WIDE, SHALL BE USED ON ALL THREADED CONNECTIONS
2. CLOSE NIPPLES SHALL NOT BE USED.
3. ALL PVC PIPE USED IN MANIFOLD ASSEMBLIES SHALL BE OF THE SAME CLASS AS SPECIFIED FOR THE MAINLINE.
4. ALL PLASTIC VALVE BOXES SHALL BE HEAT BRANDED WITH THE APPROPRIATE IDENTIFICATION. REFER TO PLANS AND SPECIFICATIONS.
5. DO NOT CUT ADDITIONAL HOLES IN VALVES BOXES.
6. ADD SINGLE UNIONS ON EACH SIDE OF VALVE WHEN TRUE UNION BALL VALVES ARE NOT USED.

Revision	By	Approved	Date
ORIGINAL		Kercheval	12/75
Add Metric		T. Stanton	03/03
Update		M. Caro	02/05
Delete Metric	KA	N. Batta	11/11
Reviewed	KA	N. Batta	10/15

SAN DIEGO REGIONAL STANDARD DRAWING

ISOLATION BALL VALVE 2" AND SMALLER

RECOMMENDED BY THE SAN DIEGO REGIONAL STANDARDS COMMITTEE
Chairperson R.C.E. 19246 Date 12/17/2015
DRAWING NUMBER I-11

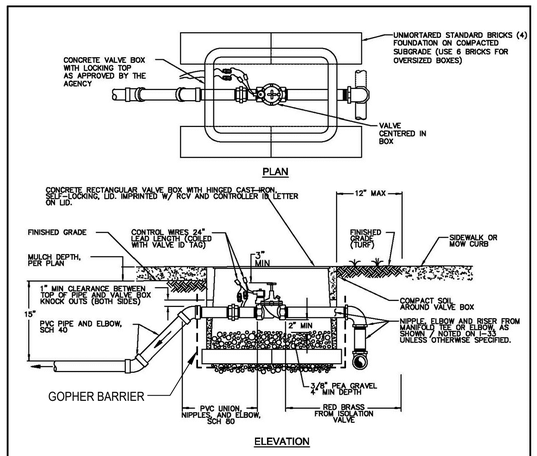

NOTES:
1. SPLICING SHALL BE MADE IN VALVE BOXES AND PULL BOXES ONLY. SEE I-15 FOR SPLICE /SOLDERING NOTES.
2. SPLICES SHALL BE SOLDERED WITH A PROPERLY SET MECHANICAL SPLICE CONNECTOR, ENTIRELY ENCLOSED IN SELF-CURING RESIN AND SHALL BE COMPLETELY WATER-PROOF.
3. KNOCK OUTS SHALL NOT BE ENLARGED.
4. INSTALL ONLY ONE VALVE PER BOX.
5. VALVE BOXES SHALL BE SET PERPENDICULAR TO HARDSCAPE, ABOVE FINISHED GRADE IN SHRUB / GROUNDCOVER AREAS, PER MULCH DEPTH. IF NECESSARY TO BE SET IN TURF, VALVE BOXES SHALL BE SET FLUSH WITH FINISHED GRADE.
6. CLOSE NIPPLES SHALL NOT BE USED.
7. NIPPLES, ELBOWS, AND FITTINGS SHALL BE THREADED RED BRASS FROM ISOLATION VALVE THROUGH THE VALVE, UNLESS OTHERWISE SPECIFIED.
8. TEFLON TAPE SHALL BE USED ON THREADED CONNECTIONS

Revision	By	Approved	Date
ORIGINAL		R. Munoz	03/97
Add Metric		T. Stanton	03/03
Update		M. Caro	04/05
Delete Metric	KA	N. Batta	11/11
Reviewed	KA	N. Batta	10/15

SAN DIEGO REGIONAL STANDARD DRAWING

REMOTE CONTROL VALVE

RECOMMENDED BY THE SAN DIEGO REGIONAL STANDARDS COMMITTEE
Chairperson R.C.E. 19246 Date 12/17/2015
DRAWING NUMBER I-14

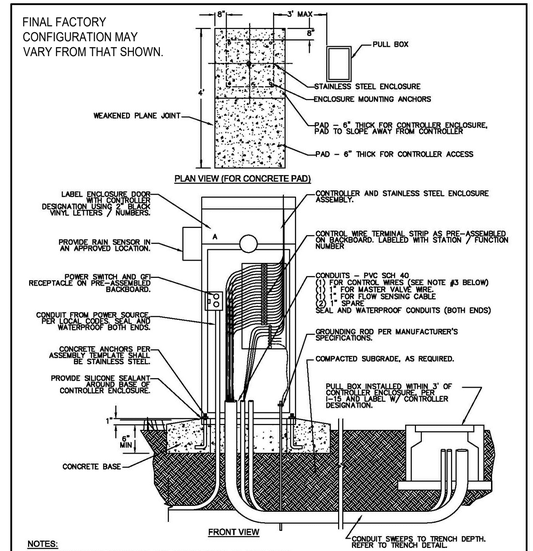

NOTES:
1. ALL CONTROLLER ASSEMBLIES AND OPTIONS SHALL BE COMPLETELY PRE-ASSEMBLED IN A STAINLESS STEEL ENCLOSURE.
2. CONTROL WIRE CONDUIT SHALL BE TWICE THE DIAMETER OF THE WIRE BUNDLE, 2" MINIMUM.
3. PROVIDE SEPARATE CIRCUIT BREAKER FOR CONTROLLER(S) AT ELECTRICAL CONTOL PANEL AND LABEL.
4. SEAL CONDUIT OPENINGS WITH ELECTRICAL SEALANT, AS APPROVED BY THE AGENCY.

Revision	By	Approved	Date
ORIGINAL		Kercheval	12/75
Add Metric		T. Stanton	03/03
Update		M. Caro	05/04
Delete Metric	KA	N. Batta	11/11
Reviewed	KA	N. Batta	10/15

SAN DIEGO REGIONAL STANDARD DRAWING

AUTOMATIC IRRIGATION CONTROLLER PEDESTAL MOUNTED

RECOMMENDED BY THE SAN DIEGO REGIONAL STANDARDS COMMITTEE
Chairperson R.C.E. 19246 Date 12/17/2015
DRAWING NUMBER I-17

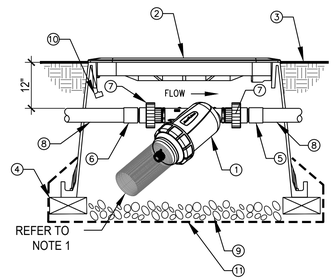

1. 1" RAIN BIRD QUICK CHECK BASKET FILTER
2. CONC. VALVE BOX WITH LOCKING COVER, PAINT "DF" ON LID
3. FINISH GRADE/TOP OF MULCH
4. BRICK (1 OF 4)
5. PVC SCH 40 FEMALE ADAPTER
6. PVC SCH 40 MALE ADAPTER
7. PVC SCH 80 THREADED UNION, ONE EACH SIDE OF FILTER
8. PVC LATERAL PIPE
9. 4" MIN. DEPTH OF 3/8" WASHED PEA GRAVEL
10. RECYCLED WATER WARNING TAG IN ENGLISH AND SPANISH.
11. #4 MESH, GALV, WELDED, 23 GA. FABRIC GOPHER BARRIER, WRAP MIN. 3 INCHES UP VALVE BOX

NOTE:
1. FILTER ASSEMBLY TO BE INSTALLED WITH SCREEN DIRECTION FACING A 45° DOWNWARD ANGLE WITH ENOUGH SPACE TO REMOVE SCREEN FOR MAINTENANCE. SOME APPLICATIONS MAY REQUIRE VALVE BOX EXTENSIONS OR A LARGER BOX TO ACHIEVE ACCEPTABLE SCREEN CLEARANCE.
2. ALL VALVES OPERATING PERMANENT MP ROTATOR SYSTEMS SHALL INCLUDE A 200 MESH BASKET FILTER.

A BASKET FILTER IN VALVE BOX
NO SCALE

LI-3

LICENSED LANDSCAPE ARCHITECT NICHOLAS P. DE LORENZO NO. 1388 12-31-22 Renewal 2-3-20 STATE OF CALIFORNIA

DeLorenzo International
Landscape Architecture + Land Planning
3954 Murphy Canyon Road, Suite D-206
San Diego, CA • 92123 • 858-430-6155

February 3, 2020 Job Number: 17-002

DEPARTMENT OF PARKS AND RECREATION
COUNTY OF SAN DIEGO
5500 OVERLAND DRIVE, SUITE 410 SAN DIEGO, CALIFORNIA 92123

COUNTY OF SAN DIEGO PARKS AND RECREATION

NO.	REVISIONS	APPR.	DATE

DESIGNED BY: MS
DRAWN BY: MS/KF
CHECKED BY: ND
PROJECT MANAGER: MS

LAKESIDE EQUESTRIAN FACILITY
LAKESIDE, CALIFORNIA
IRRIGATION DETAILS

SCALE AS SHOWN
PROJ. NO. 1020367
FILE NO.
SHEET 32 OF 34

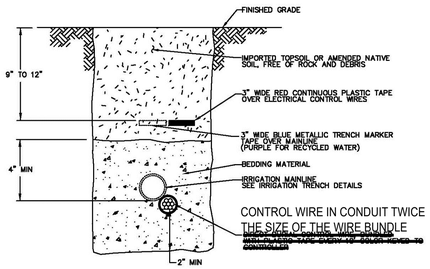

NOTES:

1. BEDDING MATERIAL SHALL BE SE 50 PLASTER OR MORTAR SAND.
2. WIRES WHICH RUN UNDER PAVED AREAS SHALL BE INSTALLED IN PVC CONDUIT TWICE THE DIAMETER OF THE WIRE BUNDLE (2" MINIMUM SIZE), EXTENDING 12" MINIMUM BEYOND EDGE OF PAVEMENT.
3. THE LETTER E SHALL BE STAMPED OR CHISELED ON THE IMPROVEMENT(CURB-SIDEWALK) DIRECTLY ABOVE THE CONTROL WIRE / CABLE.
4. WHEN CONTROL WIRING CANNOT BE INSTALLED IN A PIPE TRENCH, IT SHALL BE INSTALLED A MINIMUM 18" BELOW FINISH GRADE BUNDLED WITH PLASTIC TAPE.

Revision	By	Approved	Date
ORIGINAL		Kercheval	12/75
Add Metric		T. Stanton	03/03
Update		M. Caro	09/04
Delete Metric	KA	N. Batta	11/11
Reviewed	KA	N. Batta	10/15

SAN DIEGO REGIONAL STANDARD DRAWING

CONTROL WIRE INSTALLATION

RECOMMENDED BY THE SAN DIEGO REGIONAL STANDARDS COMMITTEE

Chairperson R.C.E. 19246 Date 12/17/2015

DRAWING NUMBER **I-16**

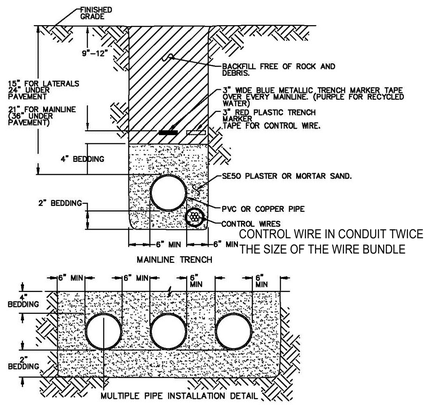

NOTES:

1. BACKFILL MATERIAL SHALL BE COMPACTED TO A RELATIVE COMPACTION OF 90% MINIMUM.
2. PIPE SHALL LAY FREE IN THE TRENCH WITH NO INDUCED STRAIN AND WITH SUFFICIENT ALLOWANCE FOR EXPANSION AND CONTRACTION.
3. PVC PIPE UNDER PAVEMENT SHALL BE INSTALLED IN A SCH 40 PVC SLEEVE TWICE THE DIAMETER OF THE PIPE (2" MINIMUM SIZE) AND EXTEND 12" MINIMUM BEYOND THE EDGE OF PAVEMENT.
4. THE LETTER "W" SHALL BE STAMPED OR CHISELED ON THE IMPROVEMENT (CURB/ SIDEWALK) DIRECTLY ABOVE THE PRESSURE PIPELINE SLEEVE.
5. NO PVC PRESSURE PIPELINE SHALL BE INSTALLED WITHIN 3' OF ANY UTILITY, UNLESS OTHERWISE SPECIFIED.

Revision	By	Approved	Date
ORIGINAL		Kercheval	12/75
Add Metric		T. Stanton	03/03
Update		M. Caro	09/04
Update	KA	N. Batta	11/11
Reviewed	KA	N. Batta	10/15

SAN DIEGO REGIONAL STANDARD DRAWING

IRRIGATION TRENCH PVC OR COPPER PIPE

RECOMMENDED BY THE SAN DIEGO REGIONAL STANDARDS COMMITTEE

Chairperson R.C.E. 19246 Date 12/17/2015

DRAWING NUMBER **I-25**

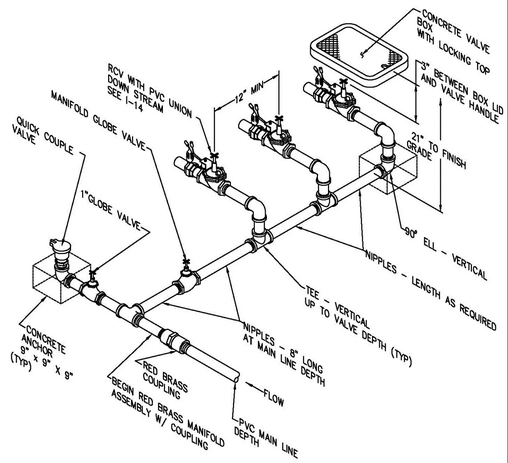

NOTES:

1. ALL PIPES, NIPPLES, AND FITTINGS AFTER MALE ADAPTER SHALL BE RED BRASS.
2. VALVE AND CONTROLLER IDENTIFICATION SHALL BE LABELED OUTSIDE ON THE VALVE BOX LID AND TAGGED INSIDE THE BOX ON THE VALVE.
3. TEFLON TAPE SHALL BE USED ON THREADED CONNECTIONS.

Revision	By	Approved	Date
ORIGINAL		Kercheval	12/75
Add Metric		T. Stanton	03/03
UPDATE		M. Caro	4/05
UPDATE	KA	N. Batta	11/11
Reviewed	KA	N. Batta	10/15

SAN DIEGO REGIONAL STANDARD DRAWING

REMOTE CONTROL VALVE MANIFOLD ASSEMBLY WITH BRASS PIPE

RECOMMENDED BY THE SAN DIEGO REGIONAL STANDARDS COMMITTEE

Chairperson R.C.E. 19246 Date 12/17/2015

DRAWING NUMBER **I-33**

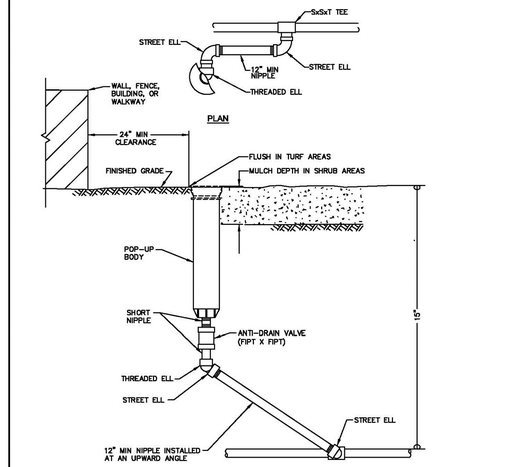

NOTES:

1. FITTINGS SHALL BE PVC SCH 40.
2. NIPPLES AND RISERS SHALL BE PVC SCH 80.
3. TEFLON TAPE SHALL BE USED ON THREADED CONNECTIONS.
4. CLOSE NIPPLES SHALL NOT BE USED.
5. ANTI-DRAIN VALVES SHALL BE INSTALLED UNDER OR IN ALL HEADS.
6. LATERAL DEPTH SHALL BE 18" WHEN 12" POP-UP BODIES ARE USED.

LEGEND ON PLANS

SHOW A NUMBER TO INDICATE TYPE HEAD

Revision	By	Approved	Date
ORIGINAL		Kercheval	12/75
Add Metric		T. Stanton	03/03
Update		M. Caro	09/04
Delete Metric	KA	N. Batta	11/11
Reviewed	KA	N. Batta	10/15

SAN DIEGO REGIONAL STANDARD DRAWING

ROTOR, SPRAY, OR BUBBLER POP-UP HEAD

RECOMMENDED BY THE SAN DIEGO REGIONAL STANDARDS COMMITTEE

Chairperson R.C.E. 19246 Date 12/17/2015

DRAWING NUMBER **I-03**

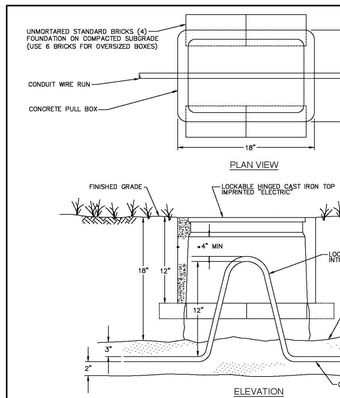

NOTES:

1. INSTALL PULL BOXES AS SHOWN ON PLANS AND AT EACH END OF CONDUITS. SWEEPS RUNNING UNDER VEHICULAR PAVEMENT.
2. PULL BOX COVER SHALL BE PERMANENTLY MARKED "ELECTRIC".
3. CONDUCTORS FOR EACH CONTROLLER CLOCK SHALL BE HARNESSED SEPARATELY AND AT SUFFICIENT INTERVALS TO MAINTAIN A DEFINITE BUNDLE.
4. SPLICES SHALL ONLY BE MADE IN PULL BOXES, WITH A PROPERLY SET MECHANICAL SPLICE CONNECTOR, SOLDERED WITH METALLIC ALLOY, ENTIRELY ENCLOSED IN SELF-CURING RESIN AND SHALL BE COMPLETELY WATER-PROOF.
5. SPARE WIRE ENDS SHALL BE INSULATED IN THE SAME MANNER AS WIRE SPLICES.
6. MINIMUM SIZE PULL BOX SHALL BE AS SHOWN ABOVE. LARGER BOXES MAY BE NECESSARY TO MEET 4" CLEARANCE REQUIRED.
7. NO SPLICES SHALL BE PERMITTED ON WIRE RUNS OF LESS THAN 300'.
8. THE LETTER "E" SHALL BE STAMPED OR CHISELED ON THE IMPROVEMENT (CURB-SIDEWALK) DIRECTLY ABOVE THE CONTROL WIRE.

LEGEND ON PLANS

PB

Revision	By	Approved	Date
ORIGINAL		Kercheval	12/75
Delete Metric	KA	N. Batta	11/11
Reviewed	KA	N. Batta	10/15
Reviewed	EW	T. Stanton	10/18

SAN DIEGO REGIONAL STANDARD DRAWING

ELECTRICAL PULL BOX FOR DIRECT BURIAL CONTROL WIRES AND SPLICING NOTES

RECOMMENDED BY THE SAN DIEGO REGIONAL STANDARDS COMMITTEE

Chairperson R.C.E. 19246 Date 10/29/2018

DRAWING NUMBER I-15

NOTES:

1. DELETE WATERING BASIN.
2. ADJUST BUBBLERS TO 0.25 GPM FLOW.

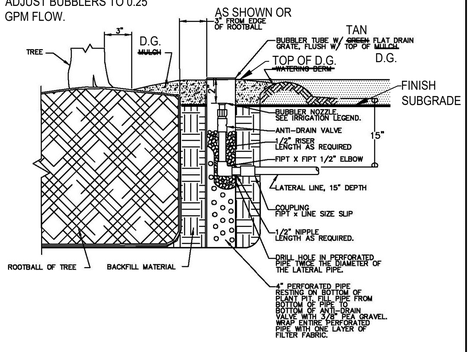

NOTES:

1. FOR BUBBLER LOCATION, REFER TO TREE PLANTING ~~AND STAKING~~ DRAWING.
~~2. EACH TREE SHALL HAVE A 2" POP-UP HEAD WITH BUBBLER NOZZLE PER 1-5 AND A FIXED BUBBLER NOZZLE IN A PERFORATED PIPE.~~
3. NIPPLES AND RISERS SHALL BE PVC SCH 80.
4. FITTINGS SHALL BE PVC SCH 40.
5. TEFLON TAPE SHALL BE USED ON THREADED CONNECTIONS.
6. CLOSE NIPPLES SHALL NOT BE USED.
7. ANTI-DRAIN VALVES SHALL BE INSTALLED UNDER ALL HEADS.

Revision	By	Approved	Date
ORIGINAL		M. CARO	02/05
Update	KA	N. Batta	11/11
Reviewed	KA	N. Batta	10/15

SAN DIEGO REGIONAL STANDARD DRAWING

DEEP ROOT TREE BUBBLER
IN DECOMPOSED GRANITE (D.G.)

RECOMMENDED BY THE SAN DIEGO REGIONAL STANDARDS COMMITTEE

Chairperson R.C.E. 19246 Date 12/17/2015

DRAWING NUMBER **I-04**

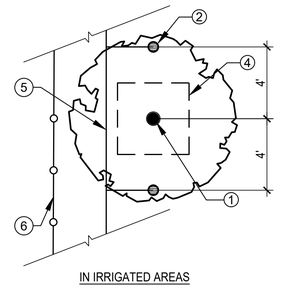

IN IRRIGATED AREAS

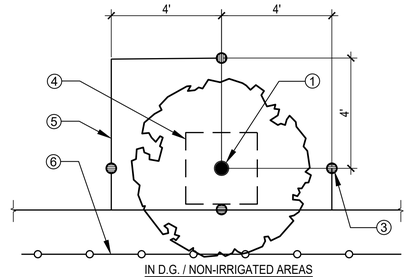

IN D.G. / NON-IRRIGATED AREAS

1. PROPOSED TREE
2. TREE DEEP WATERING DEVICE, 2 PER TREE AS SHOWN.
3. TREE DEEP WATERING DEVICE, 4 PER TREE. ONE AT THE ROOT BALL, THREE 4 FEET OFF THE ROOT BALL.
4. TREE ROOT BALL
5. IRRIGATION LATERAL PER PLANS.
6. FENCE OR EDGING, REFER TO CIVIL DRAWINGS.

A TREE DEEP WATERING DEVICE - LAYOUT

NO SCALE

LI-4

LICENSED LANDSCAPE ARCHITECT NICHOLAS R DE LORENZO NO. 1388 12-31-22 RENEWAL 2-3-20 STATE OF CALIFORNIA

DeLorenzo International
Landscape Architecture + Land Planning
3954 Murphy Canyon Road, Suite D-206
San Diego, CA • 92123 • 858-430-6155

February 3, 2020 Job Number: 17-002

DEPARTMENT OF PARKS AND RECREATION
COUNTY OF SAN DIEGO
5500 OVERLAND DRIVE, SUITE 410 SAN DIEGO, CALIFORNIA 92123

COUNTY OF SAN DIEGO PARKS AND RECREATION

NO.	REVISIONS	APPR.	DATE

DESIGNED BY: MS
DRAWN BY: MS/KF
CHECKED BY: ND
PROJECT MANAGER: MS

LAKESIDE EQUESTRIAN FACILITY
LAKESIDE, CALIFORNIA
IRRIGATION DETAILS

SCALE AS SHOWN
PROJ. NO. 1020367
FILE NO.
SHEET 33 OF 34

IRRIGATION PRESSURE LOSS CALCULATIONS

Project: Lakeside Equestrian
Location: Lakeside, California
Date: January 29, 2020
Job No.: 17-002
By: Fukuyama

Control Valve No.: A-13 **GPM:** 18.0 **Size:** 1"

A. SYSTEM HEAD GAIN OR LOSS

Static Pressure at Meter (per Lakeside Water District)	**110**
Elevation at Meter	412
Elevation at Highest Head	412
Head Gain/Loss to Highest head (Elev. Diff. x 0.433)	0.0
TOTAL SYSTEM PRESSURE	**110.0**

B. PIPING LOSS

SECTION	TYPE	SIZE	LENGTH	ACCUM. GPM	LOSS IN PSI
Mainlines					
1	SCH 40	2"	585	18.0	1.6
2	SCH 40	1-1/2"	293	18.0	2.8
Lateral Lines					
1	SCH 40	1-1/2"	10	18.0	0.1
2	SCH 40	1	80	9.9	2.1
2	SCH 40	1	80	8.1	1.4
3	SCH 40	3/4"	80	6.3	3.0
3	SCH 40	3/4"	80	4.5	1.6
3	SCH 40	3/4"	80	2.7	0.6
3	SCH 40	3/4"	80	0.9	0.1
				TOTAL PIPING LOSS	**13.2**

C. MISCELLANEOUS LOSS/GAIN

ITEM	SIZE	LOSS IN PSI
Service Lateral		0.5
Water Meter		0.5
Backflow Preventer		12.0
Master Valve		3.0
Pressure Regulator		4.0
Control Valve		3.0
10% Fittings Loss		1.3
TOTAL MISCELLANEOUS LOSSES		**24.3**

D. SYSTEM PRESSURE LOSS CALCULATION

TOTAL SYSTEM LOSS (B + C)	37.6
MINIMUM PRESSURE REQUIRED AT LAST HEAD	40.0
DESIGN PRESSURE	77.6
20% PRESSURE BUFFER	15.5
TOTAL DESIGN PRESSURE	93.1
TOTAL SYSTEM PRESSURE (From A Above)	110.0
RESIDUAL PRESSURE	**16.9**
Residual Pressure as a % of System Pressure	15%
Set Pressure Regulator At:	85 PSI

IRRIGATION PRESSURE LOSS CALCULATIONS

Project: Lakeside Equestrian
Location: Lakeside, California
Date: January 29, 2020
Job No.: 17-002
By: Fukuyama

Control Valve No.: A-20 **GPM:** 16.2 **Size:** 1"

A. SYSTEM HEAD GAIN OR LOSS

Static Pressure at Meter (per Lakeside Water District)	**110**
Elevation at Meter	412
Elevation at Highest Head	411
Head Gain/Loss to Highest head (Elev. Diff. x 0.433)	0.4
TOTAL SYSTEM PRESSURE	**110.4**

B. PIPING LOSS

SECTION	TYPE	SIZE	LENGTH	ACCUM. GPM	LOSS IN PSI
Mainlines					
1	SCH 40	2"	585	18.0	1.6
1	SCH 40	1-1/2"	845	16.3	6.6
Lateral Lines					
1	SCH 40	1-1/2"	28	16.3	0.2
2	SCH 40	1"	9	11.8	0.3
3	SCH 40	1"	25	10.0	0.7
4	SCH 40	1"	25	8.2	0.5
5	SCH 40	3/4"	25	6.4	1.0
6	SCH 40	3/4"	25	4.5	0.5
7	SCH 40	3/4"	25	2.7	0.2
8	SCH 40	3/4"	25	0.9	0.0
				TOTAL PIPING LOSS	**11.6**

C. MISCELLANEOUS LOSS/GAIN

ITEM	SIZE	LOSS IN PSI
Service Lateral		0.5
Water Meter		0.5
Backflow Preventer		12.0
Master Valve		3.0
Pressure Regulator		4.0
Control Valve		3.0
10% Fittings Loss		1.2
TOTAL MISCELLANEOUS LOSSES		**24.2**

D. SYSTEM PRESSURE LOSS CALCULATION

TOTAL SYSTEM LOSS (B + C)	35.7
MINIMUM PRESSURE REQUIRED AT LAST HEAD	40.0
DESIGN PRESSURE	75.7
20% PRESSURE BUFFER	15.1
TOTAL DESIGN PRESSURE	90.9
TOTAL SYSTEM PRESSURE (From A Above)	110.4
RESIDUAL PRESSURE	**19.6**
Residual Pressure as a % of System Pressure	18%
Set Pressure Regulator At:	92 PSI

MATURE IRRIGATION SCHEDULE - CONTROLLER "A"

PROJECT INFORMATION

Project: Lakeside Equestrian Facility
Proj. #: 17-002
Date: January 31, 2020
By: Fukuyama

Controller No.: A
Controller Location: Storage
Controller Description: CALSENSE CS3-24-S1/CS3-GR/COMM 5YR/GR-STUBBY/-FM 1B
Irrigation Schedule Description: Average Minutes Per Week of Irrigation

AREA EVAPOTRASPIRATION DATA

	Lakeside											
	JAN.	FEB.	MAR.	APR.	MAY	JUN.	JUL.	AUG.	SEP.	OCT.	NOV.	DEC.
Normal Year Average ETo (Inches Per Month)	2.10	2.60	3.70	4.50	5.50	6.10	6.70	6.20	5.40	3.80	2.60	1.90
Normal Year Average ETo (Inches Per Week)	0.48	0.60	0.85	1.04	1.27	1.41	1.55	1.43	1.25	0.88	0.60	0.44

IRRIGATION SCHEDULE DIVIDE THE MINUTES PER WEEK BY THE NUMBER OF IRRIGATION CYCLES TO DETERMINE RUN TIME PER CYCLE.

VALVE	VALVE DESCRIPTION	CROP COEF. (Kc)	DEN. FAC. (K_d)	MICROCL. FAC. (K_{mc})	LANDSC. COEFF. (K_L)	IRRIG. EFFIC. (IE)	PRECIP. RATE (PR)	AVERAGE MINUTES PER WEEK OF IRRIGATION JAN.	FEB.	MAR.	APR.	MAY	JUN.	JUL.	AUG.	SEP.	OCT.	NOV.	DEC.
1	Shrub, MP Rotator	0.3	1.0	1.0	0.3	0.75	0.41	28	35	50	61	74	83	91	84	73	52	35	26
2	Shrub, MP Rotator	0.3	1.0	1.0	0.3	0.75	0.41	28	35	50	61	74	83	91	84	73	52	35	26
3	*Bubblers, trees, .25 gpm	0.5	1.0	1.0	0.3	0.90	0.65	25	31	44	53	65	72	79	73	64	45	31	23
4	Shrub, MP Rotator	0.3	1.0	1.0	0.3	0.75	0.41	28	35	50	61	74	83	91	84	73	52	35	26
5	Shrub, MP Rotator	0.3	1.0	0.8	0.2	0.75	0.41	19	23	33	41	50	55	60	56	49	34	23	17
6	Shrub, MP Rotator	0.3	1.0	0.8	0.2	0.75	0.41	19	23	33	41	50	55	60	56	49	34	23	17
7	Shrub, MP Rotator	0.3	1.0	0.8	0.2	0.75	0.41	19	23	33	41	50	55	60	56	49	34	23	17
8	Bubblers, trees in DG, .25 gpm	0.5	1.0	1.0	0.5	0.90	1.90	8	11	15	18	22	25	27	25	22	15	11	8
9	Basin Shrub, MP Rotator	0.4	1.0	1.0	0.4	0.75	0.41	37	47	66	81	99	110	121	112	98	69	47	34
10	Basin Shrub, MP Rotator	0.4	1.0	1.0	0.4	0.75	0.41	37	47	66	81	99	110	121	112	98	69	47	34
11	Channel Shrub, MP Rotator	0.3	1.0	1.0	0.3	0.75	0.41	28	35	50	61	74	83	91	84	73	52	35	26
12	Shrub, MP Rotator	0.3	1.0	1.0	0.3	0.75	0.41	28	35	50	61	74	83	91	84	73	52	35	26
13	Channel Shrub, MP Rotator	0.3	1.0	1.0	0.3	0.75	0.41	28	35	50	61	74	83	91	84	73	52	35	26
14	*Bubblers, trees, .25 gpm	0.5	1.0	1.0	0.5	0.90	0.65	25	31	44	53	65	72	79	73	64	45	31	23
15	Basin Shrub, MP Rotator	0.4	1.0	1.0	0.4	0.75	0.41	37	47	66	81	99	110	121	112	98	69	47	34
16	Channel Shrub, MP Rotator	0.3	1.0	1.0	0.3	0.75	0.41	28	35	50	61	74	83	91	84	73	52	35	26
17	Channel Shrub, MP Rotator	0.3	1.0	1.0	0.3	0.75	0.41	28	35	50	61	74	83	91	84	73	52	35	26
18	Channel Shrub, MP Rotator	0.3	1.0	1.0	0.3	0.75	0.41	28	35	50	61	74	83	91	84	73	52	35	26
19	*Bubblers, trees, .25 gpm	0.5	1.0	0.8	0.4	0.90	0.65	20	25	35	43	52	58	64	59	51	36	25	18
20	Basin Shrub, MP Rotator	0.4	1.0	0.8	0.3	0.75	0.41	28	35	50	61	74	83	91	84	73	52	35	26
21	Basin Shrub, MP Rotator	0.4	1.0	0.8	0.3	0.75	0.41	28	35	50	61	74	83	91	84	73	52	35	26
							TOTAL MINUTES PER WEEK	554	693	985	1,204	1,465	1,635	1,793	1,658	1,445	1,022	693	511
							TOTAL HOURS PER WEEK	9.2	11.6	16.4	20.1	24.4	27.3	29.9	27.6	24.1	17.0	11.6	8.5

* Tree bubbler irrigation systems in irrigated areas are intended only for periodic supplemental irrigation as needed and shall not be on a regular schedule.

Note: Irrigation schedules are based upon historical climate data and are intended only as a general guide. Irrigation schedules shall be regularly adjusted to account for changes in climate conditions, maturity of plant materials and other site specific conditions.

Landscape Coefficient (K_L) = Species Factor (K_d) x Deensity Factor (K_D) x Microclimate Factor (K_{MC})

Minutes of Irrigation Per Week = $\frac{(ETo \times K_L) \times 60}{PR \times IE}$

NOTE:

FOR ESTABLISHMENT PHASE IRRIGATION SCHEDULE, INCREASE THE ABOVE RUN TIMES BY 25 PERCENT AND ADJUST TO SITE CONDITIONS AS REQUIRED.

WATER EFFICIENT LANDSCAPE WORKSHEET - NON-RESIDENTIAL

Model Water Efficient Landscape Ordinance

Lakeside Equestrian Facility

Project Reference Evapotranspiration (ETo)= 51.1 **Irrigation Water: Potable**

Regular Landscape Area

Hydrozone # / Planting Description (a)	Plant Factor (PF)	Irrigation Method (b)	Irrigation Efficiency (IE) (c)	ETAF (PF/IE)	Landscape Area (sq. ft.)	ETAF X Area	Estimated Total Water Use (ETWU) (d)
#1 low-water use shrubs and g.c.	0.3	MP Rotator	0.75	0.40	14,584	5,834	184,820
#2 Tree bubblers in DG	0.5	Bubbler	0.90	0.56	4,700	2,611	82,725
#3 Biofilt. basins, hydroseed mix	0.4	MP Rotator	0.75	0.53	16,090	8,581	271,874
#4 Channel slopes, hydroseed mix	0.2	MP Rotator	0.75	0.27	13,584	3,622	114,765
				Totals	**48,958**	**20,648**	**654,184**

Special Landscape Area

Hydrozone # / Planting Description	Plant Factor (PF)	Irrigation Method	Irrigation Efficiency (IE)	ETAF (PF/IE)	Landscape Area (sq. ft.)	ETAF X Area	Estimated Total Water Use (ETWU)
				1.00		0	0
				1.00		0	0
				1.00		0	0
				Totals	**0**	**0**	**0**
				Total Landscape Area	**48,958**	**ETWU Total**	**654,184**
				Maximum Allowed Water Allowance (MAWA) (e)			**697,989**

ETAF Calculations

Regular Landscape Areas

Total ETAF x Area	20,648
Total Area	48,958
Average ETAF	**0.42**

All Landscape Areas

Total ETAF x Area (Reg + SA)	20,648
Total Area (Reg+ SA)	48,958
Site-wide ETAF	**0.42**

Average ETAF for Regular Landscape Areas must be 0.55 or below for residential areas, and 0.45 or below for non-residential areas.

Notes:
(a) Hydrozone #/Planting Description: e.g., 1.) front lawn, 2.) low water use plantings, 3.) medium water use plantings
(b) Irrigation Method: overhead spray or drip.
(c) Irrigation Efficiency: 0.75 for spray head, 0.81 for drip.
(d) ETWU (Annual Gallons Required) = ETo x 0.62 x ETAF x Area, where 0.62 is a conversion factor.
(e) MAWA (Annual Gallons Allowed) = (ETo) x (0.62) x [(ETAF x LA) + ((1-ETAF) x SLA)]
(f) Per the Model Water Efficient Landscape Ordinance, revised July 2015, Section 492.14.c Recycled Water, areas irrigatec with recycled water are considered Special Landscape Areas

LI-5

LICENSED LANDSCAPE ARCHITECT NICHOLAS F. DE LORENZO NO.1388 12-31-22 2-3-20 STATE OF CALIFORNIA

DeLorenzo International
Landscape Architecture + Land Planning
3954 Murphy Canyon Road, Suite D-206
San Diego, CA • 92123 • 858-430-6155

February 3, 2020 Job Number: 17-002

DEPARTMENT OF PARKS AND RECREATION
COUNTY OF SAN DIEGO
5500 OVERLAND DRIVE, SUITE 410 SAN DIEGO, CALIFORNIA 92123

COUNTY OF SAN DIEGO PARKS AND RECREATION

NO.	REVISIONS	APPR.	DATE

DESIGNED BY: MS
DRAWN BY: MS/KF
CHECKED BY: ND
PROJECT MANAGER: MS

LAKESIDE EQUESTRIAN FACILITY
LAKESIDE, CALIFORNIA
IRRIGATION CALCULATIONS

SCALE AS SHOWN
PROJ. NO. 1020367
FILE NO.
SHEET 34 OF 34

GENERAL NOTES:

THIS PROJECT INVOLVES THE DESIGN, DOCUMENTATION, ENGINEERING AND CONSTRUCTION OF ALL BUILDINGS AND ELEMENTS DESCRIBED HEREIN. THE SCOPE OF WORK INCLUDES BUT IS NOT LIMITED TO ALL ARCHITECTURAL, MECHANICAL, ELECTRICAL, PLUMBING, COMMERCIAL KITCHEN AND STRUCTURAL FOUNDATION DESIGN FOR THE ITEMS ENUMERATED IN AREAS 1-6.

REFER TO THE CIVIL ENGINEERING AND LANDSCAPE DRAWINGS ASSOCIATED WITH THESE BID DOCUMENTS FOR REQUIRED SITE RELATED WORK AND CONSTRUCTION

THE BID DOCUMENTS, INCLUDING THE BASE BID CONDITION AND ANY ADDITIVE ALTERNATES, SHALL INCLUDE ALL PROGRAM AND DESIGN AMENITIES AS DESCRIBED HEREIN.

THE BID DRAWINGS FOR THIS PROJECT ARE SCHEMATIC IN NATURE SHOWING OVERALL DESIGN INTENT FOR CONTRACTOR PRICING AND SELECTION.

1. THE CONTRACTOR IS TO PREPARE PRICING FOR COMPLETE BUILDINGS, STRUCTURES AND AMENITIES AND IS TO PREPARE FINAL CONSTRUCTION PLANS FOR ALL BUILDINGS, STRUCTURES AND AMENITIES
2. THE NAME OF ANY MANUFACTURER(S) LISTED OR INCLUDED IN PLANS AND/OR SPECIFICATIONS IS TO BE CONSIDERED, "OR EQUAL" IN ALL INSTANCES.
3. ALL STRUCTURE, MATERIALS AND EXTERIOR FINISHES SHALL MATCH AND/OR COORDINATE THROUGHOUT SITE.
4. ALL BUILDING STRUCTURES REQUIRE PERMITTING THROUGH THE COUNTY OF SAN DIEGO DEPARTMENT OF PLANNING AND DEVELOPMENT SERVICES. THE CONCESSION AREA WILL REQUIRE DEH PLAN CHECK APPROVAL FOR COMMERCIAL KITCHENS
5. SELECTED GENERAL CONTRACTOR WILL PREPARE BUILDING PERMIT AND CONSTRUCTION DRAWINGS FOR THE PROJECT.
6. THE CONTRACTOR IS RESPONSIBLE FOR NOTIFYING APPROPRIATE PARTIES, OBTAINING NECESSARY PLAN REVIEWS AND APPROVALS, PERMITS AND INSPECTIONS.
7. PLANS ARE TO BE DESIGNED TO CONFORM TO THE CALIFORNIA BUILDING CODE (CBC), CURRENT EDITION.
8. PLANS TO BE DESIGNED ARE TO BE COMPLIANT WITH CURRENT ADA STANDARDS.
9. THE CONTRACTOR IS RESPONSIBLE FOR NOTIFYING AND OBTAINING APPROVALS FROM UTILITY OWNERS PRIOR TO PERFORMING WORK.
10. THE CONTRACTOR IS RESPONSIBLE FOR PROVIDING ALL SURVEY AND LAYOUT.
11. THE BID DOCUMENTS CONTAIN A FIRE SPRINKLER SPECIFICATION WITH WHICH THE CONTRACTOR SHALL COMPLY.
12. THE CONTRACTOR SHALL BE RESPONSIBLE FOR PROVIDING FIRE SPRINKLER PLANS AND OBTAINING NECESSARY REVIEWS AND APPROVALS BASED ON SPECIFICATIONS PROVIDED IN THE BID DOCUMENTS.
13. STRUCTURES AND ELECTRICAL OUTLETS, LIGHTS, STORAGE AREA UNDER BLEACHERS ARE TO BE RAISED 1-FOOT ABOVE THE FLOODPLAIN.
14. CONTRACTOR TO APPLY ANTI-GRAFFITI COATING AS SPECIFIED IN BID DOCUMENTS TO ALL STRUCTURES TO A MINIMUM HEIGHT OF 10'-0" WHERE APPLICABLE; FULL HEIGHT OF WALLS WHERE EAVES ARE LESS THAN 10'-0"
15. CONTRACTORS TO APPLY CLEAR COAT SEALANT TO ALL CONCRETE FLOORS AND PADS.
16. ALL BUILDING STRUCTURES ARE SHOWN IN MATTE FINISH TO USE PREFABRICATED, STANDARDIZED METAL BUILDING SYSTEMS FOR WALLS, ROOF, AND STRUCTURE, UNLESS NOTED OTHERWISE.
17. THE PROPOSED STRUCTURES ARE TO BE PREFABRICATED STRUCTURES WHERE FEASIBLE.
18. WHERE INDICATED, ROCK FINISHED BASES FOR EXPOSED COLUMNS ARE TO BE PROVIDED.
19. BLEACHER, SCOREBOARD AND PREFABRICATED BUILDING COMPONENTS TO BE DESIGNED AND ENGINEERED BY PRODUCT MANUFACTURERS.
20. THE DESIGN OF MULTIPLE VERSIONS OF THE SAME ELEMENT WILL BE REPETITIVE IN NATURE.
21. THE SCOREBOARD VENDOR TO PROVIDE ALL LAYOUT AND SPECIFICATION OF SCOREBOARDS, PA SYSTEMS, ETC.
22. CONSTRUCTION SHALL CONFORM TO THE FOLLOWING: .
    - SAN DIEGO REGIONAL STANDARD DRAWINGS (SDRSD), CURRENT EDITION.
    - ALL OTHER APPLICABLE FEDERAL, STATE, AND LOCAL CODES, ORDINANCES AND GUIDELINES.
23. THE CONTRACTOR SHALL CONFIRM BY FIELD MEASUREMENTS THE LOCATION AND ELEVATIONS OF ALL IMPROVEMENTS PROPOSED TO BE CONSTRUCTED PRIOR TO ACTUAL CONSTRUCTION. THE CONTRACTOR WITH THE RESIDENT ENGINEER SHALL ENSURE NO CONFLICTS ARISE BETWEEN THE PROPOSED PARK IMPROVEMENTS AND ANY OTHER WORK.
24. THE CONTRACTOR SHALL BE RESPONSIBLE FOR AND HAVE COMPLETE CONTROL OVER THE CONSTRUCTION MEANS, METHODS, TECHNIQUES, SEQUENCES AND PROCEDURES USED DURING CONSTRUCTION. THE CONTRACTOR SHALL BE RESPONSIBLE FOR ALL SAFETY PRECAUTIONS AND PROGRAMS IN CONNECTION WITH THE WORK. THE ARCHITECT WILL NOT BE RESPONSIBLE FOR THE CONTRACTOR'S FAILURE TO CARRY OUT THE WORK IN ACCORDANCE WITH THE CONTRACT DOCUMENTS.
25. THE CONTRACTOR SHALL ENSURE THE JOB SITE CONDITIONS DURING CONSTRUCTION OF THIS PROJECT ARE SAFE FOR ALL PERSONS AND PROPERTY.
26. ATTENTION IS DIRECTED TO THE POSSIBLE EXISTENCE OF UNDERGROUND UTILITY FACILITIES NOT KNOWN OR IN A LOCATION DIFFERENT FROM THAT WHICH IS SHOWN ON THE PLANS OR IN THE SPECIAL PROVISIONS. THE CONTRACTOR SHALL TAKE STEPS TO ASCERTAIN THE EXACT LOCATION OF ALL UNDERGROUND FACILITIES PRIOR TO BEGINNING WORK THAT MAY DAMAGE SUCH FACILITIES OR INTERFERE WITH THEIR SERVICE. 72 HOURS BEFORE EXCAVATING, THE CONTRACTOR SHALL VERIFY THE LOCATION OF UNDERGROUND FACILITIES BY CONTACTING UNDERGROUND SERVICE ALERT AT 1-800-422-4133. THE CONTRACTOR MUST ALSO INDIVIDUALLY CONTACT OPERATORS OF GRAVITY SEWER SYSTEMS AND CERTAIN OTHER UTILITIES, WHO ARE NOT MEMBERS OF UNDERGROUND SERVICE ALERT, THE CONTRACTOR SHALL BE HELD LIABLE FOR ALL DAMAGES INCURRED TO UTILITY FACILITIES DUE TO THIS CONSTRUCTION.
27. THE CONTRACTOR SHALL ARRANGE AND PAY FOR ALL PERMITS AND FEES NECESSARY TO COMPLETE THIS CONSTRUCTION.
28. THIS PROJECT SHALL COMPLY WITH ALL COUNTY OF SAN DIEGO, DEPARTMENT OF PUBLIC WORKS (DPW) REQUIREMENTS FOR STORM WATER POLLUTION PREVENTION AND BEST MANAGEMENT PRACTICES (BMP'S) TO PREVENT POTENTIALLY NEGATIVE IMPACTS ON STORM WATER QUALITY. ALL SEDIMENT CONTROL MEASURES SHALL COMPLY WITH DPW REQUIREMENTS; STORM WATER MANAGEMENT AND DISCHARGE CONTROL ORDINANCE, SECTION 67.818(C); AND SHALL BE IN CONFORMANCE WITH THE STATE OF CALIFORNIA, DEPARTMENT OF TRANSPORATION (CALTRANS) STORM WATER QUALITY HANDBOOKS. NO WORK HAVING POTENTIAL TO CAUSE WATER POLLUTION, SHALL BE PERFORMED UNTIL THE WPCP PLAN HAS BEEN SUBMITTED BY THE CONTRACTOR AND APPROVED BY THE PROJECT MANAGER, SEE SPECIFICATIONS.
29. IF CONSTRUCTION ACTIVITIES SHALL OCCUR DURING BIRD NESTING SEASON (SEPT. 15-FEBRUARY 1) A NESTING BIRD SURVEY WILL BE REQUIRED BY A COUNTY APPROVED BIOLOGIST NO MORE THAN 72 HOURS PRIOR TO COMMENCEMENT OF CONSTRUCTION. IF ACTIVE NESTS ARE DETECTED, PROTECTION MEASURES WILL BE RECOMMENDED TO AVOID DISTURBANCE TO NESTS
30. FINISHED PROJECT SHALL COMPLY WITH CALIFORNIA BUILDING CODE (CBC) SECTIONS IIB-240 AND IIB-246.

UTILITY ALERT NOTE:

ATTENTION IS DIRECTED TO THE POSSIBLE EXISTENCE OF UNDERGROUND UTILITY FACILITIES NOT KNOWN OR IN A LOCATION DIFFERENT FROM THAT WHICH IS SHOWN ON THE PLANS OR IN THE SPECIAL PROVISIONS. THE CONTRACTOR SHALL TAKE STEPS TO ASCERTAIN THE EXACT LOCATION OF ALL UNDERGROUND FACILITIES PRIOR TO PERFORMING WORK THAT MAY DAMAGE SUCH FACILITIES OR INTERFERE WITH THEIR SERVICE. FORTY-EIGHT HOURS BEFORE EXCAVATING, THE CONTRACTOR SHALL VERIFY THE LOCATION OF UNDERGROUND FACILITIES BY CONTACTING UNDERGROUND SERVICE ALERT AT TELEPHONE 1-800-422-4133.

THE CONTRACTOR MUST ALSO INDIVIDUALLY CONTACT OPERATORS OF GRAVITY SEWER SYSTEMS AND CERTAIN OTHER UTILITIES, WHO ARE NOT MEMBERS OF UNDERGROUND SERVICE ALERT.

-1 0 1 2 3 4 5 6 7 8 9 10

FOR REDUCED PLANS
ORIGINAL SCALE IS IN INCHES

COUNTY OF SAN DIEGO, CALIFORNIA
DEPARTMENT OF PARKS AND RECREATION

PLANS FOR CONTRACTOR PRICING

LAKESIDE EQUESTRIAN FACILITY BUILDINGS AND AMENITIES



VICINITY MAP
1" = 500'-0"

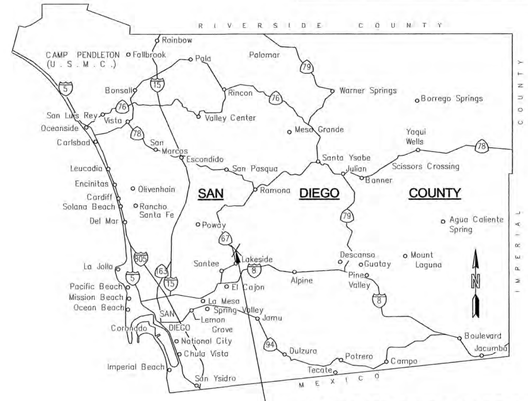

PROJECT LOCATION

SHEET INDEX:

SEE SHEET A 0.0.1

CONSULTANT LIST:

ARCHITECT:	WARREN SCOTT + ARCHITECTURE 763 SECOND STREET, SUITE 200 ENCINITAS, CA 92024 760.943.8180
MECHANICAL/PLUMBING CONSULTANT:	VAN DER VEEN ENGINEERING CONSULTANTS 28362 VINCENT MORAGA, SUITE A1 TEMECULA, CA 92590 951.795.5172
ELECTRICAL CONSULTANT:	MORAES, PHAM & ASSOCIATES PALOMAR AIRPORT ROAD, SUITE 120 CARLSBAD, CA 92011 760.431.7177
FOOD SERVICE CONSULTANT:	FOOD SERVICE DESIGN GROUP 1202 MARKET STREET SAN DIEGO, CA 92101 619.239.8156
COMPOST CONSULTANT:	HIDDEN RESOURCES 4231 BALBOA AVE, SUITE 104 SAN DIEGO, CA 92117 619.243.9293

CONTRACTOR NOTE:

THESE PLANS REPRESENT THE SEPARATE BUILDINGS, STRUCTURES AND EQUIPMENT PLANS AS REQUIRED TO COMPLETE THE EQUESTRIAN FACILITY PROJECT. REFER TO THE CIVIL (GRADING AND DRAINAGE), ELECTRICAL, SEWER, PLANTING AND IRRIGATION PORTION OF THE PROJECT.

ALL NON-STRUCTURAL CONCRETE SLABS, BLEACHER AREA WALKWAYS, CURBS, DRIVES, AND SIDEWALKS SHOWN ON THE SITE PLAN ARE UNDER THE CIVIL ENGINEERS SCOPE OF WORK, ALONG WITH ALL FENCING, PAVING, GATES AND SITE UTILITIES TO THE INDIVIDUAL STRUCTURES.

LICENSED ARCHITECT
WARREN W. SCOTT
C-011211
11.30.19
RENEWAL DATE
STATE OF CALIFORNIA

PLANS PREPARED BY:
763 2nd Street
Suite 200
Encinitas California
92024
760.943.8180
www.wsaala.com
WARREN SCOTT + ARCHITECTURE

ISSUE FOR BID - 2/03/2020 NOT FOR CONSTRUCTION

SHEET: A 0.0.0

DEPARTMENT OF PARKS AND RECREATION
COUNTY OF SAN DIEGO
5500 OVERLAND DRIVE, SUITE 410 SAN DIEGO, CALIFORNIA 92123

COUNTY OF SAN DIEGO PARKS AND RECREATION

CHIEF DEVELOPMENT
CHIEF OPERATIONS
DIRECTOR

DATE	NO.	REVISIONS	APPR.	DATE
2/13/20	Rev	Description		Date
2/13/20				
2/13/20				

DESIGNED BY: WSA
DRAWN BY: WSA
CHECKED BY: WSA
PROJECT MANAGER: IESZIC FORMELLER

LAKESIDE EQUESTRIAN FACILITY
Buildings & Amenities Cover Sheet

SCALE AS SHOWN | SHEET 1
PROJ. NO. 1020367 | OF
FILE NO. | 68

E:\DwDrive\WSA - Lakeside Equestrian Center\Construction Drawings\Submitted Info\Lakeside Equestrian Center_CD1_Submitted Info1.rvt

-1 0 1 2 3 4 5 6 7 8 9 10

FOR REDUCED PLANS
ORIGINAL SCALE IS IN INCHES

ISSUE FOR BID - 2/03/2020 NOT FOR CONSTRUCTION

OVERALL SHEET INDEX:

ARCHITECTURAL
A 0.0.0 Buildings & Amenities Cover Sheet
A 0.0.1 Overall Sheet Index
A 0.0.2 Overall Site Plan

STRUCTURAL
S 0.0.1 Typical Structural Details

AREA 1 SHEET INDEX:

ARCHITECTURAL
A 1.0.0 Area 1 Site Plan
A 1.0.1 Floor Plan - Covered Arena
A 1.0.2 Elevations - Covered Arena
A 1.0.3 3D Roof Plan - Covered Arena
A 1.1.1 Floor Plan - Meeting Room
A 1.1.2 Enlarged Floor Plan - Meeting Room
A 1.1.3 Elevations/ Sections - Meeting Room
A 1.2.1 Floor Plan/ Foundation Plan/ Elevations - Restrooms
A 1.3.1 Dumpster Area Floor Plan/ Elevations
A 1.4.1 Floor / Second Floor Plans - Announcers Booth
A 1.4.2 Elevations/ Sections - Announcers Booth
A 1.6.1 Electronic Scoreboard Details
A 1.7.1 Floor Plan - Bleachers
A 1.7.2 Elevations/ Sections - Bleachers
A 1.8.1 Floor Plan - Patio Area

FOOD SERVICE
FS 1.1.1 Food Service Equipment & Schedule
FS - H1 Hood Drawings & Specifications
FS - H2 Hood Drawings & Specifications
FS - H3 Hood Drawings & Specifications

MECHANICAL
M 0.0.1 Mechanical Legend and Notes
M 0.0.2 Mechanical Schedule
M 0.0.3 Mechanical Details
M 0.0.4 Mechanical Details
M 1.1.1 Mechanical Floor Plan Meeting Room
M 1.1.2 Mechanical Roof Plan
M 1.1.3 Mechanical Ventilation Calculation

ELECTRICAL
E 1.0.0 Standard Electrical Symbols and Abbreviations
E 1.0.1 Covered Arena Electrical Plan
E 1.1.1 Meeting Room Lighting Plan
E 1.1.2 Meeting Room Power Plan
E 1.2.1 Restrooms Power & Lighting Plans
E 1.4.1 Announcers Booth Electrical Plans

PLUMBING
P 0.0.0 Plumbing Legend and Notes
P 0.0.1 Plumbing Schedules
P 0.0.3 Plumbing Details
P 1.1.1 Plumbing Floor Plan - Waste
P 1.1.2 Plumbing Floor Plan - Waste
P 1.1.3 Plumbing Diagrams
P 1.2.1 Restroom Plumbing Plans/ Diagrams

AREA 2 SHEET INDEX:

ARCHITECTURAL
A 2.0.0 Area 1 Site Plan
A 2.1.1 Floor Plan - Shade Structure
A 2.1.2 Elevations/ Sections - Shade Structure
A 2.4.1 Covered Viewing Box Details

AREA 3 SHEET INDEX:

ARCHITECTURAL
A 3.1.0 Area 3 Site Plan
A 3.1.1 Floor Plan/ Roof Plan - Coral Shade Structure
A 3.1.2 Elevations/ Sections - Coral Shade Structure
A 3.2.1 Floor Plan - Compost Area
A 3.2.2 Elevations/ Sections - Compost Area
A 3.3.1 Details - Water Truck Filling Station

AREA 4 SHEET INDEX:

ARCHITECTURAL
A 4.1.0 Area 4 Site Plan
A 4.1.1 Floor Plan/ Foundation Plan - Shop Storage
A 4.1.2 Elevations/ Sections - Shop Storage
A 4.2.1 Floor Plan/ Foundation Plan - Host Pad Shade
A 4.2.2 Elevations/ Sections - Host Pad Shade

ELECTRICAL
E 4.1.1 Shop Storage Power and Lighting Plans

AREA 5 SHEET INDEX:

ARCHITECTURAL
A 5.1.0 Area 5 Site Plan
A 5.1.1 Floor Plan - Shade Structure Pavilion
A 5.2.1 Picnic Tables - Details
A 5.2.2 Trash/ Recycle - Details
A 5.3.1 Trash Bin For Horse Manure

AREA 6 SHEET INDEX:

ARCHITECTURAL
A 6.1.0 Area 6 Site Plan
A 6.3.1 Details - County Signage Monument
A 6.4.1 Entry Gate - Details

CONTRACTOR NOTES:

1. STAIN/ PAINT FOR CEDAR SIDING TO BE INCLUDED IN CONTRACTOR PRICING - COLORS TO BE DETERMINED.
2. ALL METALS ROOFS TO BE SAME COLOR AS DETERMINED BY COUNTY - COLORS AND SAMPLES TO BE SUBMITTED DURING SHOP DRAWING REVIEW
3. CONTRACTOR TO PROVIDE PHOTOS AND/ OR SAMPLES OF ALL BUILDING MATERIALS (SIDING, COBBLESTONE, ROOF, ETC) FOR COUNTY REVIEW & APPROVAL FOR ALL STRUCTURES
4. ALLSTRUCTURES TO RECIEVE ANTI-GRAFITTI COATING TO THE ROOF EAVE OR 10'-0" AFF WHICHEVER IS LOWER. SUBMIT SAMPLES OF ANTI-GRAFITTI COAT FOR COUNTY APPROVAL.
5. HITCHING POSTS TO BE CLASSIC HITCHING POST BY BARN PRO'S NATIONWIDE (OR APPROVED EQUAL); COLOR-BROWN, QTY-9. WWW.BARNPROS.COM, (866) 844-2276
6. ARENA FENCING TO BE PRIEFERT RODEO & RANCH EQUIPMENT BY KOVAC RANCH EQUIPMENT (OR APPROVED EQUAL); COLOR-STANDARD, QTY-SEE PLANS; WWW.KOVACRANCHEQUIPMENT.COM
7. WATER TRUCK FILLER TO BE 2" OVERHEAD LOAD WATER STATION BY AQUA-FLOW (OR APPROVED EQUAL); QTY-1. INFO@AQUAFLOWINTL.COM
8. FOOD SERVICE EQUIPMENT TO BE AS NOTED BY SAN DIEGO RESTAURANT SUPPLY (OR APPROVED EQUAL); WWW.SDRS.COM; (619) 239-8107
9. RAISED BRICK PLATFORM BRICKS TO BE BY CONTRACTOR; COLOR-TBD STANDARD SIZES 8x8x2.25 & 8x4x2.25; SAMPLE TO BE PROVIDED FOR COUNTY REVIEW & APPROVAL
10. MATERIAL WRAP @ ARENA FENCING - 66 PANELS OF 1002 VINYL COATED MESH, 3' (TALL) X 12' (LONG); 4 PANELS VINYL COATED POLYESTER INDUSTRIAL STRENGTH FABRIC PRINTED WITH GRAPHICS (TBD), PROVIDE GROMMETS @ 24" O.C. ALL 4 SIDES, BY SHARPS TARPS, 800 - 658-8701 (OR APPROVED EQUAL)
11. COMPOST AREA TO RECIEVE PVC AIR DISTRIBUTION PIPING CONNECTED TO CINCINNATI FAN WITH RECYLCLE TIMER
12. ELECTRONIC SCOREBOARD TO BE DAKTRONICS LXV- 2130 (OR APPROVED EQUAL, 10MM LED MATRIX DISPLAY, W/DAKSTAT 3000 RODEO RESULTS SOFTWARE SYSTEM, OMNISPORT 2000 CONSOLE, VENUS CONTROLLER, NUMERIC SCOREBOARD & RODEO HORN INTERFACE W/SS-200 AUDIO SYSTEM & 2 LOUD SPEAKERS); QTY - 2 COMPLETE INTERCONNECTED SCOREBOARD SYSTEMS

VENDOR LIST:

STRUCTURES CONTAINED IN THIS PACKAGE ARE BASED ON PRODUCTS PROVIDED BY THE FOLLOWING. BID MAY BE SUBMITTED WITH THESE VENDORS OR WITH APPROVED EQUAL.
ALL PROPOSED EQUALS ARE TO MATCH PROPOSED STRUCTURES AND SPECS CONTAINED HEREIN.

ARENA STRUCTURE	OLYMPIA STEEL BUILDINGS 400 ISLAND AVE., MCKEES ROCKS DA 15136 PHONE: (888) 449-7756 EMAIL: CUSTOMERSERVICE@FACTORYUSA.COM
ENCLOSED BUILDINGS	ROMTEC INC 18240 NORTH BANK RD., ROSEBURG, OR 97470 PHONE: (541) 496-3541 EMAIL: CDOOLEY@ROMTEC.COM
SHADE STRUCTURES	REC WEST OUTDOOR PRODUCTS 31316 VIA COLLINS #118, WESTLAKE VILLAGE, CA 91362 PHONE: (818) 735-3838 EMAIL: BILL@RECWEST.COM
BLEACHERS	SOUTHERN BLEACHER COMPANY 105 LAKESIDE DR., FOLSOM, CA 95630 PHONE: (916) 312-4901 EMAIL: JOE@VENUESEATINGSOLUTIONS.COM
ARENA FENCING	KOVAC RANCH EQUIPMENT 7985 ENGINEER RD., SAN DIEGO, CA 93727 PHONE: (844) 268-0679 EMAIL: SALES@KOVACRANCHEQUIPMENT.COM
TRUCK FILLING STATION	AQUA FLOW, INT'L, INC. 4870 E. HALF MOON DR., FLAGSTAFF, AZ 86004 PHONE: (928) 380-6164 EMAIL: INFO@AQUAFLOWINTL.COM
ELECTRONIC SCOREBOARDS	DAKTRONICS, INC. 201 DAKTRONICS DR., BROOKINGS, SD 57006 PHONE: 605.691.3585 EMAIL: ERIC.CAIN@DAKTRONICS.COM
ENTRY GATE/SIGNAGE	STANFORD SIGN & AWNING, INC. 2556 FAIVRE ST. CHULA VISTA, CA 91911 PHONE: (619) 423-6200 EMAIL: LOVEALL@STANSIGN.COM

SHEET: A 0.0.1

LICENSED ARCHITECT
WARREN W. SCOTT
C-011211
11.30.19
RENEWAL DATE
STATE OF CALIFORNIA

763 2nd Street
Suite 200
Encinitas California
92024
760.943.8180
www.wsaala.com
WARREN SCOTT + ARCHITECTURE

DEPARTMENT OF PARKS AND RECREATION
COUNTY OF SAN DIEGO
5500 OVERLAND DRIVE, SUITE 410 SAN DIEGO, CALIFORNIA 92123

COUNTY OF SAN DIEGO PARKS AND RECREATION

NO.	REVISIONS	APPR.	DATE
Rev	Description		Date

DESIGNED BY: WSA
DRAWN BY: WSA
CHECKED BY: WSA
PROJECT MANAGER: IESZIC FORMELLER

LAKESIDE EQUESTRIAN FACILITY
Overall Sheet Index

SCALE: AS SHOWN
SHEET: 2
PROJ. NO.: 1020367
OF: 68
FILE NO.:

D:\OneDrive\WSA - Lakeside Equestrian Center\Construction Drawings\Abbreviated Index\Lakeside Equestrian Center_CD-1_Abbreviated Index.rvt

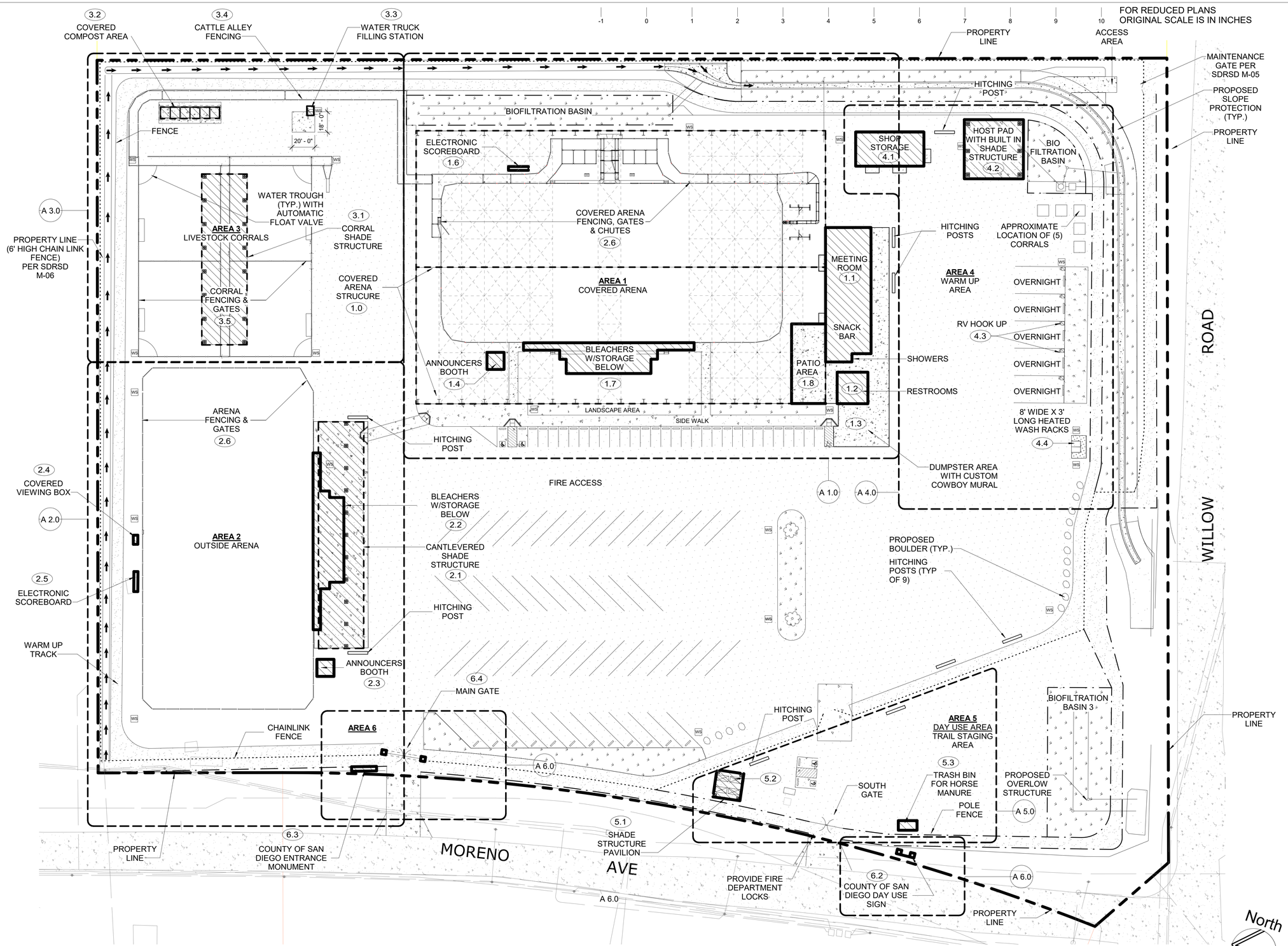

1 **Overall Site Plan**
1" = 40'-0"

ISSUE FOR BID - 2/03/2020 NOT FOR CONSTRUCTION

AREA 1 COVERED ARENA - SEE A1.0

NO.	STRUCTURES/ FEATURES
1.0	COVERED ARENA STRUCTURE
1.1	MEETING ROOM/SNACK BAR/SHOWERS
1.2	RESTROOM
1.3	DUMPSTER ENCLOSURE W/COWBOY MURAL
1.4	ANNOUNCERS BOOTH (QTY-2)
1.5	- NOT USED -
1.6	ELECTRONIC SCOREBOARD (QTY-2)
1.7	BLEACHERS W/STORAGE BELOW (QTY-2)
1.8	PATIO AREA
1.9	ARENA FENCING, GATES & CHUTES

AREA 2 OUTSIDE ARENA - SEE A2.0

NO.	STRUCTURES/ FEATURES
2.1	CANTILEVERED SHADE STRUCTURE
2.2	BLEACHERS W/STORAGE BELOW - SEE A 1.7
2.3	ANNOUNCERS BOOTH - SEE A 1.4
2.4	COVERED VIEWING BOX
2.5	ELECTRONIC SCOREBOARD - SEE A 1.6
2.6	ARENA FENCING & GATES

AREA 3 LIVESTOCK CORRAL - SEE A3.0

NO.	STRUCTURES/ FEATURES
3.1	ALLEY SHADE STRUCTURE
3.2	COVERED COMPOST AREA
3.3	WATER TRUCK FILLING STATION
3.4	CATTLE ALLEY FENCING & GATES
3.5	LIVESTOCK CORRAL FENCING & GATES

AREA 4 WARM UP AREA - SEE A4.0

NO.	STRUCTURES/ FEATURES
4.1	SHOP/ STORAGE
4.2	HOST PAD W/ SHADE STRUCTURE
4.3	RV HOOKUP CONNECTION (5 EA) - SEE CIVIL
4.4	HEATED WASH RACKS (2 EA.) - SEE CIVIL

AREA 5 DAY USE AREA - SEE A5.0

NO.	STRUCTURES/ FEATURES
5.1	SHADE STRUCTURE PAVILION
5.2	SITE FURNISHINGS
5.3	TRASH BIN FOR HORSE MANURE

AREA 6 SIGNAGE - SEE A6.0

NO.	STRUCTURES/ FEATURES
6.2	COUNTY DAY USE SIGN
6.3	COUNTY PARK ENTRANCE MONUMENT SIGN
6.4	LIGHTED ENTRANCE MAN GATE/ SIGN

SITE PLAN LEGEND:

- PROPOSED STRUCTURE
- BIOFILTRATION & PLANTING AREA PER CIVIL
- CONCRETE PER CIVIL
- PROPERTY LINE
- FENCE (TYPE #1)
- FENCE (TYPE #2)

SHEET: A 0.0.2

LICENSED ARCHITECT
WARREN W. SCOTT
C-011211
11.30.19
RENEWAL DATE
STATE OF CALIFORNIA

763 2nd Street
Suite 200
Encinitas California
92024
760.943.8180
www.wsaaia.com

WARREN SCOTT + ARCHITECTURE

DEPARTMENT OF PARKS AND RECREATION
COUNTY OF SAN DIEGO
5500 OVERLAND DRIVE, SUITE 410 SAN DIEGO, CALIFORNIA 92123
COUNTY OF SAN DIEGO PARKS AND RECREATION

NO.	REVISIONS	APPR.	DATE
Rev	Description		Date

DESIGNED BY: WSA
DRAWN BY: WSA
CHECKED BY: WSA
PROJECT MANAGER: IESZIC FORMELLER

LAKESIDE EQUESTRIAN FACILITY
Overall Site Plan

SCALE: AS SHOWN
SHEET: 3
PROJ. NO.: 1020367
OF: 68
FILE NO.:

E:\OneDrive\WSA - Lakeside Equestrian Center\Construction Drawings\Animated Interior\Lakeside Equestrian Center_CD-1_Animated Interior.rvt

-1 0 1 2 3 4 5 6 7 8 9 10

FOR REDUCED PLANS
ORIGINAL SCALE IS IN INCHES

ISSUE FOR BID - 2/03/2020 NOT FOR CONSTRUCTION

WALL TYPE SCHEDULE

EXTERIOR WALL - 8" REINFORCED CONCRETE MASONRY BLOCK WALL WITH MORTAR JOINTS, GROUTED SOLID ALL CELLS RUNNING BOND PATTERN.

INTERIOR WALL - 8" REINFORCED CONCRETE MASONRY BLOCK WALL WITH MORTAR JOINTS, GROUTED SOLID ALL CELLS RUNNING BOND PATTERN.

THESE PLAN VIEW AND ELEVATION DRAWINGS ARE A PRELIMINARY ARCHITECTURAL REPRESENTATION OF THE BUILDING.

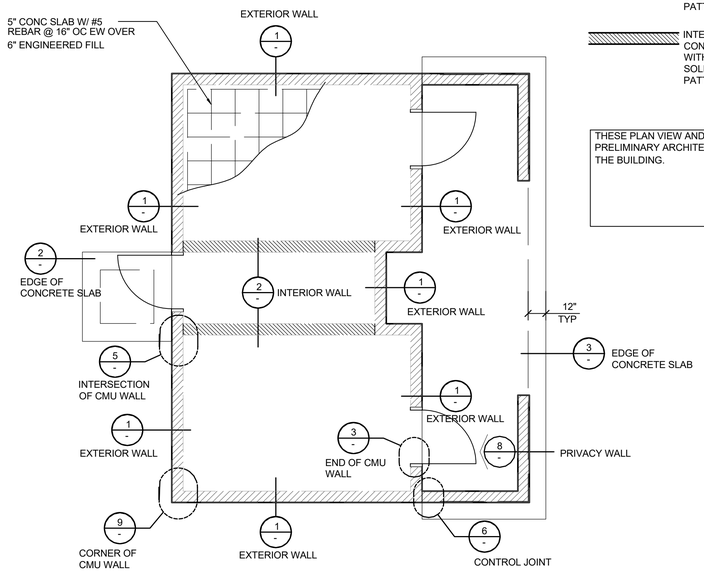

A **Typical Structural Details - Key Plans**
1/4" = 1'-0"

EXTERIOR WALL FOUNDATIONS - CHOOSE ONE OF THE FOLLOWING
SEE FLOOR PLAN FOR EXTERIOR WALL LOCATIONS

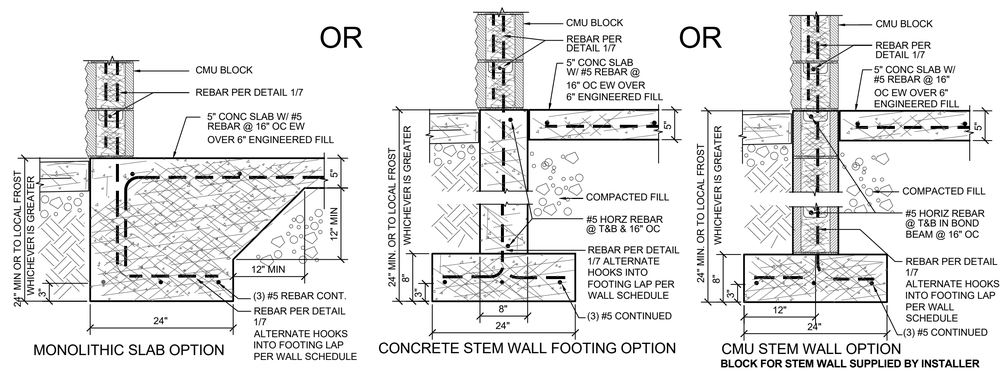

1 EXTERIOR WALL FOUNDATION DETAIL OPTIONS
SCALE: 1" = 1'-0"

GENERAL NOTES:

* WHEN USING EITHER STEM WALL OPTION RECESS STEM WALL THE THICKNESS OF SLAB AT DOOR THRESHOLD
* PRIVACY WALLS SHALL HAVE A 30" WIDE x 12" DEEP FOOTING
* CMU STEM WALL OPTION, CMU BLOCK IS BY INSTALLER
* VERTICAL REBAR IN SLAB/STEM WALL TO MATCH VERTICAL WALL REINFORCEMENT LAP PER WALL SCHEDULE

CMU REBAR SCHEDULE		
REBAR	MIN. LAP	BEND RAD.
#4	24"	3" MIN.
#5	30"	3-3/4" MIN.

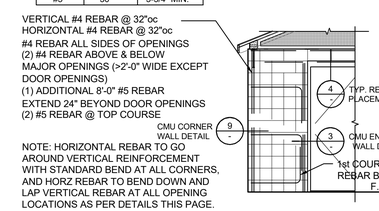

CMU REBAR NOTES:
- BENDS: MIN. INSIDE BEND RADIUS SHALL BE NOT LESS THAN 6d AS PER ACI 530-08 SECTION 1.15.6
- SPLICES: LAP SPLICES ARE PERMITTED AS PER ACI 530-08 SECTION 2.1.9.7

PIPES INSTALLED THROUGH CMU WALL NOTES:
- SUPPLY: THE FIXTURE SUPPLY LINE SHOULD BE BORED A 1/2" LARGER THAN REQUIRED LINE SIZE AND THE PORTION OF PIPE LOCATED IN CMU WALL SHALL BE WRAPPED WITH 10MIL BLACK TAPE
- WASTE PIPE: THE FIXTURE WASTE LINE SHOULD BE BORED A 1/2" LARGER THAN REQUIRED LINE SIZE.

8 CMU REBAR LAYOUT DETAIL
SCALE: 1/4" = 1'-0"

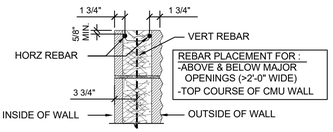

NOTE: REBAR INSTALLED AS PER ACI 530-08

4 8" CMU REBAR PLACEMENT
SCALE: 1" = 1'-0"

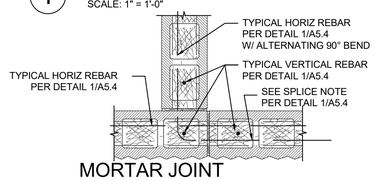

MORTAR JOINT
CMU INTERSECTION DETAIL
5
SCALE: 1" = 1'-0"

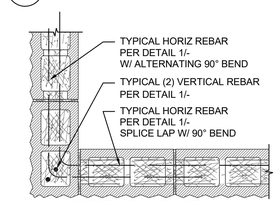

MORTAR JOINT
CMU CORNER DETAIL
9
SCALE: 1" = 1'-0"

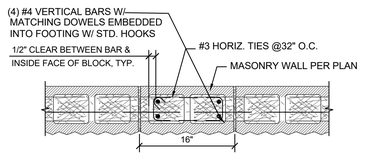

7 MASONRY PILASTER DETAIL
SCALE: 1" = 1'-0"

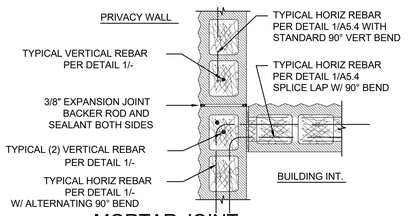

MORTAR JOINT
CMU CONTROL JOINT DETAIL
6
SCALE: 1" = 1'-0"

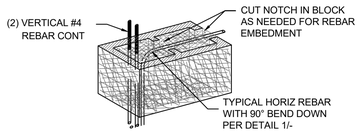

MORTAR JOINT
CMU WALL END DETAIL
10
SCALE: 1" = 1'-0"

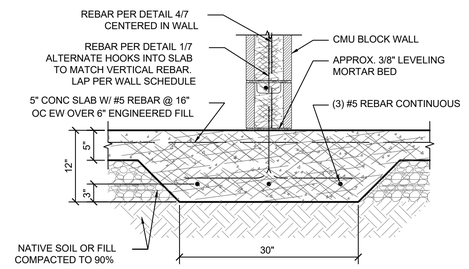

2 THICKENED SLAB AT INTERIOR WALLS
SCALE: 1" = 1'-0"

SEE FLOOR PLAN FOR INTERIOR WALL LOCATIONS

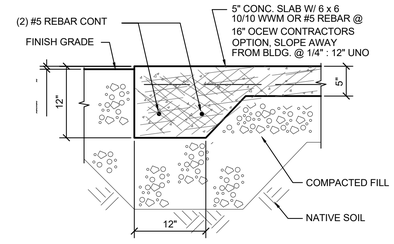

3 EDGE OF CONC SLAB
SCALE: 1" = 1'-0"

SHEET: S 0.0.1

LICENSED ARCHITECT
WARREN W. SCOTT
C-011211
11.30.19
RENEWAL DATE
STATE OF CALIFORNIA

763 2nd Street
Suite 200
Encinitas California
92024
760.943.8180
www.wsaaia.com

WARREN SCOTT + ARCHITECTURE

DEPARTMENT OF PARKS AND RECREATION
COUNTY OF SAN DIEGO
5500 OVERLAND DRIVE, SUITE 410 SAN DIEGO, CALIFORNIA 92123

COUNTY OF SAN DIEGO PARKS AND RECREATION

NO.	REVISIONS	APPR.	DATE
Rev	Description		Date

DESIGNED BY: WSA
DRAWN BY: WSA
CHECKED BY: WSA
PROJECT MANAGER: IEZACK FORMLLER

LAKESIDE EQUESTRIAN FACILITY
Typical Structural Details

SCALE	SHEET
AS SHOWN	4
PROJ. NO.	OF
1020367	
FILE NO.	68

E:\ArchDrive\PDS - Lakeside Equestrian Center\Construction Drawings\Active\Lakeside Equestrian Center_CD-1_Active.rvt 01/14/1

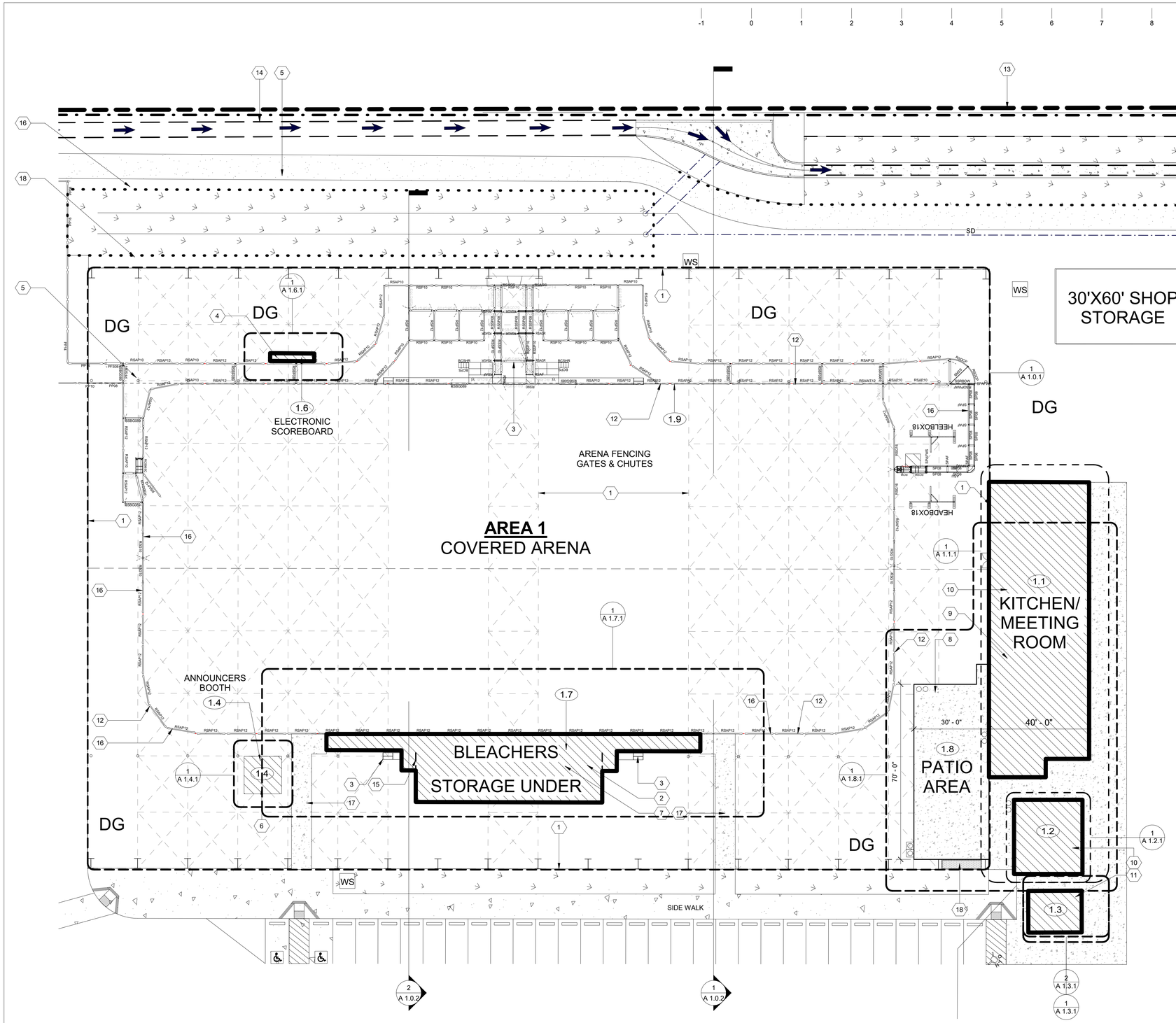

FOR REDUCED PLANS
ORIGINAL SCALE IS IN INCHES

INDEX OF SHEETS:

P 0.0.2 Unnamed
S 0.0.1 Structural Details
S 0.0.2 Unnamed

ARCHITECTURAL
0.0 Title Sheet
A 0.0 Title Sheet
1.0 Site Plan
A 1.0.0 Area 1 - Site Plan
A 1.0.4 Area 1 Overall - Site Plan
1.0.1 Covered Arena
A 1.0.1 Floor Plan - Covered Arena
A 1.0.2 Elevations/ Sections - Covered Arena
A 1.0.3 3D Roof Plan - Covered Arena
1.1 Meeting Room
A 1.1.1 Floor Plan - Meeting Room/ Kitchen
A 1.1.2 Enlarged Floor Plan - Meeting Room/ Kitchen
A 1.1.3 Elevations/ Sections - Meeting Room/ Kitchen
1.2 Restrooms & Shower Stalls
A 1.2.1 Floor Plans/ Elevations - Restrooms
1.3 Dumpster Area
A 1.3.1 Floor Plan/ Elevations - Dumpster Area
1.4 Announcers Booth
A 1.4.1 First/ Second Floor Plans - Announcers Booth
A 1.4.2 Elevations/ Sections - Announcers Booth
1.6 Electronic Scoreboard
A 1.6.1 Details - Electronic Scoreboard
1.7 Bleachers
A 1.7.1 Floor Plan - Bleachers
A 1.7.2 Elevations/ Sections - Bleachers
1.8 Patio Area
A 1.8.1 Floor Plan - Patio Area

ELECTRICAL
Electrical
E 1.0.0 Standard Electrical Symbols and Abbreviations
E 1.0.1 Covered Arena Electrical Plan
E 1.1.1 Meeting Room Lighting Plan
E 1.1.2 Meeting Room Power Plan
E 1.2.1 Restrooms Power & Lighting Plans
E 1.4.1 Announcers Booth Power & Lighting Plan

AREA 1 COVERED ARENA

NO.	STRUCTURES/ FEATURES
1.0	150'-0" X 360'-0" COVERED ARENA
1.1	MEETING ROOM/ KITCHEN
1.2	RESTROOM AND SHOWER
1.3	DUMPSTER (COWBOY MURAL)
1.4	ANNOUNCERS BOOTH
1.5	NOT USED
1.6	ELECTRONIC SCOREBOARD
1.7	BLEACHERS
1.8	PATIO AREA
1.9	ARENA FENCING, GATES & CHUTES

FOOD SERVICE
Food Service
FS 1.1.1 Food Service Equipment & Schedule
FS - H1 Hood Drawings & Specifications
FS - H2 Hood Drawings & Specifications
FS - H3 Hood Drawings & Specifications

MECHANICAL
Mechanical
M 0.0.1 Mechanical Legend and Notes
M 0.0.2 Mechanical Schedule
M 0.0.3 Mechanical Details
M 0.0.4 Mechanical Details
M 1.1.1 Mechanical Floor Plan Meeting Room
M 1.1.2 Mechanical Roof Plan
M 1.1.3 Mechanical Ventilation Calculation

PLUMBING
Plumbing
P 0.0.0 Plumbing Legend and Notes
P 0.0.1 Plumbing Schedules
P 0.0.3 Plumbing Details
P 1.1.1 Plumbing Floor Plan - Waste
P 1.1.2 Plumbing Floor Plan - Waste
P 1.1.3 Plumbing Diagrams
P 1.2.1 Restroom Plumbing Plans/ Diagrams

SITE PLAN KEYNOTES:

1. LINE OF ARENA ABOVE
2. BLEACHERS
3. STRUCTURAL POSTS FOR ARENA STRUCTURE - SEE CONTRACTORS NOTE A 0.0.1
4. ELECTRONIC SCOREBOARD (DUPLICATE)
5. WARM UP TRACK
6. ANNOUNCERS BOOTH
7. STORAGE BELOW BLEACHERS - SEE A 1.7
8. PATIO AREA - SEE A 1.8
9. MEETING ROOM/ KITCHEN - SEE A 1.1
10. RESTROOMS - -SEE A 1.2
11. DUMPSTER AREA WITH CUSTOM COWBOY MURAL - SEE A 1.3
12. MATERIAL WRAP AROUND PERIMETER ARENA FENCING - SEE CONTRACTORS NOTE: A 0.0.1
13. PROPERTY LINE
14. SWALE - SEE CIVIL
15. BLEACHERS FENCING - SEE 1.7
16. ARENA FENCING - SEE CONTRACTORS NOTE A 0.0.1
17. CONCRETE WALK TO BLEACHERS
18. RAISED DONOR PLATFORM
19. PICNIC TABLES - SEE SHEET A 5.2.1
20. TRASH RECEPTICALS - SEE SHEET A 5.2.1

SITE PLAN LEGEND:

- PROPOSED STRUCTURE
- BIOFILTRATION & PLANTING AREA PER CIVIL
- CONCRETE PER CIVIL
- PROPERTY LINE
- FENCE (TYPE #1)
- FENCE (TYPE #2)
- WS - WATER SPIGOT - SEE CIVIL

SHEET: A 1.0.0

North

LICENSED ARCHITECT WARREN W. SCOTT C-011211 11.30.19 RENEWAL DATE STATE OF CALIFORNIA

763 2nd Street
Suite 200
Encinitas California
92024
760.943.8180
www.wsaaia.com
WARREN SCOTT + ARCHITECTURE

1 Area 1 Site Plan
1" = 20'-0"

ISSUE FOR BID - 2/03/2020 NOT FOR CONSTRUCTION

DEPARTMENT OF PARKS AND RECREATION
COUNTY OF SAN DIEGO
5500 OVERLAND DRIVE, SUITE 410 SAN DIEGO, CALIFORNIA 92123
COUNTY OF SAN DIEGO PARKS AND RECREATION

NO.	REVISIONS	APPR.	DATE
Rev	Description		Date

DESIGNED BY: WSA
DRAWN BY: WSA
CHECKED BY: WSA
PROJECT MANAGER: -

LAKESIDE EQUESTRIAN FACILITY
Area 1 - Site Plan

SCALE AS SHOWN | SHEET 5
PROJ. NO. 1020367 | OF
FILE NO. | 68

E:\ClientFiles\PDW\Lakeside Equestrian Center\Construction Drawings\Area 1\Lakeside Equestrian Center_CD-1_Area 1.rvt

-1 0 1 2 3 4 5 6 7 8 9 10

FOR REDUCED PLANS
ORIGINAL SCALE IS IN INCHES

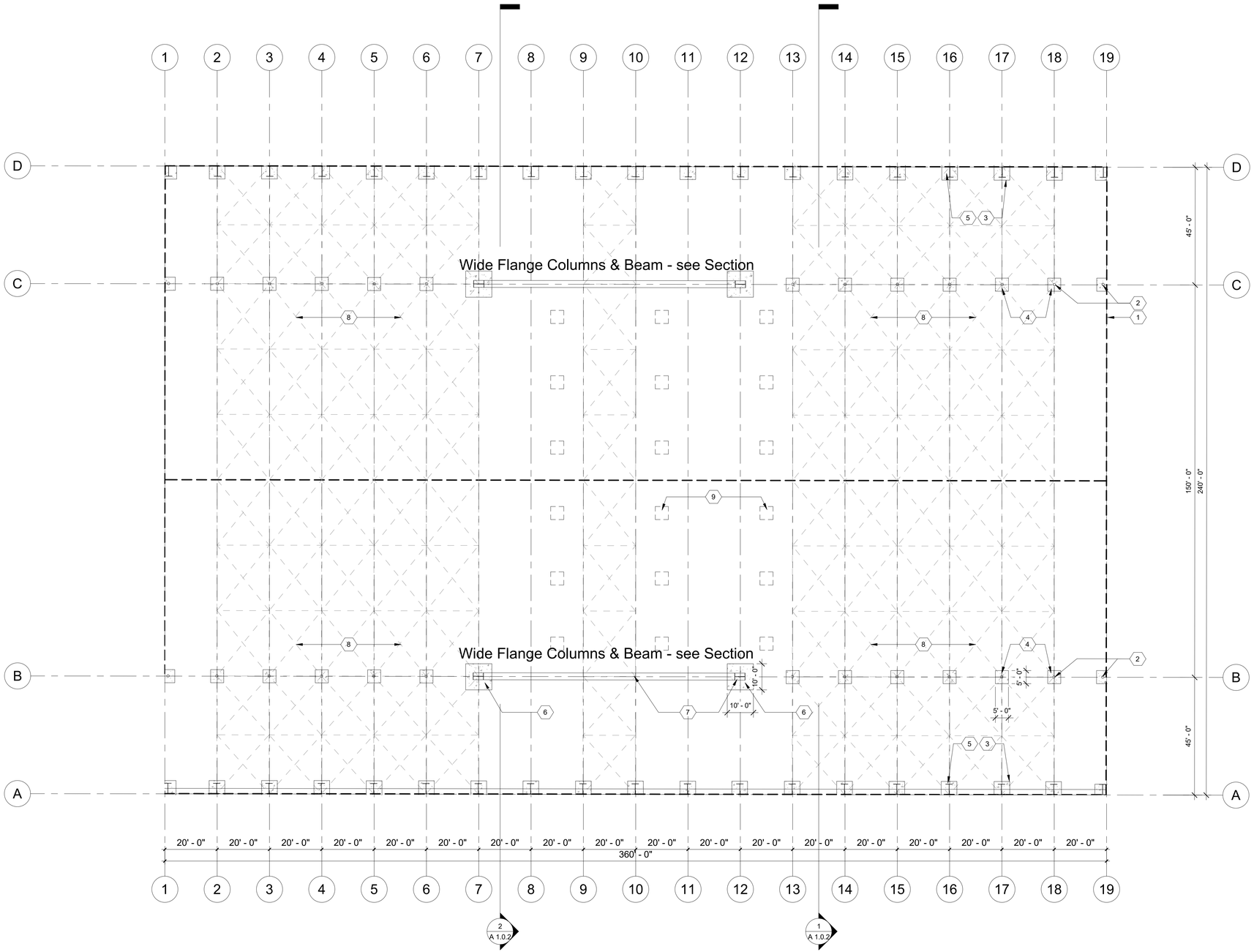

1 **Covered Arena Floor Plan**
1" = 20'-0"

ARENA PLAN KEYNOTES:

1. LINE OF ARENA STRUCTURE ABOVE
2. STRUCTURAL STEEL POSTS PER MANUFACTURE DESIGN
3. STRUCTURAL STEEL RIGID FRAME PER MANUFACTURE DESIGN
4. 5'-0" X 5'-0 X 2'-3" CONCRETE FOOTING PER MANUFACTURE DESIGN
5. 6'-0" X 6'-0 X 2'-6" CONCRETE FOOTING PER MANUFACTURE DESIGN
6. 10'-0" X 10'-0 X 4'-0" CONCRETE FOOTING PER MANUFACTURE DESIGN
7. WIDE FLANGE COLUMN & BEAM
8. ROOF BRACING PER MANUFACTURE DESIGN
9. 5'-0" X 5'-0" METAL FRAMED SKYLIGHTS

ISSUE FOR BID - 2/03/2020 NOT FOR CONSTRUCTION

NOTE:

SKYLIGHTS TO BE INCLUDED IN SHOP DRAWINGS

SHEET: A 1.0.1

North

LICENSED ARCHITECT
WARREN W. SCOTT
C-011211
11.30.19
RENEWAL DATE
STATE OF CALIFORNIA

763 2nd Street
Suite 200
Encinitas California
92024
760.943.8180
www.wsaaia.com

WARREN SCOTT + ARCHITECTURE

DEPARTMENT OF PARKS AND RECREATION
COUNTY OF SAN DIEGO
5500 OVERLAND DRIVE, SUITE 410 SAN DIEGO, CALIFORNIA 92123

COUNTY OF SAN DIEGO PARKS AND RECREATION

NO.	REVISIONS	APPR.	DATE
Rev	Description		Date

DESIGNED BY:	WSA
DRAWN BY:	WSA
CHECKED BY:	WSA
PROJECT MANAGER:	-

LAKESIDE EQUESTRIAN FACILITY

Floor Plan - Covered Arena

SCALE	AS SHOWN
PROJ. NO.	1020367
FILE NO.	
SHEET	6
OF	68

© CivicDrive/WSA - Lakeside Equestrian Center/Construction Drawings/Arch 1/Lakeside Equestrian Center_CD-1_Area-1.rvt

FOR REDUCED PLANS
ORIGINAL SCALE IS IN INCHES

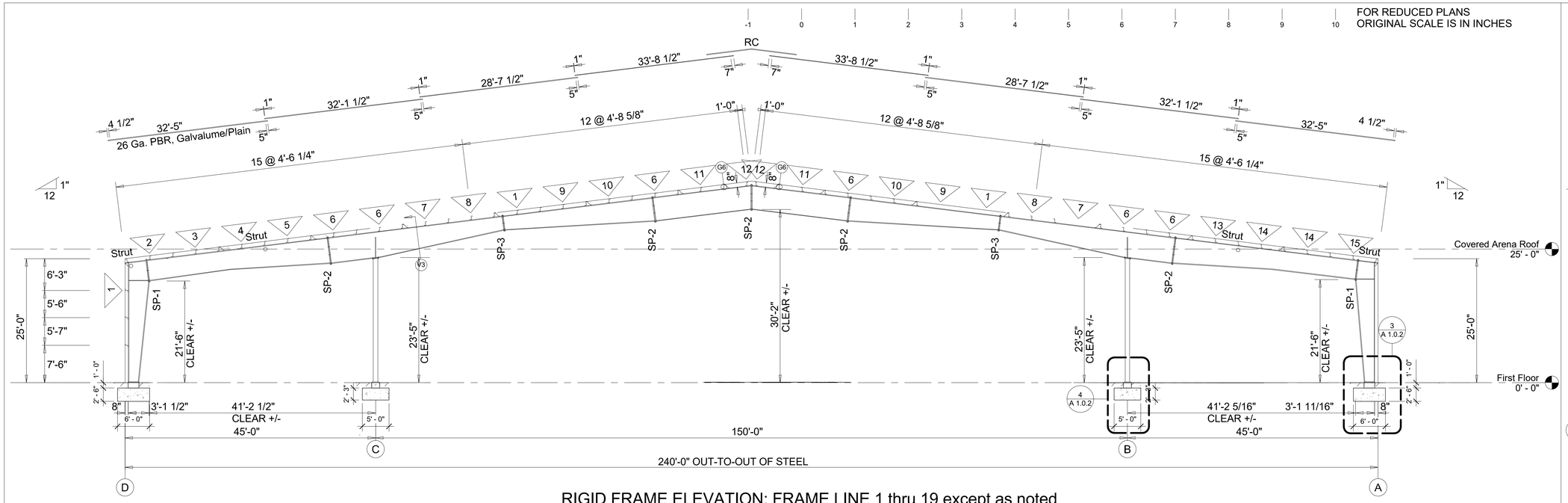

RIGID FRAME ELEVATION: FRAME LINE 1 thru 19 except as noted

1 **Section 1 - Covered Arena**
1" = 10'-0"

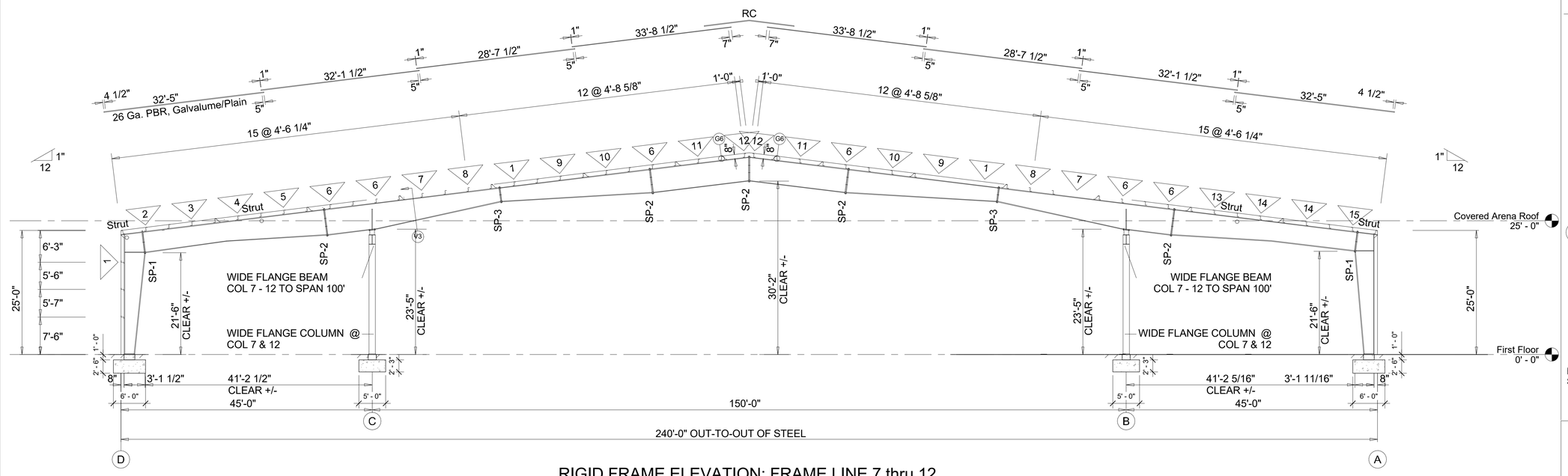

RIGID FRAME ELEVATION: FRAME LINE 7 thru 12

2 **Section 2 - Covered Arena**
1" = 10'-0"

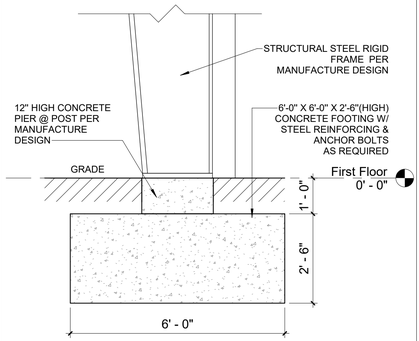

3 **Enlarged Footing Section - Typ. A**
1/2" = 1'-0"

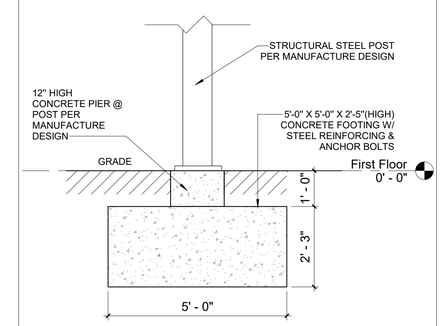

4 **Enlarged Footing Section - Typ. B**
1/2" = 1'-0"

NOTE:
SKYLIGHTS TO BE INCLUDED IN SHOP DRAWINGS

SHEET: A 1.0.2

ISSUE FOR BID - 2/03/2020 NOT FOR CONSTRUCTION

LICENSED ARCHITECT
WARREN W. SCOTT
C-011211
11.30.19
RENEWAL DATE
STATE OF CALIFORNIA

763 2nd Street
Suite 200
Encinitas California
92024
760.943.8180
www.wsaaia.com
WARREN SCOTT + ARCHITECTURE

DEPARTMENT OF PARKS AND RECREATION
COUNTY OF SAN DIEGO
5500 OVERLAND DRIVE, SUITE 410 SAN DIEGO, CALIFORNIA 92123

COUNTY OF SAN DIEGO PARKS AND RECREATION

NO.	REVISIONS	APPR.	DATE
Rev	Description		Date

DESIGNED BY: WSA
DRAWN BY: WSA
CHECKED BY: WSA
PROJECT MANAGER: -

LAKESIDE EQUESTRIAN FACILITY
Elevations/ Sections - Covered Arena

SCALE: AS SHOWN
PROJ. NO. 1020367
FILE NO.
SHEET 7 OF 68

E:\OneDrive\WSA - Lakeside Equestrian Center\Construction Drawings\Area 1\Lakeside Equestrian Center_CD-1_Area-1.rvt

FOR REDUCED PLANS
ORIGINAL SCALE IS IN INCHES

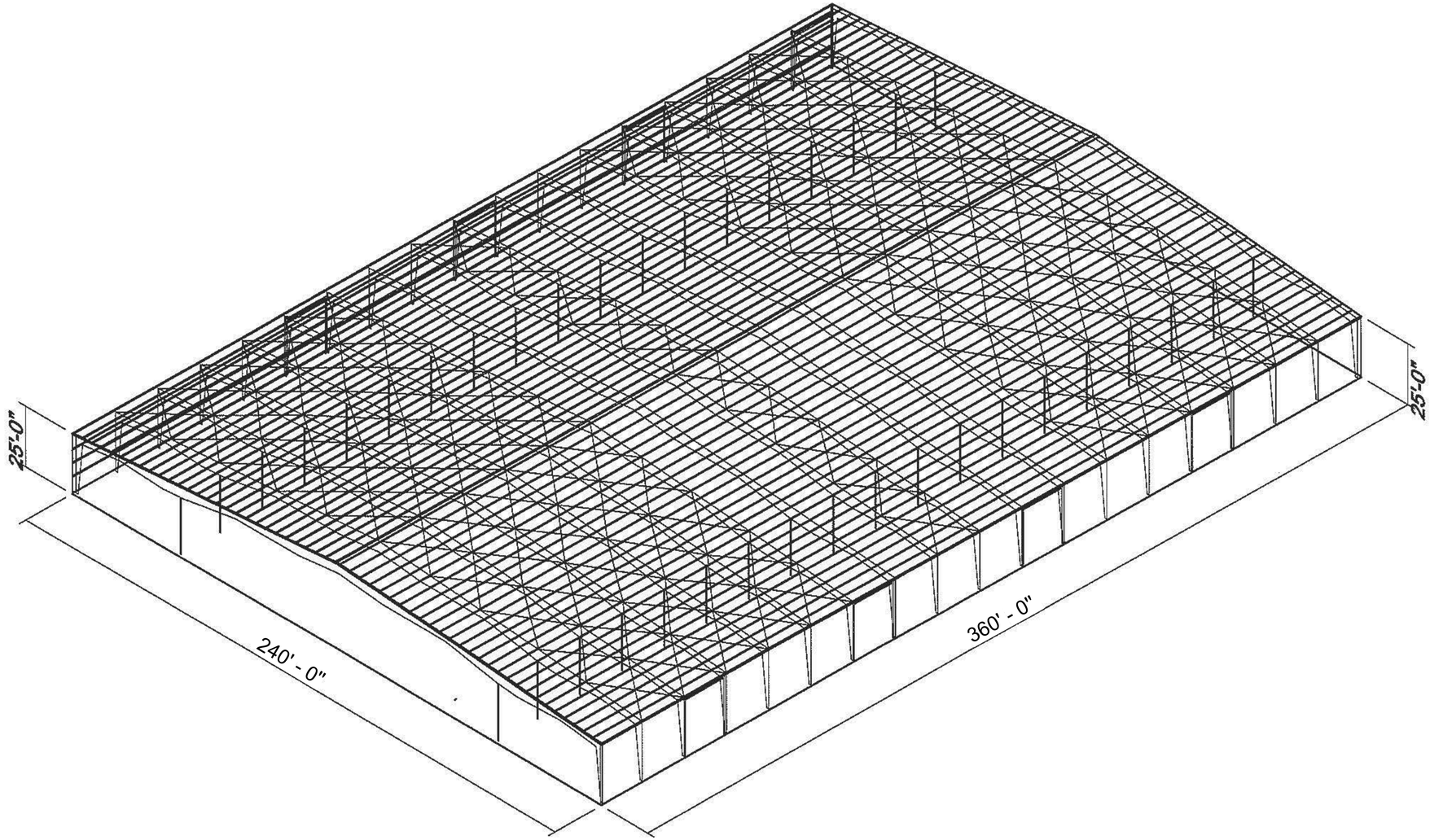

NOTE:
SKYLIGHTS TO BE INCLUDED IN SHOP DRAWINGS

SHEET: A 1.0.3

LICENSED ARCHITECT
WARREN W. SCOTT
C-011211
11.30.19
RENEWAL DATE
STATE OF CALIFORNIA

763 2nd Street
Suite 200
Encinitas California
92024
760.943.8180
www.wsaaia.com
WARREN SCOTT + ARCHITECTURE

ISSUE FOR BID - 2/03/2020 NOT FOR CONSTRUCTION

DEPARTMENT OF PARKS AND RECREATION
COUNTY OF SAN DIEGO
5500 OVERLAND DRIVE, SUITE 410 SAN DIEGO, CALIFORNIA 92123

COUNTY OF SAN DIEGO PARKS AND RECREATION

NO.	REVISIONS	APPR.	DATE
Rev	Description		Date

DESIGNED BY: WSA
DRAWN BY: WSA
CHECKED BY: WSA
PROJECT MANAGER: -

LAKESIDE EQUESTRIAN FACILITY
3D Roof Plan - Covered Arena

SCALE: AS SHOWN
PROJ. NO.: 1020367
FILE NO.:
SHEET: 8 OF 68

E:\OneDrive\WSA - Lakeside Equestrian Center\Construction Drawings\Area 1\Lakeside Equestrian Center_CD-1_Area-1.rvt

FOR REDUCED PLANS
ORIGINAL SCALE IS IN INCHES

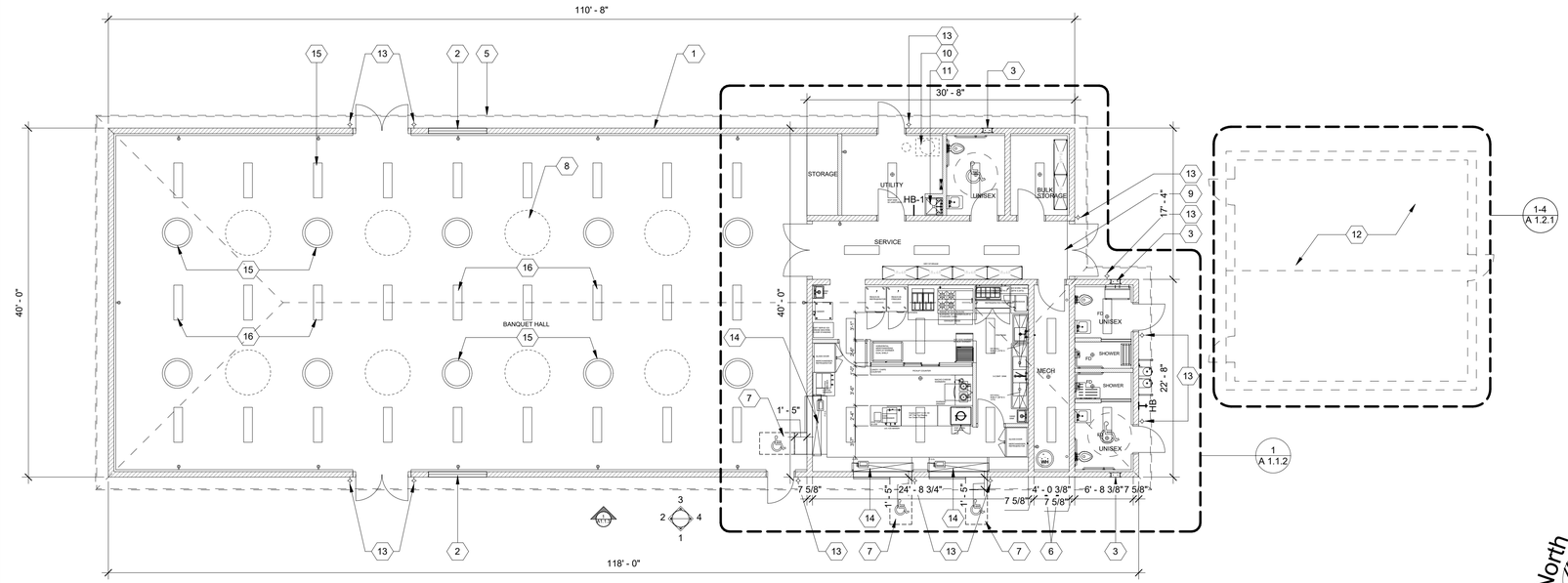

1 Floor Plan - Meeting Room
1/8" = 1'-0"

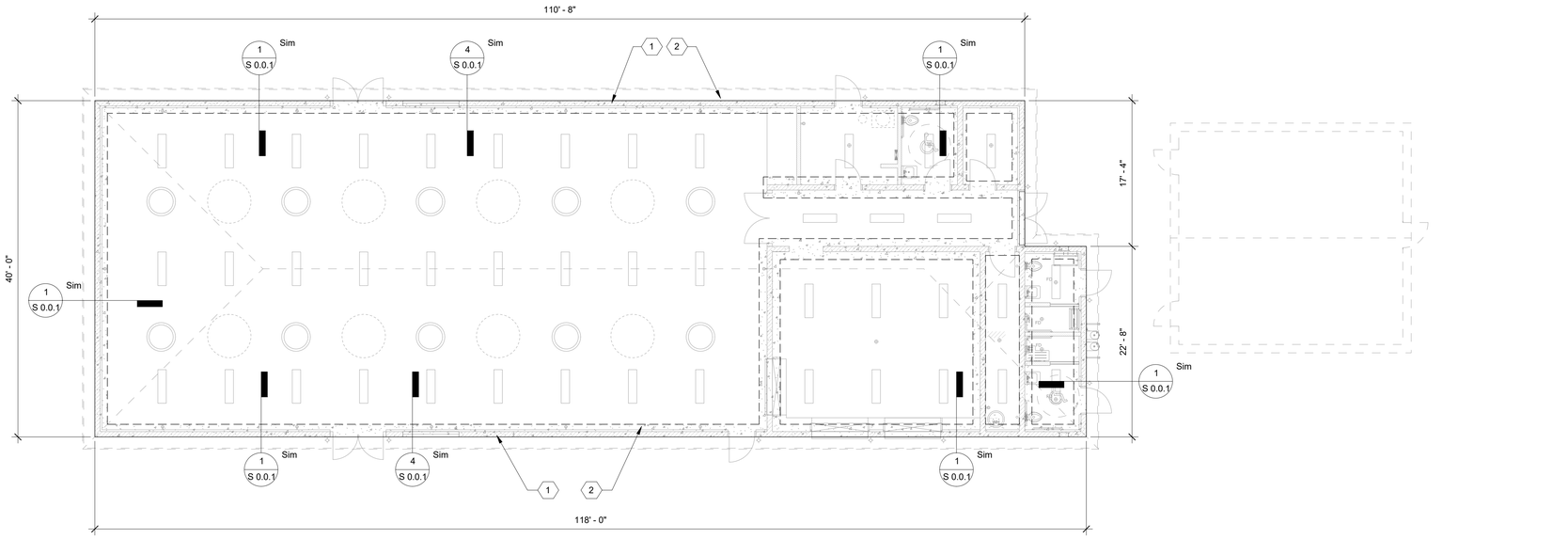

2 Foundation Plan - Meeting Room
1/8" = 1'-0"

LEGEND:

SYMBOL	DESCRIPTION	AREA/ QUANTITY
	EXTERIOR WALL LIGHTS	12
	INTERIOR CEILING LIGHTS	43
	62" CEILING FAN W/LIGHT	8
	FLOOR DRAIN	8
	ELECTRICAL OUTLET	15
HB	WALL HYDRANT	1
HB-1	WALL FAUCET	1
F EF-4	ELECTRIC EXHAUST FAN EXHAUST FAN 70CFM	3
F EF-3	ELECTRIC EXHAUST FAN EXHAUST FAN 210CFM	1
	16" x 24" KICKPROOF WALL VENT	3
TP	TWO ROLL TP DISPENSER	3
ND	NAPKIN DISPENSER	3
SD	SOAP DISPENSER	3
PTD	TOWEL DISPENSER	3
	ELECTRICAL PANEL	1
	SOLATUBE DAYLIGHTING DEVICE	

WALL TYPE SCHEDULE:

8" REINFORCED CONCRETE MASONRY BLOCK WALL WITH MORTAR JOINTS, GROUTED SOLID ALL CELLS RUNNING BOND PATTERN.

6" REINFORCED CONCRETE MASONRY BLOCK WALL WITH MORTAR JOINTS, GROUTED SOLID ALL CELLS RUNNING BOND PATTERN.

CONCRETE SLAB ON GRADE

FLOOR PLAN KEYNOTES:

1. COBBLESTONE SIDING OVER 8"X16" CMU CONCRETE BLOCK WALL RUNNING BOND PATTERN FULLY GROUTED AND REINFORCED
2. 6' - 8" X 3' - 4" WINDOW (TYP.2)
3. KICK PROOF WALL VENTS
4. WALL HYDRANT (HB)
5. LINE OF ROOF ABOVE
6. OUTDOOR WALL MOUNTED DRINKING WATER FOUNTAIN & HOSE BIB
7. ADA ACCESSIBLE SERVICE WINDOW
8. CEILING FAN
9. 6' - 0" X 6' - 8" ROLL-UP DOOR
10. INSTALLER TO INSTALL GREASE TRAP, AS REQUIRED
11. INSTALLER TO INSTALL MOP SINK, AS REQUIRED
12. STAND ALONE RESTROOM BUILDING (SEE SEPARATE PLANS FOR DETAILS)
13. OUTDOOR WALL MOUNTED LIGHTING FIXTURES
14. 6' - 8" X 4' - 0" ROLL-UP CONCESSION WINDOW (TYP. 3)
15. SOLATUBE 330 DS-0 21" DIAM SKYLIGHTS
16. CEILING LIGHT FIXTURES

FOUNDATION PLAN KEYNOTES:

1. COBBLESTONE SIDING OVER 8"X16" CMU CONCRETE BLOCK WALL
2. 24" REINFORCED CONCRETE FOUNDATION - SEE 1/ S 0.0.1 FOR DETAILS
3. 5" REINFORCED CONCRETE SLAB ON GRADE - SEE 1/ S 0.0.1 FOR DETAILS

NOTE:

SEE SHEET # FS 1.2.1 FOR FOOD SERVICE EQUIPMENT SCHEDULE

SHEET: A 1.1.1

LICENSED ARCHITECT
WARREN W. SCOTT
C-011211
11.30.19
RENEWAL DATE
STATE OF CALIFORNIA

763 2nd Street
Suite 200
Encinitas California
92024
760.943.8180
www.wsaaia.com
WARREN SCOTT + ARCHITECTURE

ISSUE FOR BID - 2/03/2020 NOT FOR CONSTRUCTION

DEPARTMENT OF PARKS AND RECREATION
COUNTY OF SAN DIEGO
5500 OVERLAND DRIVE, SUITE 410 SAN DIEGO, CALIFORNIA 92123

COUNTY OF SAN DIEGO PARKS AND RECREATION

NO.	REVISIONS	APPR.	DATE
Rev	Description		Date

DESIGNED BY: WSA
DRAWN BY: WSA
CHECKED BY: WSA
PROJECT MANAGER: -

LAKESIDE EQUESTRIAN FACILITY
Floor Plan - Meeting Room/ Kitchen

SCALE: AS SHOWN
PROJ. NO. 1020367
FILE NO.
SHEET 9 OF 68

E:\OneDrive\WSA - Lakeside Equestrian Center\Construction Drawings\Area 1\Lakeside Equestrian Center_CD-1_Area-1.rvt

-1 0 1 2 3 4 5 6 7 8 9 10

FOR REDUCED PLANS
ORIGINAL SCALE IS IN INCHES

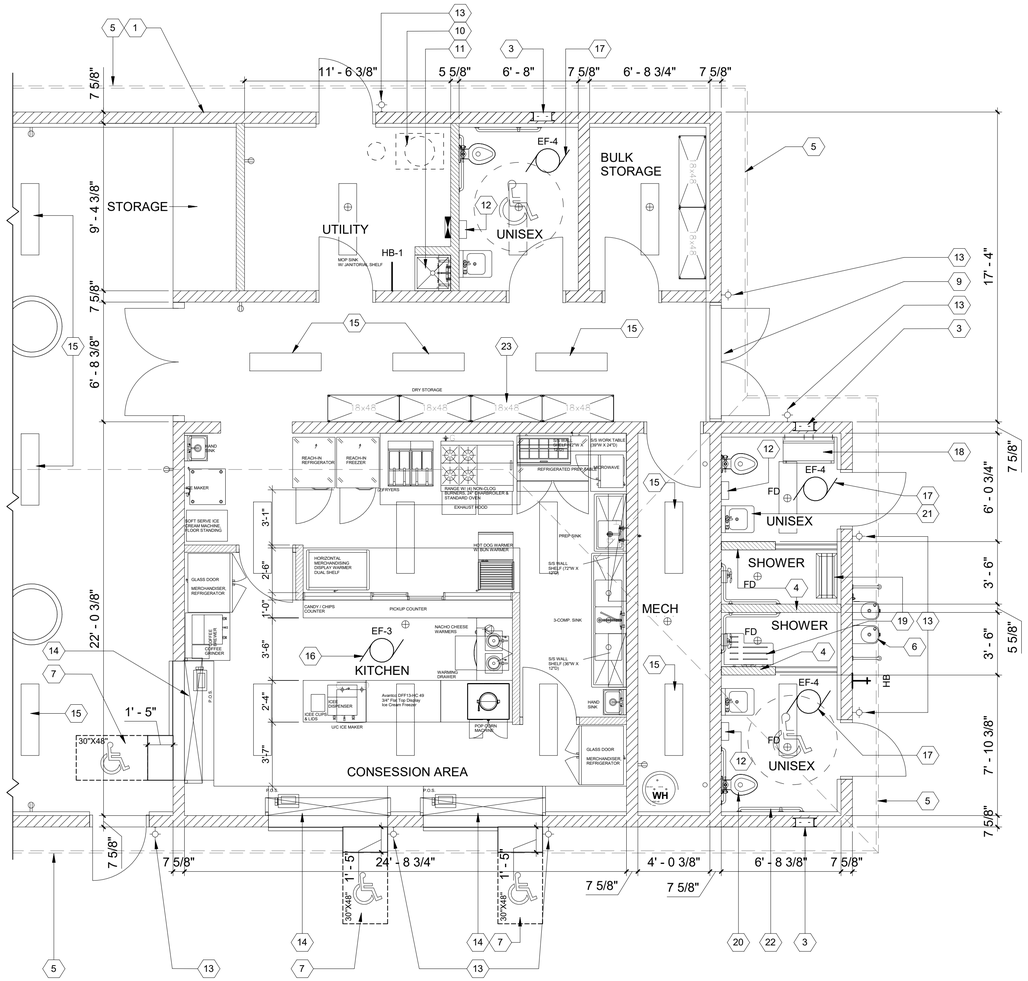

1 **Enlarged Floor Plan - Meeting Room**
1/4" = 1'-0"

LEGEND:

SYMBOL	DESCRIPTION	AREA/ QUANTITY
	EXTERIOR WALL LIGHTS	12
	INTERIOR CEILING LIGHTS	43
	62" CEILING FAN W/LIGHT	8
	FLOOR DRAIN	8
	ELECTRICAL OUTLET	15
HB	WALL HYDRANT	1
HB-1	WALL FAUCET	1
F EF-4	ELECTRIC EXHAUST FAN EXHAUST FAN 70CFM	3
F EF-3	ELECTRIC EXHAUST FAN EXHAUST FAN 210CFM	1
	16" x 24" KICKPROOF WALL VENT	3
TP	TWO ROLL TP DISPENSER	3
ND	NAPKIN DISPENSER	3
SD	SOAP DISPENSER	3
PTD	TOWEL DISPENSER	3
	ELECTRICAL PANEL	1

WALL TYPE SCHEDULE:

8" REINFORCED CONCRETE MASONRY BLOCK WALL WITH MORTAR JOINTS, GROUTED SOLID ALL CELLS RUNNING BOND PATTERN.

6" REINFORCED CONCRETE MASONRY BLOCK WALL WITH MORTAR JOINTS, GROUTED SOLID ALL CELLS RUNNING BOND PATTERN.

FLOOR PLAN KEYNOTES:

1. COBBLESTONE SIDING OVER 8"X16" CMU CONCRETE BLOCK WALL RUNNING BOND PATTERN FULLY GROUTED AND REINFORCED
2. 6' - 8" X 3' - 4" WINDOW (TYP.2)
3. KICK PROOF WALL VENTS
4. 6" REINFORCED CONCRETE MASONRY BLOCK WALL
5. LINE OF ROOF ABOVE
6. OUTDOOR WALL MOUNTED DRINKING WATER FOUNTAIN
7. ADA ACCESSIBLE SERVICE WINDOW
8. CEILING FAN
9. 6' - 0" X 6' - 8" EXTERIOR DOUBLE DOOR
10. INSTALLER TO INSTALL GREASE TRAP, AS REQUIRED - SEE PLUMBING
11. INSTALLER TO INSTALL MOP SINK, AS REQUIRED - SEE PLUMBING
12. HAND DRYER - SEE ELECTRICAL
13. OUTDOOR WALL MOUNTED LIGHTING FIXTURES - SEE STRUCTURAL
14. 6' - 8" X 4' - 0" ROLL-UP CONCESSION WINDOW (TYP. 3)
15. CEILING LIGHTING FIXTURES (L = 4' - 0") - SEE ELECTRICAL
16. KITCHEN EXHAUST FAN (3) - SEE MACHANICAL
17. RESTROOM EXHAUST FAN (4) - SEE MECHANICAL
18. BABY CHANGING STATION
19. FOLDING WALL SHOWER BENCH
20. LOW FLOW ACCESSIBLE TOILET
21. WALL MOUNTED SINK WITH LOW FLOW FAUCET WITH AUTOMATIC SENSOR WITH SELF SHUT-OFF
22. STAINLESS STEEL GRAB BARS, 1-1/4" DIA., 42" MIN. LENGTH AT SIDE, 36" MIN. LENGTH AT REAR, MOUNTED TO SUPPORT 250 LBS MIN.
23. 1' - 6" X 4' - 0" DRY STORAGE - SEE F.S. DRAWINGS

FINISH NOTES

1. ALL INTERIOR WALL SURFACES TO RECEIVE STANDARD WHITE FRP (EXCEPT @ S.S WALLS BEHIND COOKING EQUIPMENT) FULL HEIGHT TO FACE OF PROVIDE WALL PREP/ MATERIAL AS REQUIRED FOR FRP APPLICATION
2. KITCHEN AND CONCESSION 2X4 AREA (ONLY) TO BE PROVIDED W/STANDARD 15/16" ACOUSTIC TILE GRID & CEILING W/WASHABLE CEILING TILE TO MEET HEALTH DEPARTMENT STANDARDS
3. ALL OTHER AREAS TO BE OPEN TO STRUCTURE ABOVE
4. KITCHEN AND CONCESSION AREA (ONLY) TO BE PROVIDED WITH HEALTH DEPARTMENT APPROVED COVE BASE @ ALL WALLS AND HEALTH DEPARTMENT APPROVED CONCRETE SEALER
5. ALL OTHER AREAS TO RECEIVE CONCRETE SEALER AND FINISH PER SPECIFICATIONS
6. ALL CONDITIONED AREAS TO BE PROVIDED WITH R-19 RIGID FULL FACED INSULATION SECURED TO UNDERSIDE OF METAL ROOF

SHEET: A 1.1.2

North

LICENSED ARCHITECT
WARREN W. SCOTT
C-011211
11.30.19
RENEWAL DATE
STATE OF CALIFORNIA

763 2nd Street
Suite 200
Encinitas California
92024
760.943.8180
www.wsaaia.com
WARREN SCOTT + ARCHITECTURE

ISSUE FOR BID - 2/03/2020 NOT FOR CONSTRUCTION

DEPARTMENT OF PARKS AND RECREATION
COUNTY OF SAN DIEGO
5500 OVERLAND DRIVE, SUITE 410 SAN DIEGO, CALIFORNIA 92123

COUNTY OF SAN DIEGO PARKS AND RECREATION

NO.	REVISIONS	APPR.	DATE
Rev	Description		Date

DESIGNED BY: WSA
DRAWN BY: WSA
CHECKED BY: WSA
PROJECT MANAGER: -

LAKESIDE EQUESTRIAN FACILITY

Enlarged Floor Plan - Meeting Room/ Kitchen

SCALE AS SHOWN
PROJ. NO. 1020367
FILE NO.
SHEET 10 OF 68

E:\Archive\WSA - Lakeside Equestrian Center\Construction Drawings\Arc 1\Lakeside Equestrian Center_CD 1_Arc 1.rvt

FOR REDUCED PLANS
ORIGINAL SCALE IS IN INCHES

THESE PLAN VIEW AND ELEVATION DRAWINGS ARE A PRELIMINARY ARCHITECTURAL REPRESENTATION OF THE BUILDING. ALL DIMENSIONS, FEATURES AND COMPONENTS SHOWN ON THESE PRELIMINARY DRAWINGS ARE TO BE PART OF THE QUOTE. PLEASE REFER TO THE SPECIFICATIONS FOR ADDITIONAL SCOPE OF WORK.

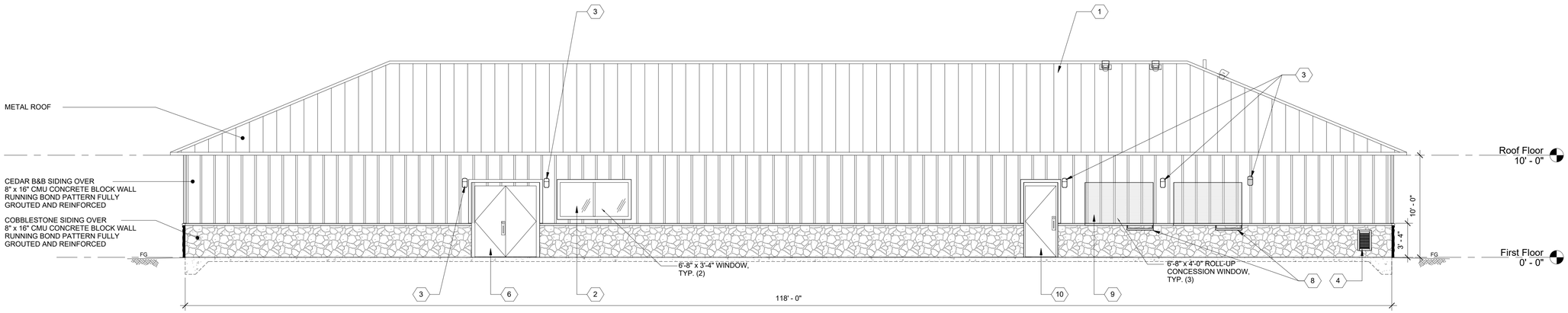

1 **Meeting Room Elevation - C**
3/16" = 1'-0"

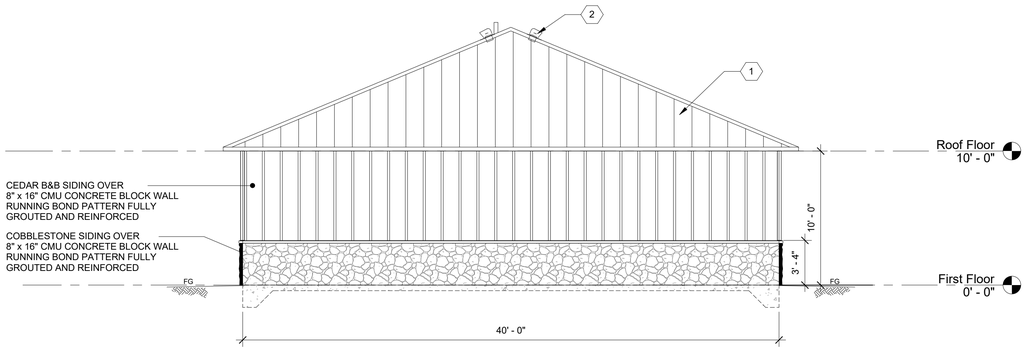

2 **Meeting Room elevation - D**
3/16" = 1'-0"

ELEVATIONS KEYNOTES:

1. METAL ROOF
2. 6' - 8" X 3' - 4" WINDOW (TYP.2)
3. EXTERIOR WALL LIGHTS
4. KICK PROOF WALL VENTS
5. WALL HYDRANT (HB)
6. EXTERIOR DOUBLE DOOR
7. OUTDOOR WALL MOUNTED DRINKING WATER FOUNTAIN
8. SERVICE COLUMN FOR ADA - 2'-10"
9. 6' - 8" X 4' - 0" ROLL-UP CONCESSION WINDOW (TYP. 3)
10. 3'-0" X 6'-0" EXTERIOR DOOR & FRAME

ISSUE FOR BID - 2/03/2020 NOT FOR CONSTRUCTION

CONTRACTOR NOTES

1. STAIN / PAINT FOR CEDAR SIDING TO BE INCLUDED IN CONTRACTOR PRICING - COLORS TO BE DETERMINED
2. CONTRACTOR TO PROVIDE PHOTOS AND/ OR SAMPLES OF ALL BUILDINGS MATERIALS (SIDING, CABBLE, ROOF, etc...) FOR COUNTY REVIEW & APPROVAL FOR ALL STRUCTURES

SHEET: A 1.1.3

LICENSED ARCHITECT
WARREN W. SCOTT
C-011211
11.30.19
RENEWAL DATE
STATE OF CALIFORNIA

763 2nd Street
Suite 200
Encinitas California
92024
760.943.8180
www.wsaaia.com
WARREN SCOTT + ARCHITECTURE

DEPARTMENT OF PARKS AND RECREATION
COUNTY OF SAN DIEGO
5500 OVERLAND DRIVE, SUITE 410 SAN DIEGO, CALIFORNIA 92123

COUNTY OF SAN DIEGO PARKS AND RECREATION

NO.	REVISIONS	APPR.	DATE
Rev	Description		Date

DESIGNED BY: WSA
DRAWN BY: WSA
CHECKED BY: WSA
PROJECT MANAGER: -

LAKESIDE EQUESTRIAN FACILITY
Elevations/ Sections - Meeting Room/ Kitchen

SCALE: AS SHOWN
PROJ. NO.: 1020367
FILE NO.:
SHEET: 11 OF 68

E:\OneDrive\WSA - Lakeside Equestrian Center\Construction Drawings\Area 1\Lakeside Equestrian Center_CD-1_Area-1.rvt

THESE PLAN VIEW AND ELEVATION DRAWINGS ARE A PRELIMINARY ARCHITECTURAL REPRESENTATION OF THE BUILDING. ALL DIMENSIONS, FEATURES AND COMPONENTS SHOWN ON THESE PRELIMINARY DRAWINGS ARE TO BE PART OF THE QUOTE. PLEASE REFER TO THE SPECIFICATIONS FOR ADDITIONAL SCOPE OF WORK.

ELECTRICAL PANEL	1

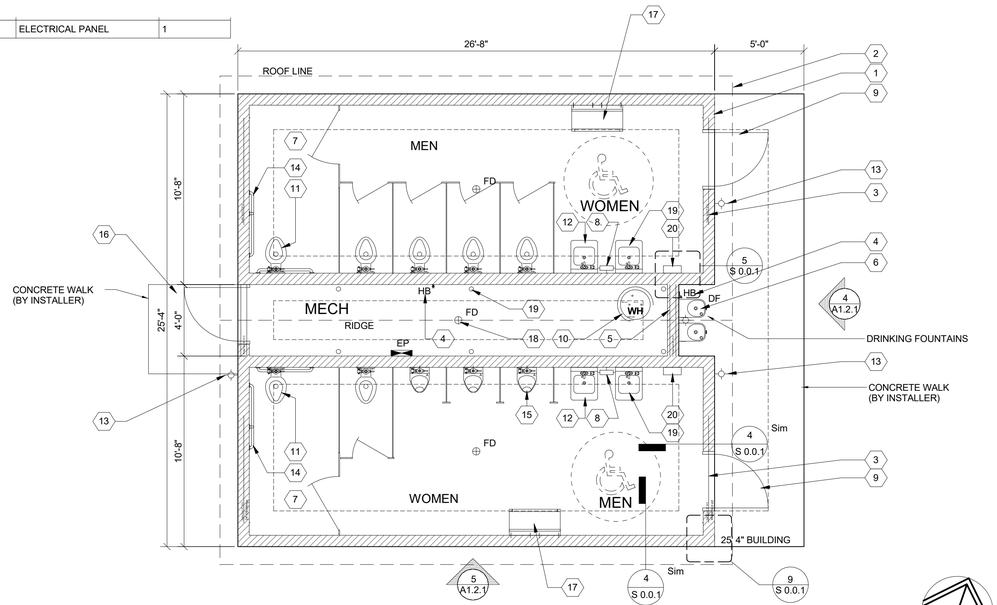

1 Floor Plan - Restrooms
1/4" = 1'-0"

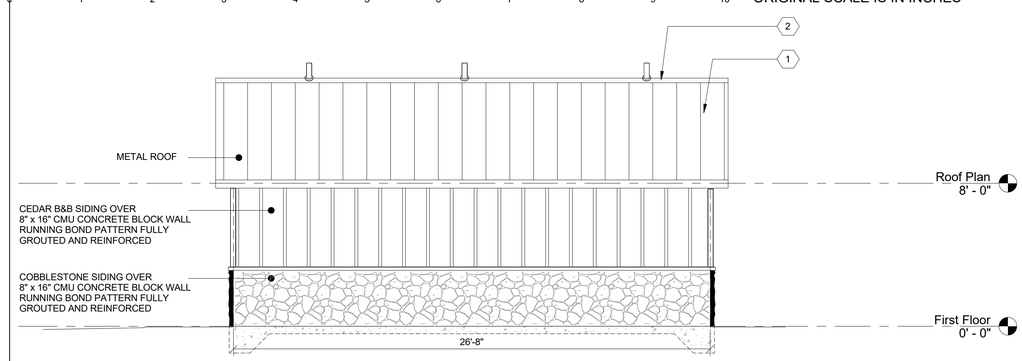

5 Restrooms Elevation - B
1/4" = 1'-0"

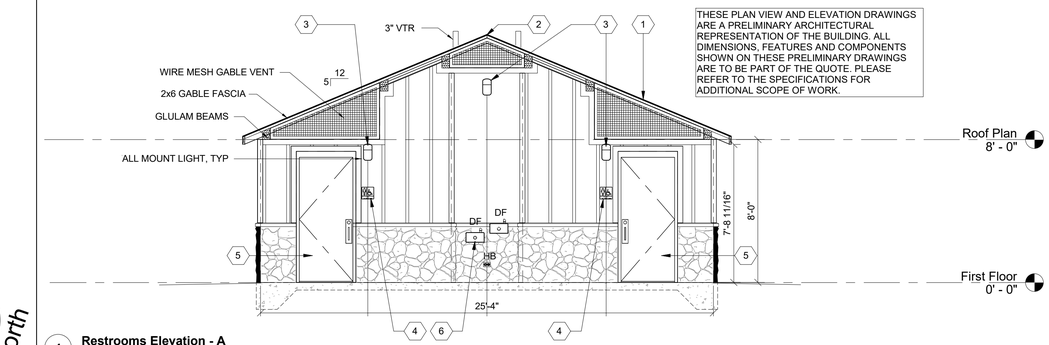

THESE PLAN VIEW AND ELEVATION DRAWINGS ARE A PRELIMINARY ARCHITECTURAL REPRESENTATION OF THE BUILDING. ALL DIMENSIONS, FEATURES AND COMPONENTS SHOWN ON THESE PRELIMINARY DRAWINGS ARE TO BE PART OF THE QUOTE. PLEASE REFER TO THE SPECIFICATIONS FOR ADDITIONAL SCOPE OF WORK.

4 Restrooms Elevation - A
1/4" = 1'-0"

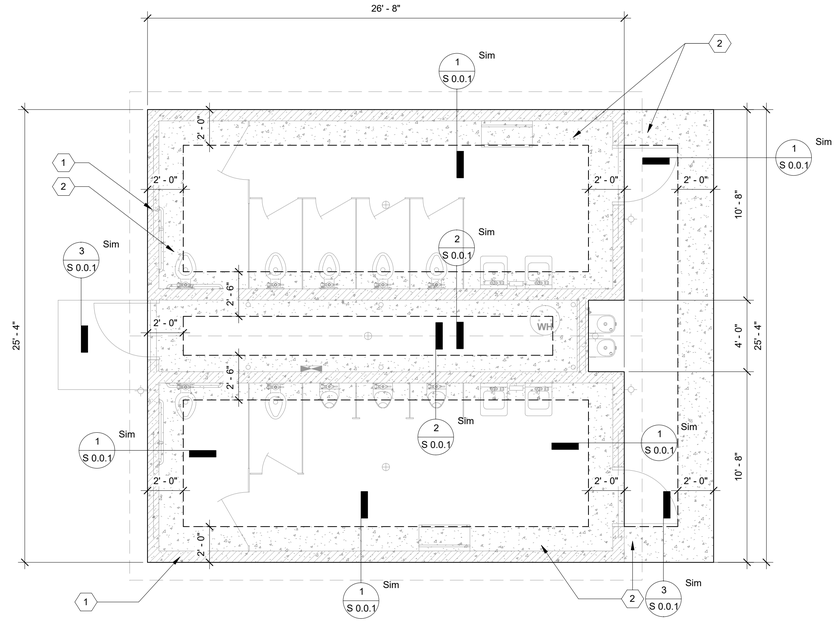

2 Foundation Plan - Restrooms
1/4" = 1'-0"

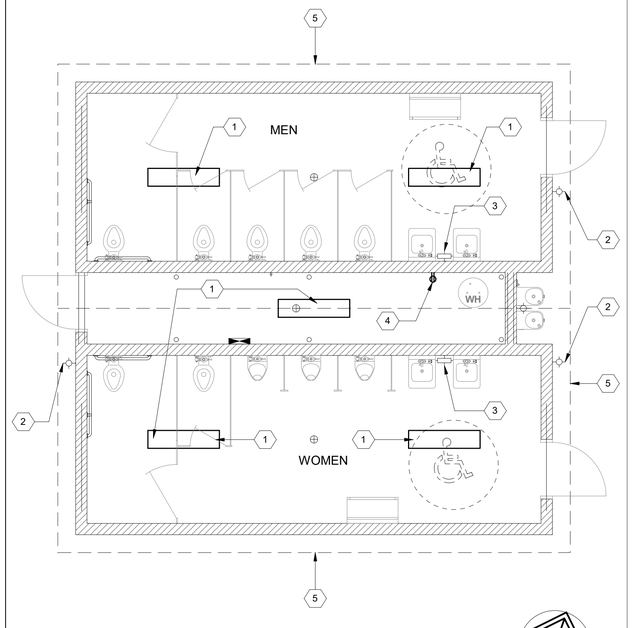

3 Ceiling Plan - Restrooms
1/4" = 1'-0"

LEGEND:

SYMBOL	DESCRIPTION	AREA/ QUANTITY
	GABLE VENT	4
	RIDGE VENT	2
	EXTERIOR WALL LIGHTS	4
	INTERIOR WALL LIGHTS	2
	INTERIOR CEILING LIGHTS	5
	FLOOR DRAIN	3
	ELECTRICAL OUTLET	1
	ELECTRICAL PANEL	1

WALL TYPE SCHEDULE:

8" REINFORCED CONCRETE MASONRY BLOCK WALL WITH MORTAR JOINTS, GROUTED SOLID ALL CELLS RUNNING BOND PATTERN.

CONCRETE SLAB ON GRADE

ELEVATIONS KEYNOTES:

1. METAL ROOF
2. RIDGE VENT
3. EXTERIOR WALL MOUNTED LIGHTING FIXTURE
4. RESTROOM ACCESSIBILITY SIGN
5. EXTERIOR RESTROOM DOOR
6. EXTERIOR WALL MOUNTED DRINKING WATER FOUNTAIN

FLOOR PLAN KEYNOTES:

1. COBBLESTONE SIDING OVER 8"X16" CMU CONCRETE BLOCK WALL RUNNING BOND PATTERN FULLY GROUTED AND REINFORCED
2. LINE OF ROOF ABOVE
3. GABLE VENT
4. WALL HYDRANT (HB)
5. RIDGE VENT
6. EXTERIOR WALL MOUNTED DRINKING WATER FOUNTAIN
7. ADA RESTROOM
8. INTERIOR WALL MOUNTED LIGHTING FIXTURE
9. EXTERIOR RESTROOM DOOR
10. WATER HEATER
11. LOW FLOW ACCESSIBLE TOILET
12. WALL MOUNTED SINK WITH LOW FLOW FAUCET WITH AUTOMATIC SENSOR WITH SELF SHUT-OFF
13. EXTERIOR WALL MOUNTED LIGHTING FIXTURE
14. STAINLESS STEEL GRAB BARS, 1-1/4" DIA., 42" MIN. LENGTH AT SIDE, 36" MIN. LENGTH AT REAR, MOUNTED TO SUPPORT 250 LBS MIN.
15. WALL MOUNTED URINAL
16. CONCRETE WALK
17. BABY CHANGING STATION
18. FLOOR DRAIN
19. PLUMBING VENT
20. HAND DRYER

FOUNDATION PLAN KEYNOTES:

1. COBBLESTONE SIDING OVER 8"X16" CMU CONCRETE BLOCK WALL RUNNING BOND PATTERN FULLY GROUTED AND REINFORCED
2. CONCRETE FOUNDATION

CEILING PLAN KEYNOTES:

1. CEILING LIGHTING FIXTURES (L = 4' - 0")
2. EXTERIOR WALL MOUNTED LIGHTING FIXTURE
3. INTERIOR WALL MOUNTED LIGHT
4. POWER DATA
5. LINE OF ROOF ABOVE

SHEET: A 1.2.1

FOR REDUCED PLANS
ORIGINAL SCALE IS IN INCHES

ISSUE FOR BID - 2/03/2020 NOT FOR CONSTRUCTION

WARREN W. SCOTT C-011211 11.30.19 RENEWAL DATE
LICENSED ARCHITECT STATE OF CALIFORNIA

763 2nd Street
Suite 200
Encinitas California
92024
760.943.8180
www.wsaaia.com

WARREN SCOTT + ARCHITECTURE

DEPARTMENT OF PARKS AND RECREATION
COUNTY OF SAN DIEGO
5500 OVERLAND DRIVE, SUITE 410 SAN DIEGO, CALIFORNIA 92123

COUNTY OF SAN DIEGO PARKS AND RECREATION

NO.	REVISIONS	APPR.	DATE
Rev	Description		Date

DESIGNED BY:	WSA
DRAWN BY:	WSA
CHECKED BY:	WSA
PROJECT MANAGER:	-

LAKESIDE EQUESTRIAN FACILITY
Floor Plans/ Elevations - Restrooms

SCALE	AS SHOWN
PROJ. NO.	1020367
FILE NO.	
SHEET	12
OF	68

E:\ChaDrive\WSA - Lakeside Equestrian Center\Construction Drawings\Arc 1\Lakeside Equestrian Center_CD-1_Arch 1.rvt

FOR REDUCED PLANS
ORIGINAL SCALE IS IN INCHES

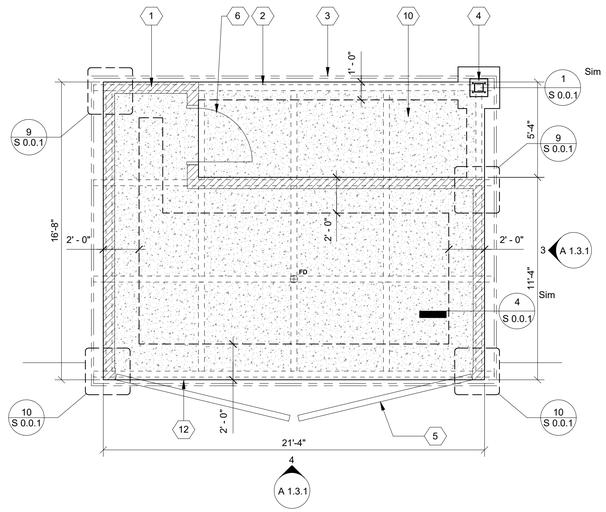

1 **Floor Plan - Dumpster Area**
1/4" = 1'-0"

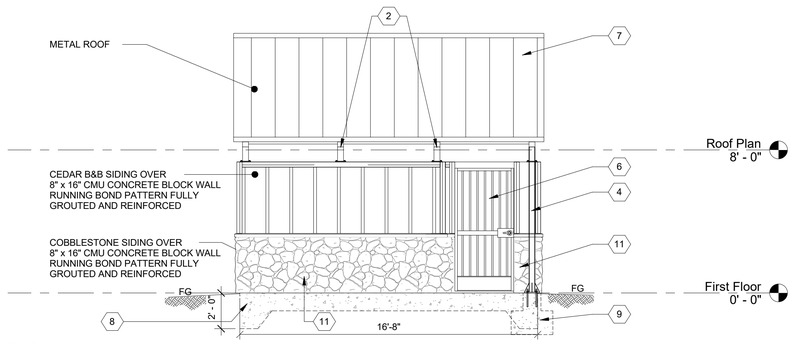

3 **Elevation - B - Dumpster Area**
1/4" = 1'-0"

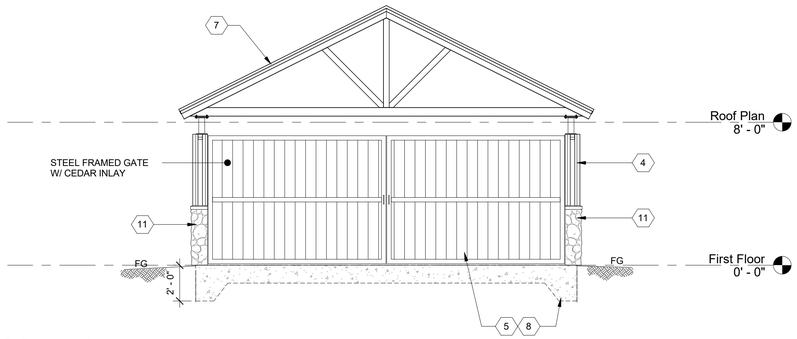

4 **Elevation C - Dumpster Area**
1/4" = 1'-0"

DUMPSTER AREA KEYNOTES:

1. 8" REINFORCED CONCRETE MASONRY BLOCK WALL
2. METAL STRUCTURE ABOVE
3. LINE OF ROOF ABOVE
4. COLUMN W/ 24 X 24 X 8" CONCRETE FOOTING
5. STEEL FRAMED GATE W/ CEDAR INLAY. COWBOY MURAL PANELS (BY OTHERS) TO BE INSTALLED ON GATE FACE
6. 3'-0" X 6'-8" DOOR & FRAME
7. METAL ROOF
8. CONCRETE FOUNDATION
9. CONCRETE FOOTING
10. CONCRETE SLAB ON GRADE
11. COBBLESTONE
12. EDGE CONCRETE SLAB

ISSUE FOR BID - 2/03/2020 NOT FOR CONSTRUCTION

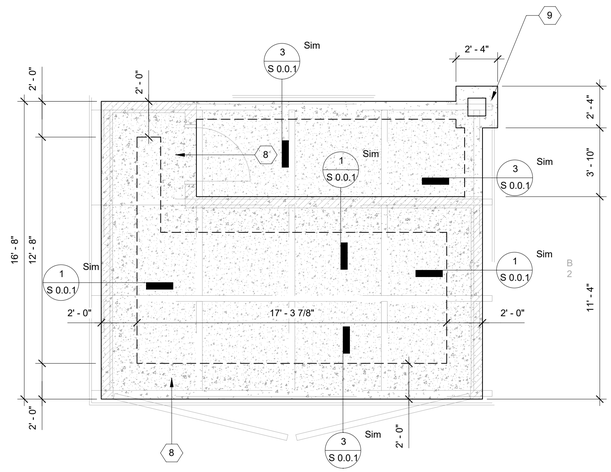

2 **Foundation Plan - Dumpster Area**
1/4" = 1'-0"

COWBOY MURAL NOTES:

1. GATES TO BE DESIGNED TO SUPPORT (2) EA PAINTED PLYWOOD, PANELS TO BE INSTALLED ON FACE OF GATE STEEL
2. PANELS TO BE REINEVABLE FOR FUTURE RELOCATION
3. CONTRACTOR TO ENGAGE LAKESIDE ARTIST DAVID BARRA - 619/ 390-7759; davidartist@clox.net
4. CONTRACTOR TO INCLUDE ALLOWANCE OF $ 2,500.00 FOR MURAL DESIGN AND $ 5,000.00 FOR MURAL INSTALLATION

WALL TYPE SCHEDULE

8" REINFORCED CONCRETE MASONRY BLOCK WALL WITH MORTAR JOINTS, GROUTED SOLID ALL CELLS RUNNING BOND PATTERN.

SHEET: A 1.3.1

LICENSED ARCHITECT
WARREN W. SCOTT
C-011211
11.30.19
RENEWAL DATE
STATE OF CALIFORNIA

763 2nd Street
Suite 200
Encinitas California
92024
760.943.8180
www.wsaaia.com
WARREN SCOTT + ARCHITECTURE

DEPARTMENT OF PARKS AND RECREATION
COUNTY OF SAN DIEGO
5500 OVERLAND DRIVE, SUITE 410 SAN DIEGO, CALIFORNIA 92123

COUNTY OF SAN DIEGO PARKS AND RECREATION

NO.	REVISIONS	APPR.	DATE
Rev	Description		Date

DESIGNED BY: WSA
DRAWN BY: WSA
CHECKED BY: WSA
PROJECT MANAGER: -

LAKESIDE EQUESTRIAN FACILITY
Floor Plan/ Elevations - Dumpster Area

SCALE: AS SHOWN
PROJ. NO. 1020367
FILE NO.
SHEET 13 OF 68

E:\OneDrive\WSA - Lakeside Equestrian Center\Construction Drawings\Area 1\Lakeside Equestrian Center_CD-1_Area-1.rvt

-1 0 1 2 3 4 5 6 7 8 9 10

FOR REDUCED PLANS
ORIGINAL SCALE IS IN INCHES

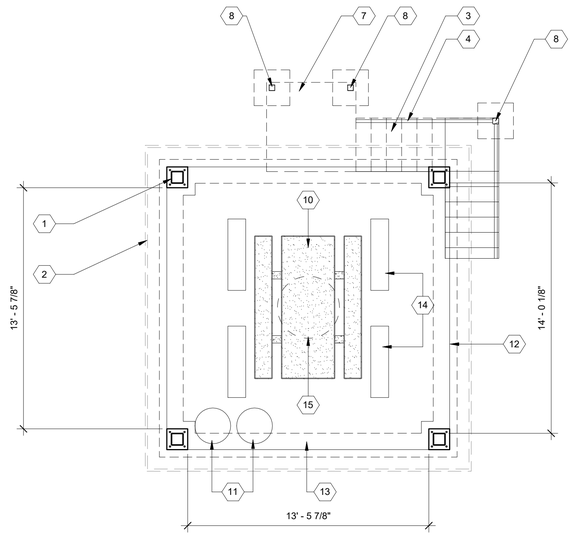

1 **First Floor Plan - Announcers Booth**
1/4" = 1'-0"

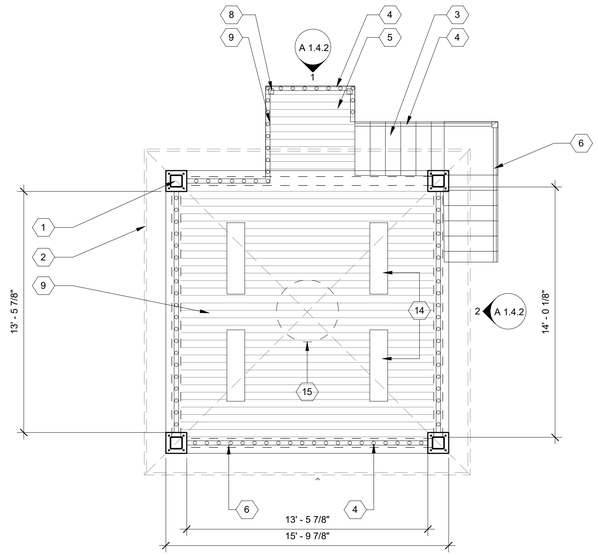

2 **Floor Plan - Announcers Second**
1/4" = 1'-0"

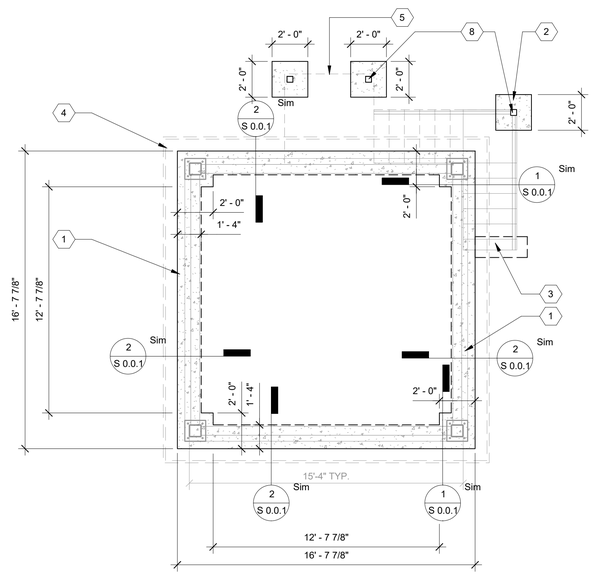

3 **Foundation Plan - Announcers Booth**
1/4" = 1'-0"

FLOOR PLAN KEYNOTES:

1. 8" X 8" METAL POST & BASE PLATE
2. LINE OF ROOF ABOVE
3. PREFAB. STEEL STAIRS BY INSTALLER
4. PREFAB. STEEL RAILINGS BY INSTALLER
5. PREFAB. STAIR LANDING (BY INSTALLER)
6. PREFAB. STAIR/ RAILINGS BY OTHERS
7. STAIRS LANDING ABOVE (BY INSTALLER)
8. 4 X 4 STEEL POST
9. 2 X 8 P.T. WOOD DECK W/TREX DECKING (OR APPROVED EQUAL)
10. PICNIC TABLE
11. TRASH & RECYCLING
12. 5" CONCRETE SLAB W/12" EDGE
13. LINE OF FLOOR BEAMS
14. CEILING LIGHTING FIXTURES
15. CEILING EXHAUST FAN

FOUNDATION PLAN KEYNOTES:

1. 12" CONCRETE SLAB EDGE
2. 24" X 24" CONCRETE FOOTING
3. STEEL STAIR BY INSTALLER ABOVE
4. LINE OF ROOF ABOVE
5. STAIRS LANDING ABOVE
6. 20" X 20" 8" CONCRETE STAIN (LANDING FOOTING)
7. 12" X 42" X 8" CONCRETE STAIR FOOTING
8. 4 X 4 STEEL POST & BASE PLATE

FLOOR PLAN NOTES:

THESE PLAN VIEW AND ELEVATION DRAWINGS ARE A PRELIMINARY ARCHITECTURAL REPRESENTATION OF THE BUILDING. ALL DIMENSIONS, FEATURES AND COMPONENTS SHOWN ON THESE PRELIMINARY DRAWINGS MAY OR MAY NOT BE PART OF THE QUOTE. PLEASE REFER TO THE "SCOPE OF SUPPLY AND SERVICES" LETTER PROVIDED WITH YOUR QUOTE FOR ROMTEC'S PROPOSED SCOPE OF SUPPLY.

SHEET: A 1.4.1

LICENSED ARCHITECT
WARREN W. SCOTT
C-011211
11.30.19
RENEWAL DATE
STATE OF CALIFORNIA

763 2nd Street
Suite 200
Encinitas California
92024
760.943.8180
www.wsaala.com

WARREN SCOTT + ARCHITECTURE

ISSUE FOR BID - 2/03/2020 NOT FOR CONSTRUCTION

DEPARTMENT OF PARKS AND RECREATION
COUNTY OF SAN DIEGO
5500 OVERLAND DRIVE, SUITE 410 SAN DIEGO, CALIFORNIA 92123

COUNTY OF SAN DIEGO PARKS AND RECREATION

NO.	REVISIONS	APPR.	DATE
Rev	Description		Date

DESIGNED BY:	WSA
DRAWN BY:	WSA
CHECKED BY:	WSA
PROJECT MANAGER:	-

LAKESIDE EQUESTRIAN FACILITY

First/ Second Floor Plans -
Announcers Booth

SCALE	AS SHOWN
PROJ. NO.	1020367
FILE NO.	
SHEET	14
OF	68

E:\OneDrive\WSA Lakeside Equestrian Center\Construction Drawings\Area 1\Lakeside Equestrian Center_CD-1_Area-1.rvt

-1 0 1 2 3 4 5 6 7 8 9 10

FOR REDUCED PLANS
ORIGINAL SCALE IS IN INCHES

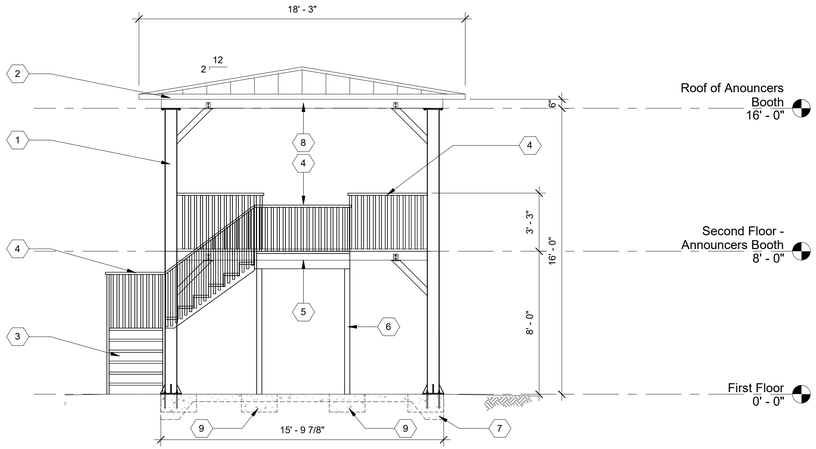

1 Announcer Booth Elevation A
1/4" = 1'-0"

W

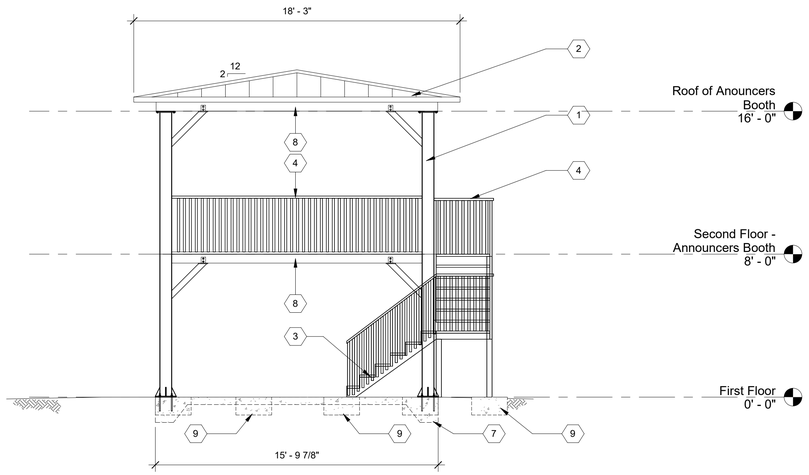

2 Announcer Booth Elevation B
1/4" = 1'-0"

ELEVATIONS KEYNOTES:

1. 8" X 8" METAL POST & BASE PLATE
2. MATAL ROOF OVER STEEL FRAMING MEMBERS
3. PREFAB. STEEL STAIRS BY INSTALLER
4. PREFAB. STEEL RAILINGS BY INSTALLER
5. PREFAB. STAIR LANDING (BY INSTALLER)
6. 4 X 4 STEEL POST
7. 5" CONCRETE SLAB W/12" EDGE
8. STEEL BEAM
9. 24" X 24" CONCRETE FOOTING

ISSUE FOR BID - 2/03/2020 NOT FOR CONSTRUCTION

SHEET: A 1.4.2

LICENSED ARCHITECT
WARREN W. SCOTT
C-011211
11.30.19
RENEWAL DATE
STATE OF CALIFORNIA

763 2nd Street
Suite 200
Encinitas California
92024
760.943.8180
www.wsaaia.com

WARREN SCOTT + ARCHITECTURE

DEPARTMENT OF PARKS AND RECREATION
COUNTY OF SAN DIEGO
5500 OVERLAND DRIVE, SUITE 410 SAN DIEGO, CALIFORNIA 92123

COUNTY OF SAN DIEGO PARKS AND RECREATION

NO.	REVISIONS	APPR.	DATE
Rev	Description		Date

DESIGNED BY: WSA
DRAWN BY: WSA
CHECKED BY: WSA
PROJECT MANAGER: -

LAKESIDE EQUESTRIAN FACILITY

Elevations/ Sections - Announcers Booth

SCALE: AS SHOWN
PROJ. NO.: 1020367
FILE NO.:
SHEET: 15 OF 68

E:\ChoDocWrk\Sh4 - Lakeside Equestrian Center\Construction Drawings\Area 1\Lakeside Equestrian Center_CD-1_Area 1.rvt

-1 0 1 2 3 4 5 6 7 8 9 10

FOR REDUCED PLANS
ORIGINAL SCALE IS IN INCHES

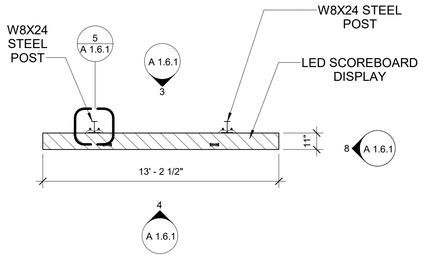

1 **Top View - Electronic Scoreboard**
1/4" = 1'-0"

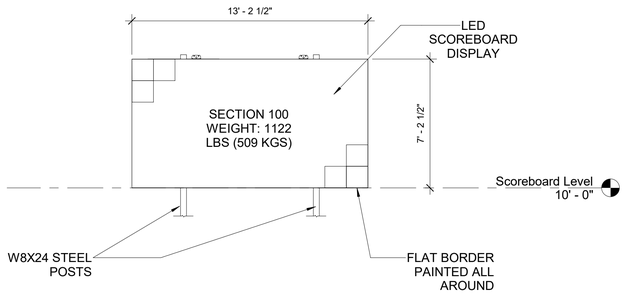

4 **Front View - Electronic Scoreboard**
1/4" = 1'-0"

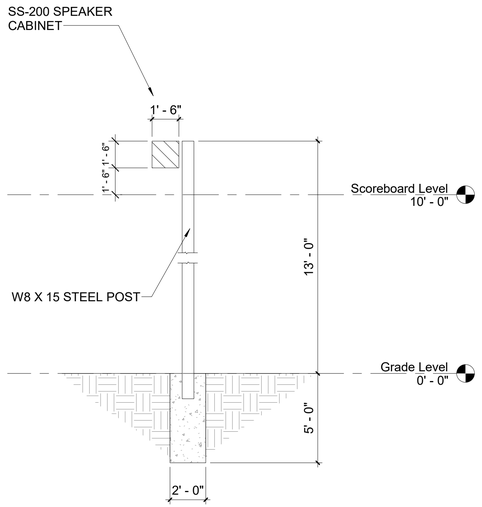

8 **Side View - Speaker Post**
1/4" = 1'-0"

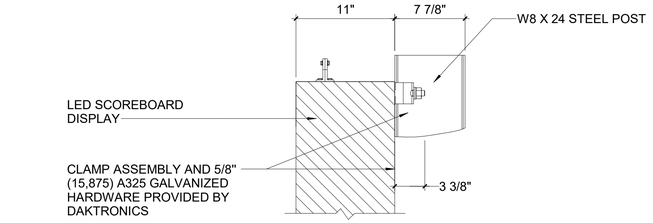

6 **Side View - Electronic Scoreboard - Callout 1**
1 1/2" = 1'-0"

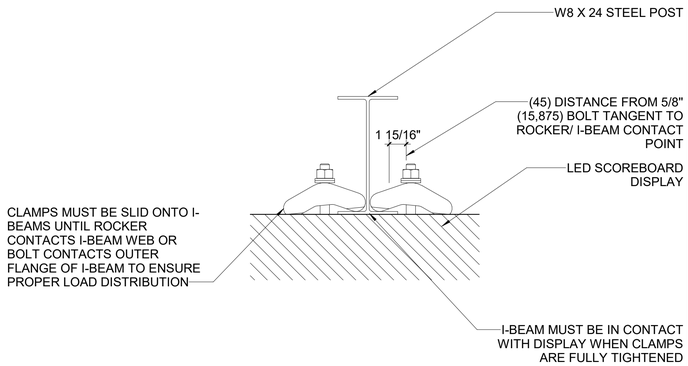

5 **Overall Site Plan - Callout 1 - Callout 6 - Callout 1**
1 1/2" = 1'-0"

* IT IS CRITICAL TO NOT INTERFERE WITH DISPLAY DOOR REMOVAL

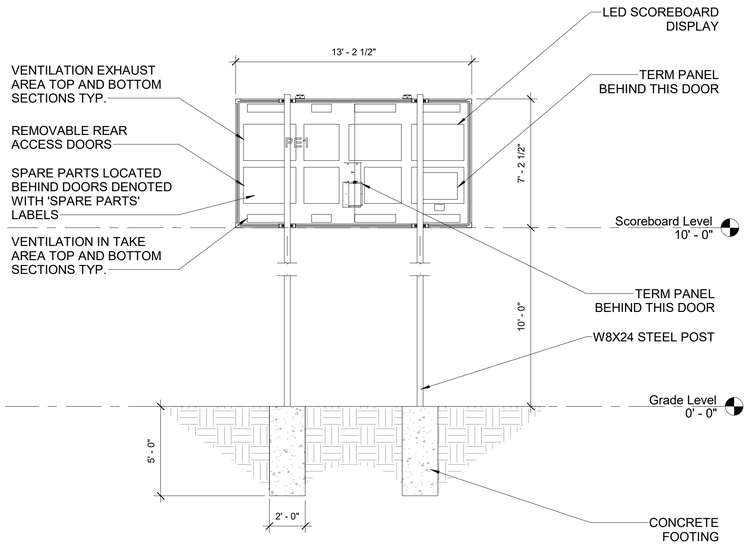

3 **Rear View - Electronic Scoreboard**
1/4" = 1'-0"

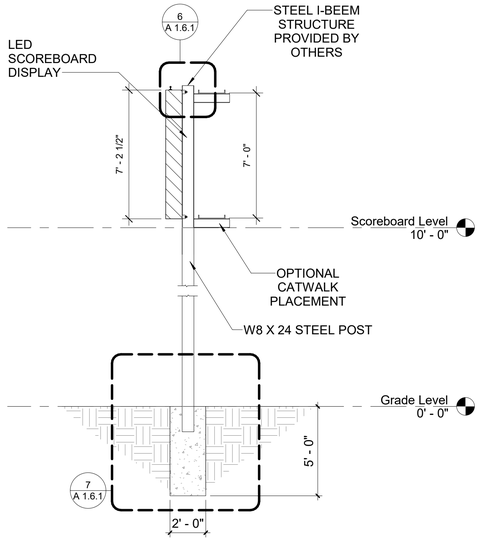

2 **Side View - Electronic Scoreboard**
1/4" = 1'-0"

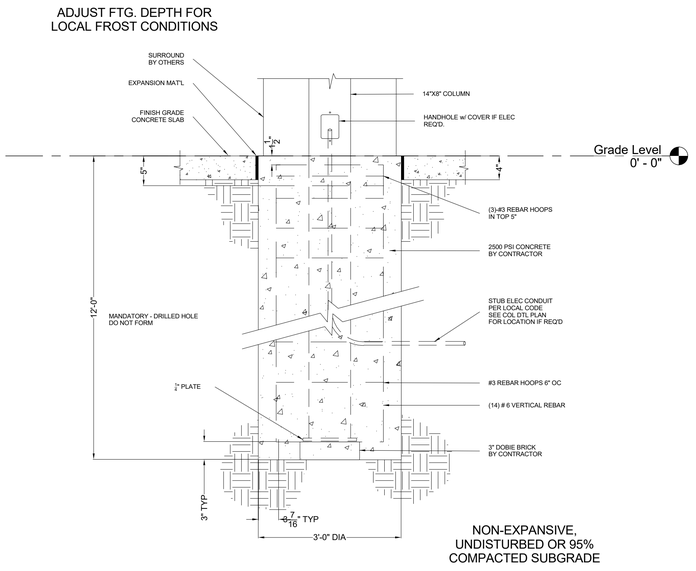

7 **Scoreboard Footing Detail**
1" = 1'-0"

ELECTRONIC SCOREBOARD NOTES:

1. ELECTRONIC SCOREBOARD AND ALL COMPONENTS REQUIRED ARE TO BE PROVIDED FOR (2) COMPLETELY FUNCTIONING, STAND ALONE, INDEPENDENT YET INTERCONNECTED SCOREBOARD, PUBLIC ADDRESS AND AUDIO INSTALLTIONS - (1) AT EACH ARENA
2. THIS SHEET REPRESENTS (1) TYPICAL INSTALLATION
3. LED SCOREBOARD DISPLAY - DAKTRONICS LVX-2130, 10MM MATRIX DISPLAY (OR APPROVED EQUAL); ALL ALUMINUM CONSTRUCTION W/STEEL PLATE SHEETS
4. DAKSTAT 3000 RODEO RESULTS SOFTWARE SYSTEM (OR APPROVED EQUAL)
5. OMNISPORT 2000 CONSOLE (OR APPROVED EQUAL)
6. DAKTRONICS - VENUS CONTROLLER (OR APPROVED EQUAL)
7. DAKTRONICS - NUMERIC SCOREBOARD (OR APPROVED EQUAL),
8. RODEO INTERFACE FOR HORN AUDIO SIGNAL TO PUBLIC ADDRESS SYSTEM
9. JUDGES WIRELESS CONSOLE & BASE STATION (TO BE OPTION)
10. SS-200 AUDIO SYSTEM W/(2) POLE MOUNTED LOUD SPEAKERS PER ARENA, MOUNT SPEAKERS TO POLES OPPOSITE BLEACHER INSTALLATION IN EACH ARENA FOR MAXIMUM COVERAGE.
11. DAKTRONICS PERMANANENT AMPLIFIER RACK (OR APPROVED EQUAL), MOUNTED IN STORAGE AREAS BELOW BLEACHERS
12. CONTRACTOR TO PROVIDE ALL REQUIRED CONDUIT & WIRING TO INTERCONNECT SCOREBOARDS, ANNOUNCERS BOOTHS, SPEAKERS, PUBLIC ADDRESS, TIMING EYE, BUCKING SHOOTS, ETC. - CONTACT DAKTRONICS (OR APPROVED EQUAL) FOR FINAL ENGINEERED LAYOUT FOR PRICING AND CONSTRUCTION,

STRUCTURAL INFORMATION:

1. DESIGN WIND PRESSURE "P" = 72 PSF
2. TOTAL DISPLAY WEIGHT = 1122 LBS
3. TOTAL SPEAKER WEIGHT = 55 LBS
4. CONTRACTOR TO VERIFY DESIGN OF STEEL POST AND FOOT SIZE/DEPTH INDICATED ON THESE PLANS

ELECTRICAL INFORMATION:

1. 6380 WATTS; LINE 1 - 25.2 AMPS; LINE 2 - 27.8 AMPS
2. CONTRACTOR TO PROVIDE 1-POLE, FEEDER CIRCUIT (2H, 1N, 1G) @120/240V OR 120/208V TO SCOREBOARD DISTRIBUTION PANEL

VENTILATION INFORMATION:

1. OPEN AIR REQUIREMENTS FOR NATURAL CONVECTION = 4,833 SF AT EACH INTAKE AND EXHAUST

SCOPE NOTES:

THESE PLAN VIEW AND ELEVATION DRAWINGS ARE A PRELIMINARY ARCHITECTURAL REPRESENTATION OF THE BUILDING. ALL DIMENSIONS, FEATURES AND COMPONENTS SHOWN ON THESE PRELIMINARY DRAWINGS ARE INTENDED TO BE PART OF THE QUOTE.

SHEET: A 1.6.1

ISSUE FOR BID - 2/03/2020 NOT FOR CONSTRUCTION

LICENSED ARCHITECT
WARREN W. SCOTT
C-011211
11.30.19
RENEWAL DATE
STATE OF CALIFORNIA

763 2nd Street
Suite 200
Encinitas California
92024
760.943.8180
www.wsaala.com
WARREN SCOTT + ARCHITECTURE

DEPARTMENT OF PARKS AND RECREATION
COUNTY OF SAN DIEGO
5500 OVERLAND DRIVE, SUITE 410 SAN DIEGO, CALIFORNIA 92123

COUNTY OF SAN DIEGO PARKS AND RECREATION

NO.	REVISIONS	APPR.	DATE
Rev	Description		Date

DESIGNED BY:	WSA
DRAWN BY:	WSA
CHECKED BY:	WSA
PROJECT MANAGER:	-

LAKESIDE EQUESTRIAN FACILITY
Details - Electronic Scoreboard

SCALE	SHEET
AS SHOWN	16
PROJ. NO.	OF
1020367	
FILE NO.	68

D:\OneDrive\WSA - Lakeside Equestrian Center\Construction Drawings\Arles 1\Lakeside Equestrian Center_CD-1_Arles 1.rvt

FOR REDUCED PLANS
ORIGINAL SCALE IS IN INCHES

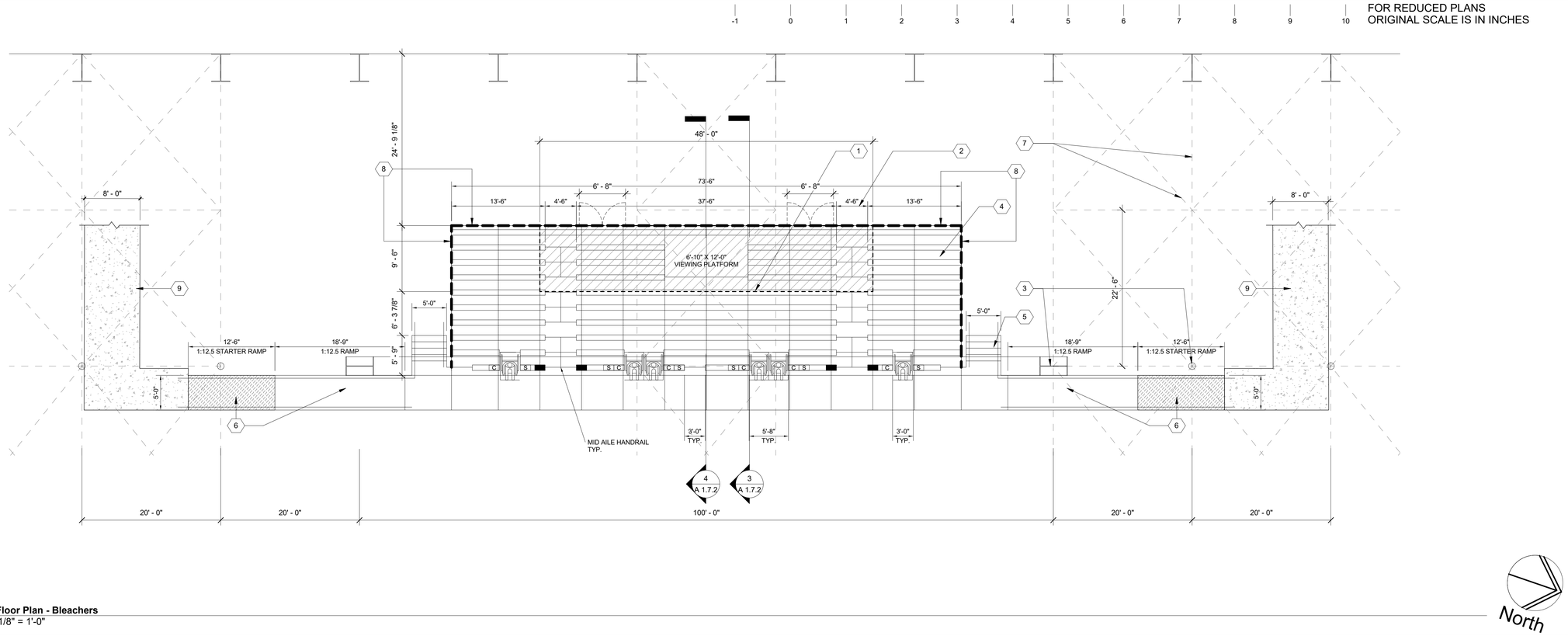

1 Floor Plan - Bleachers
1/8" = 1'-0"

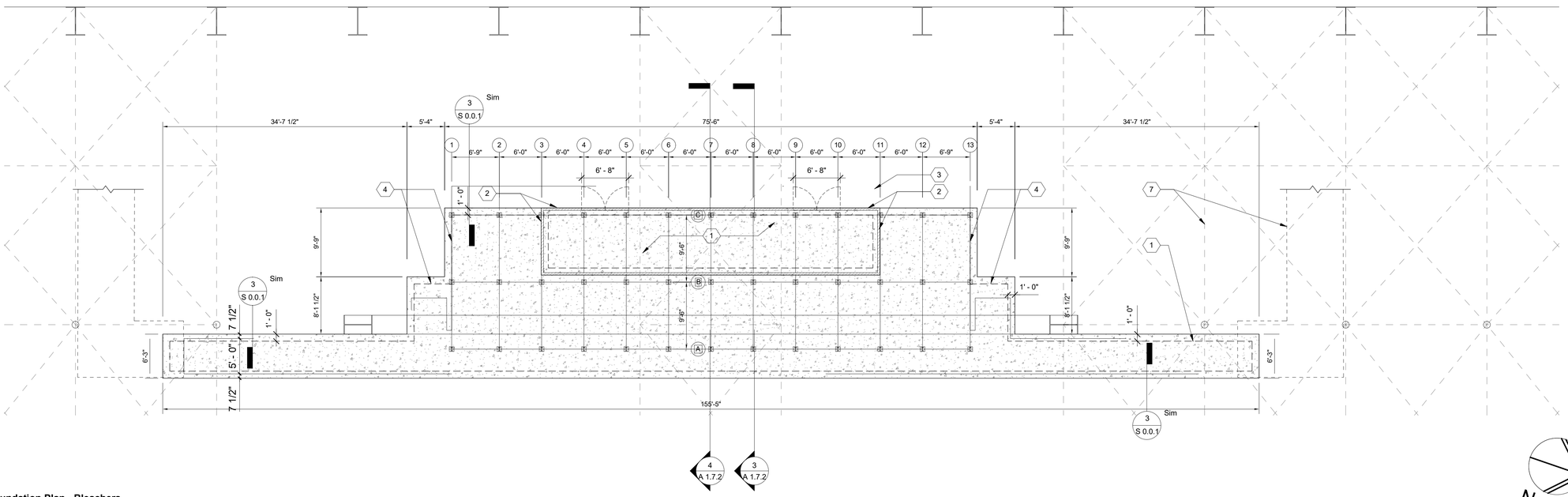

2 Foundation Plan - Bleachers
1/8" = 1'-0"

FLOOR PLAN KEYNOTES:

1. LINE OF STORAGE AREA BELOW
2. DOORS OF STORAGE ROOM BELOW
3. STEEL COLUMNS
4. BLEACHERS
5. STAIRS
6. STARTER RAMP & RAMP
7. ROOF STRUCTURE ABOVE
8. VINYL COATED CHAIN LINK FENCING ENCLOSING SIDES & BACK OF BLEACHERS - NEED MAINTENANCE ACCESS UNDER BLEACHERS
9. CONCRETE WALK, PER CIVIL

FOUNDATION PLAN KEYNOTES:

1. 5" CONCRETE SLAB RAISED 12" ABOVE SURROUNDING CONCRETE
2. METAL STUD WALLS
3. 3'-0" X 6'-8" HOLLOW METAL DOOR
4. 6" CONCRETE SLAB BELOW BLEACHERS
5. 12" SLAB EDGE PER STRUCTURAL

ISSUE FOR BID - 2/03/2020 NOT FOR CONSTRUCTION

SHEET: A 1.7.1

LICENSED ARCHITECT
WARREN W. SCOTT
C-011211
11.30.19
RENEWAL DATE
STATE OF CALIFORNIA

763 2nd Street
Suite 200
Encinitas California
92024
760.943.8180
www.wsaaia.com
WARREN SCOTT + ARCHITECTURE

DEPARTMENT OF PARKS AND RECREATION
COUNTY OF SAN DIEGO
5500 OVERLAND DRIVE, SUITE 410 SAN DIEGO, CALIFORNIA 92123

COUNTY OF SAN DIEGO PARKS AND RECREATION

NO.	REVISIONS	APPR.	DATE
Rev	Description		Date

DESIGNED BY: WSA
DRAWN BY: WSA
CHECKED BY: WSA
PROJECT MANAGER: -

LAKESIDE EQUESTRIAN FACILITY
Floor Plan - Bleachers

SCALE: AS SHOWN
PROJ. NO. 1020367
FILE NO.
SHEET 17 OF 68

E:\OneDrive\WSA - Lakeside Equestrian Center\Construction Drawings\Area 1\Lakeside Equestrian Center_CD-1_Area-1.rvt

FOR REDUCED PLANS
ORIGINAL SCALE IS IN INCHES

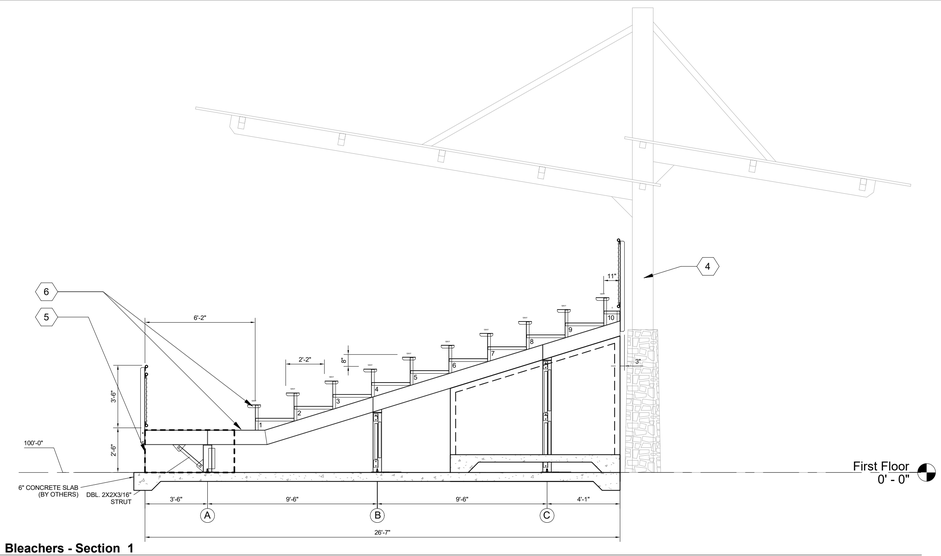

3 **Bleachers - Section 1**
1/4" = 1'-0"

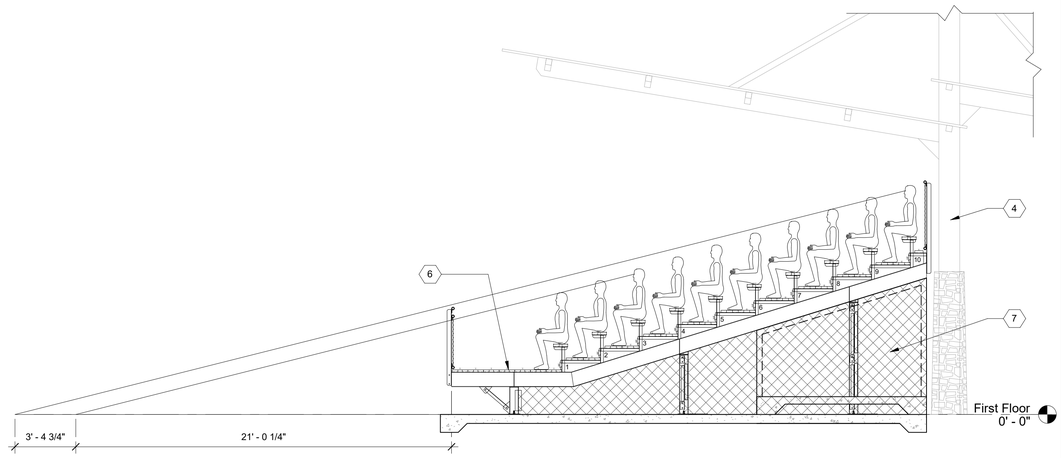

1 **Elevation - Bleachers**
1/4" = 1'-0"

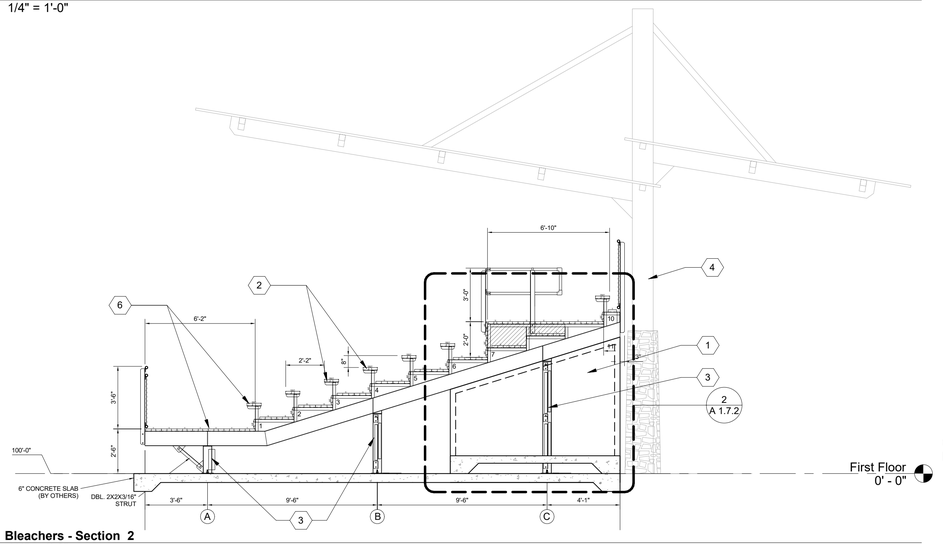

4 **Bleachers - Section 2**
1/4" = 1'-0"

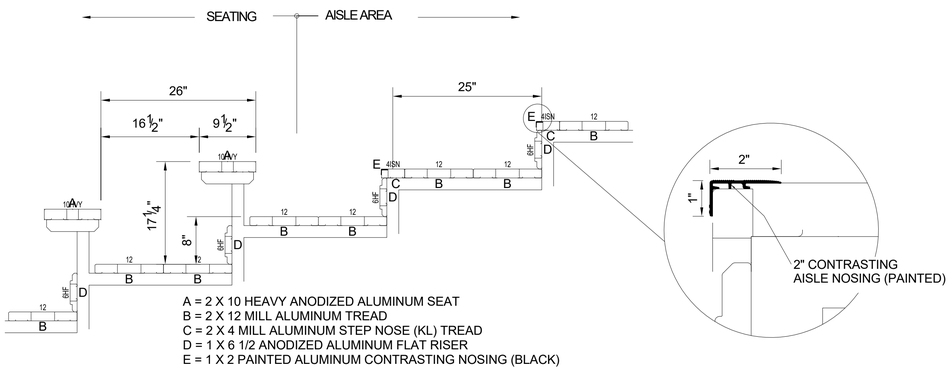

A = 2 X 10 HEAVY ANODIZED ALUMINUM SEAT
B = 2 X 12 MILL ALUMINUM TREAD
C = 2 X 4 MILL ALUMINUM STEP NOSE (KL) TREAD
D = 1 X 6 1/2 ANODIZED ALUMINUM FLAT RISER
E = 1 X 2 PAINTED ALUMINUM CONTRASTING NOSING (BLACK)

5 **Bleachers - Plank Arrangement**
1/2" = 1'-0"

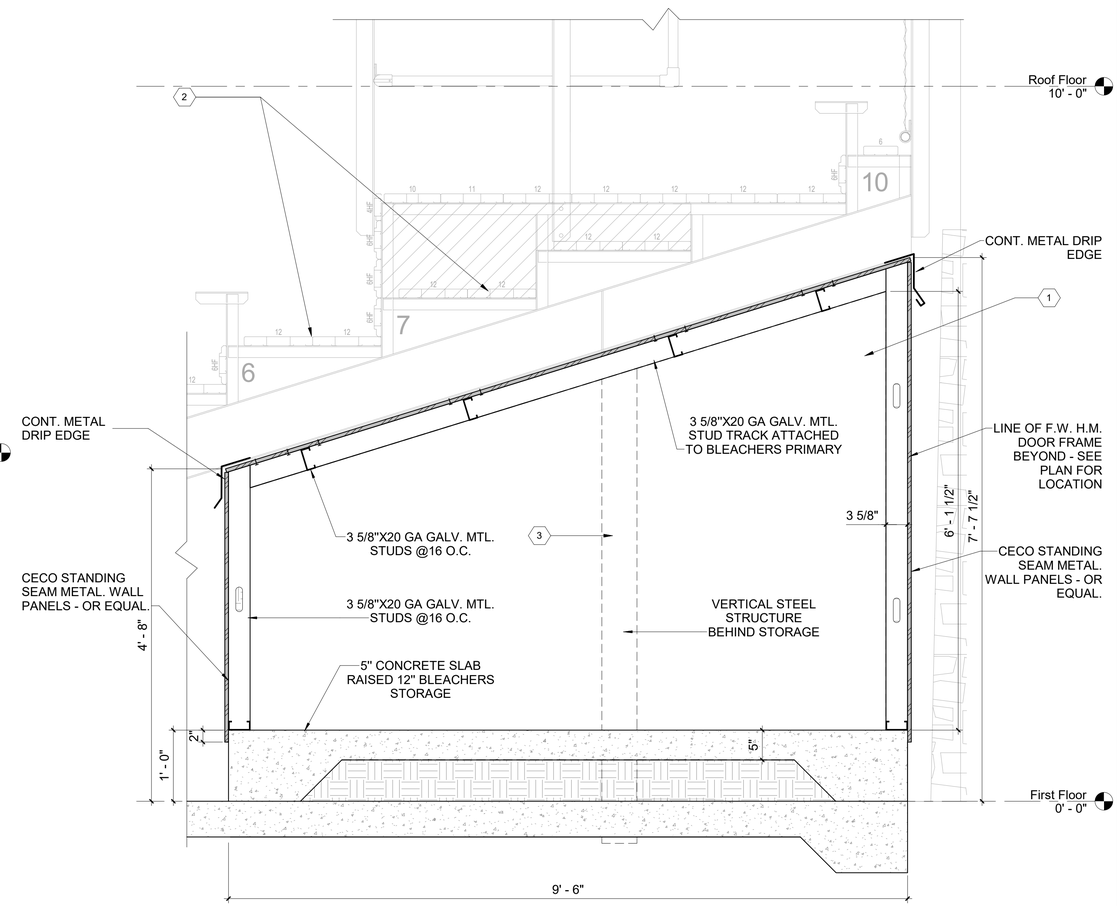

2 **Storage Area Section**
1" = 1'-0"

ELEVATIONS KEYNOTES:

1. BLEACHERS STORAGE BELOW
2. BLEACHERS SEATS
3. BLEACHERS STRUCTURE
4. SHADE STRUCTURE IS SHOWN FOR REFERENCE AT AREA 2 BLEACHERS
5. LINE OF ADA ACCESSIBLE RAMP
6. ADA ACCESSIBLE SPACE
7. VINYL COATED CHAIN LINK FENCING ENCLOSING SIDES & BACK OF BLEACHERS - NEED MAINTENANCE ACCESS UNDER BLEACHERS

ISSUE FOR BID - 2/03/2020 NOT FOR CONSTRUCTION

SHEET: A 1.7.2

LICENSED ARCHITECT
WARREN W. SCOTT
C-011211
11.30.19
RENEWAL DATE
STATE OF CALIFORNIA

763 2nd Street
Suite 200
Encinitas California
92024
760.943.8180
www.wsaaia.com
WARREN SCOTT + ARCHITECTURE

DEPARTMENT OF PARKS AND RECREATION
COUNTY OF SAN DIEGO
5500 OVERLAND DRIVE, SUITE 410 SAN DIEGO, CALIFORNIA 92123

COUNTY OF SAN DIEGO PARKS AND RECREATION

NO.	REVISIONS	APPR.	DATE
Rev	Description		Date

DESIGNED BY: WSA
DRAWN BY: WSA
CHECKED BY: WSA
PROJECT MANAGER: -

LAKESIDE EQUESTRIAN FACILITY
Elevations/ Sections - Bleachers

SCALE: AS SHOWN
PROJ. NO. 1020367
FILE NO.
SHEET 18 OF 68

E:\OneDrive\WSA - Lakeside Equestrian Center\Construction Drawings\Area 1\Lakeside Equestrian Center_CD-1_Area-1.rvt

-1 0 1 2 3 4 5 6 7 8 9 10

FOR REDUCED PLANS
ORIGINAL SCALE IS IN INCHES

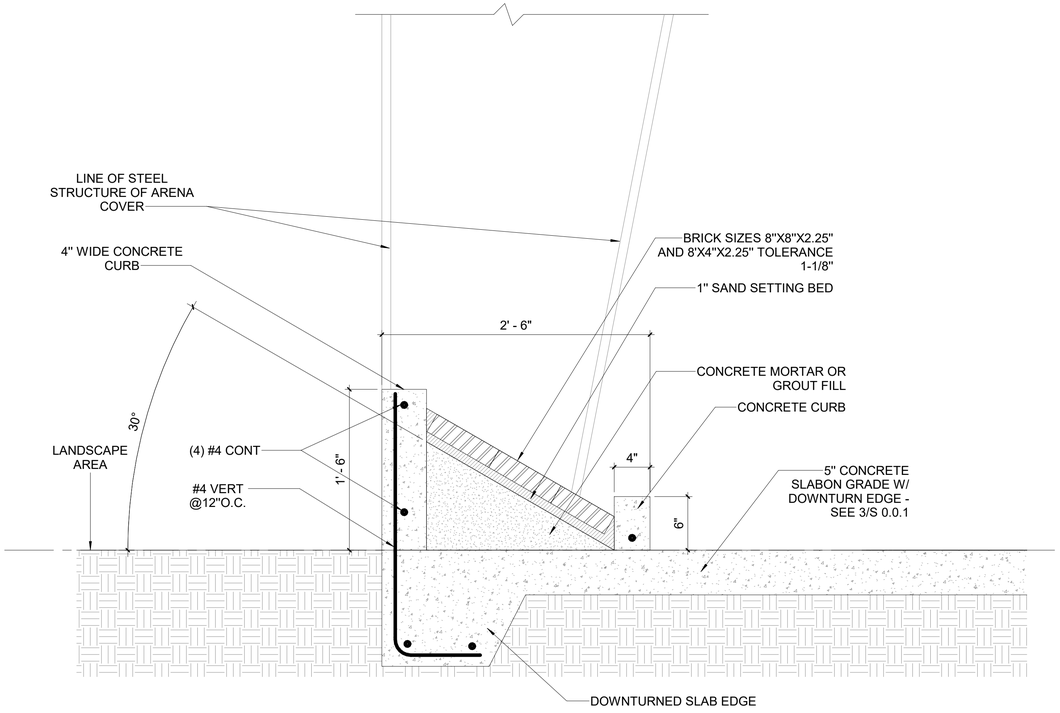

2 **Raised Donor Platform Section**
1 1/2" = 1'-0"

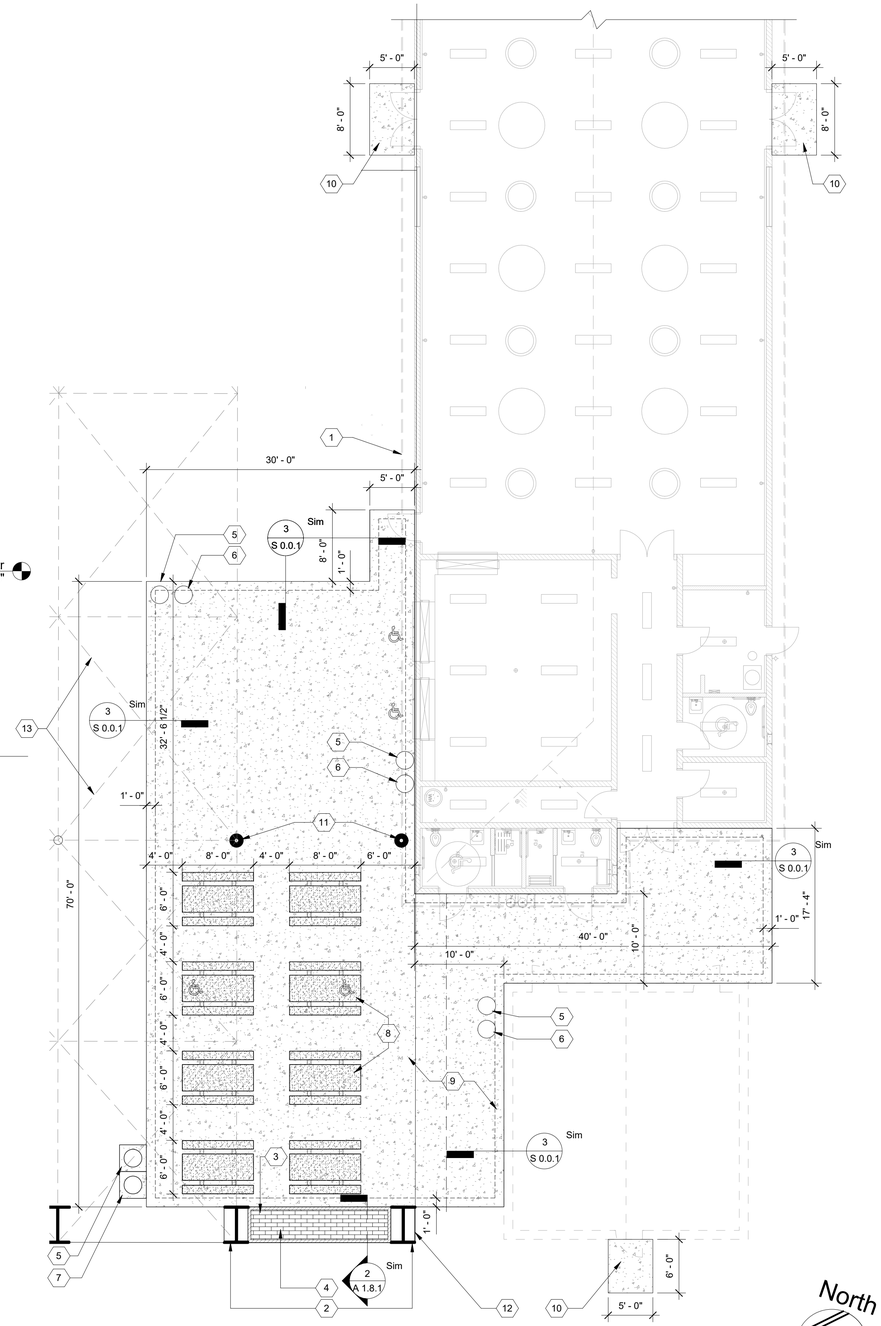

1 **Patio Area - Floor Plan**
1/8" = 1'-0"

FLOOR PLAN KEYNOTES:

1. LINE OF BUILDING & STRUCTURE ABOVE
2. STEEL STRUCTURE OF ARENA COVER
3. ELEVATED DONOR BRICK PLATFORM W/ACCENT LIGHTING, DETAIL 2/A 1.8.1
4. DONOR BRICK PAVERS
5. TRASH BIN RECEPTACLE
6. RECYCLE BIN - SEE A 5.2.1
7. LANSCAPE AREA - SEE CIVIL
8. PICNIC TABLE - SEE A 5.2.1
9. PATIO AREA CONCRETE PAD
10. 5" CONCRETE SLAB ON GRADE
11. 1' - 0" DIA STEEL COLUMNS (ARENA COVER)
12. STEEL STRUCTURE OF ARENA COVERING
13. ARENA STRUCTURE ABOVE

ISSUE FOR BID - 2/03/2020 NOT FOR CONSTRUCTION

SHEET: A 1.8.1

LICENSED ARCHITECT
WARREN W. SCOTT
C-011211
11.30.19 RENEWAL DATE
STATE OF CALIFORNIA

763 2nd Street
Suite 200
Encinitas California
92024
760.943.8180
www.wsaaia.com

WARREN SCOTT + ARCHITECTURE

DEPARTMENT OF PARKS AND RECREATION
COUNTY OF SAN DIEGO
5500 OVERLAND DRIVE, SUITE 410 SAN DIEGO, CALIFORNIA 92123

COUNTY OF SAN DIEGO PARKS AND RECREATION

NO.	REVISIONS	APPR.	DATE
Rev	Description		Date

DESIGNED BY: WSA
DRAWN BY: WSA
CHECKED BY: WSA
PROJECT MANAGER: -

LAKESIDE EQUESTRIAN FACILITY
Floor Plan - Patio Area

SCALE: AS SHOWN
PROJ. NO.: 1020367
FILE NO.:
SHEET: 19 OF 68

E:\ArchDrive\RSA - Lakeside Equestrian Center\Construction Drawings\Arch 1\Lakeside Equestrian Center_CD-1_Arch-1.rvt

FOR REDUCED PLANS
ORIGINAL SCALE IS IN INCHES

-1 0 1 2 3 4 5 6 7 8 9 10

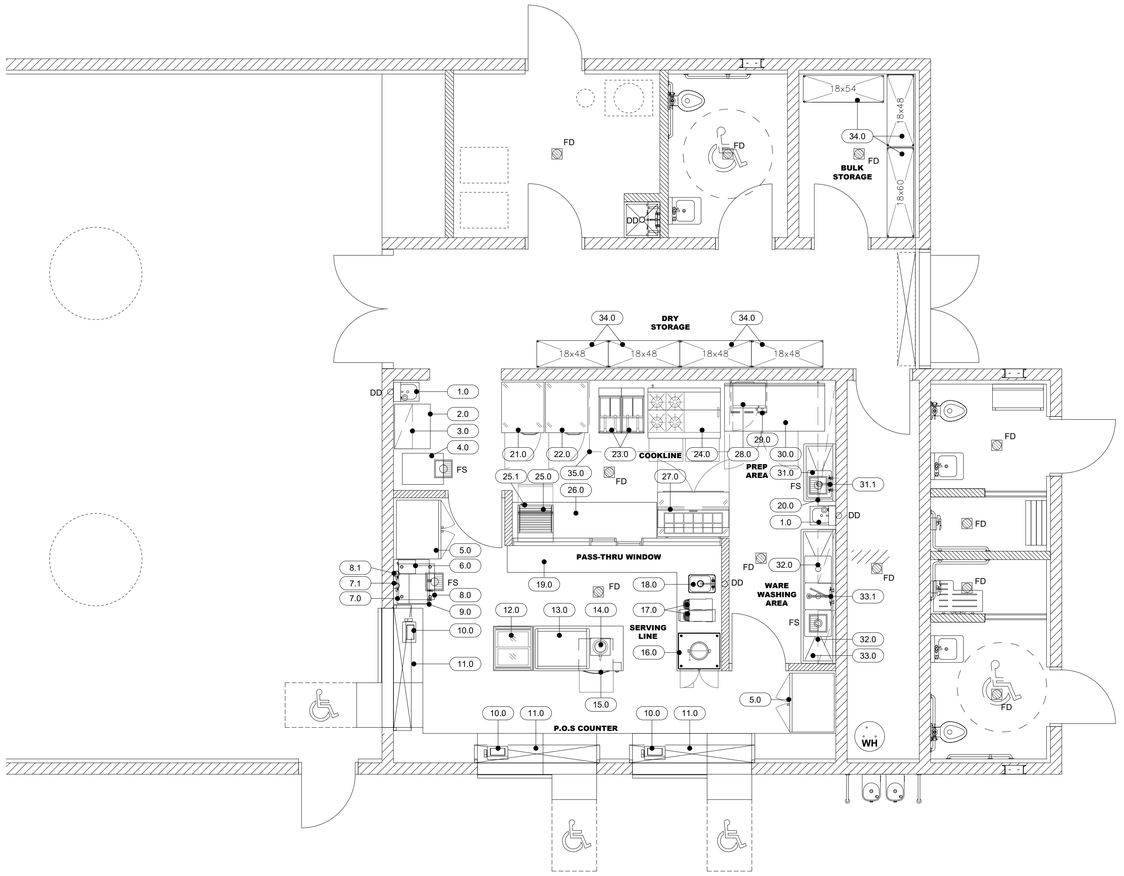

ISSUE FOR BID - 2/03/2020 NOT FOR CONSTRUCTION

FOOD SERVICE EQUIPMENT SCHEDULE

NO.	QTY	DESCRIPTION	MANUFACTURER	MODEL #	ELECTRICAL V	PH	AMP	KW	HP	CONNECT WIRED	CONNECT CORD/ PLUG	PLUMBING SUPPLY P.O.C. HOT	SUPPLY P.O.C. COLD	WASTE SIZE	WASTE DIRECT	WASTE INDIRECT FS	WASTE INDIRECT TD	GAS SIZE	GAS MBH	REMARKS
1.0	2	S/S WALL MOUNTED HAND SINK W/ SIDE SPLASH GUARDS W/ BUILT-IN SOAP & TOWEL DISPENSER	KROWNE	HS-32								1/2"	1/2"	1-1/2"	X					
2.0	1	S/S WORK TABLE W/ UNDERSHELF (30"W X 24"D)	CUSTOM STAINLESS STEEL	NSF APPROVED																
3.0	1	S/S WALL SHELF (30"W X 12"D)	CUSTOM STAINLESS STEEL	NSF APPROVED																
4.0	1	SOFT SERVER ICE CREAM MACHINE FLOOR STANDING W/ CASTERS (SELF-CONTAINED), (2)FLAVORS & (1) TWIST	SPACEMAN	SM-6250H	208-230	1	12.0	3.40			L6-20P									
5.0	2	36"W REACH-IN COOLER W/ GLASS DOORS ON CASTERS (SELF-CONTAINED)	TRUE MANUFACTURING	GDM-35-HC-TSL01	120	1	6.5	0.78	1/2		5-15P									
6.0	1	COFFEE GRINDER	FETCO	GR-2.2	120	1	5.7	0.68	1/2		5-15P									
7.0	1	COFFEE BREWER	FETCO	CBS-2142XTS	200-240	1	21.3-25.5	4.2-6.1			X									FILTERED C.W. FROM ITEM 7.1
7.1	1	WATER FILTER FOR ITEM 7.1	OPTIPURE	QTI10-1									3/8"							EXTEND FILTERED C.W. TO ITEM 7.0
8.0	1	ICE MACHINE W/ BIN (SELF-CONTAINED)	ICE-O-MATIC	ICEU226FA	208-230	1	6.0	1.25-1.38		X			3/8"	3/4"			X			FILTERED C.W. FROM ITEM 8.1
8.1	1	WATER FILTER FOR ITEM 8.0	OPTIPURE	QTI10-1									3/8"							EXTEND FILTERED C.W. TO ITEM 8.0
9.0	1	S/S WALL SHELF W/ TOP MOUNTED BRACKETS	CUSTOM STAINLESS STEEL	NSF APPROVED																MOUNTED AT 40" A.F.F.
10.0	3	P.O.S. SYSTEM (BY OWNER)	BY OWNER	VERIFY UTILITY REQUIREMENTS W/ OWNER																
11.0	LOT	FRONT COUNTER (DESIGNED BY ARCHITECT / INTERIOR DESIGNER)	CUSTOM MILLWORK (BY ARCHITECT)																	
12.0	1	HORIZONTAL FREEZER ON CASTERS (SELF-CONTAINED)	MASTERBILT	MSC-31AN	120	1	1.0	0.12	1/3		5-15P									
13.0	1	HORIZONTAL MERCHANDISING DISPLAY WARMER	HATCO	GR2SDH-30D	120/208	1	8.5	2.04			L14-20P									
14.0	1	NACHO CHEESE WARMER W/ PUMP	STAR MANUFACTURING	11WLA-HS	120	1	14.0	1.68			5-15P									
15.0	1	BUILT-IN DRAWER WARMER (2) DRAWERS	WELLS	RW-2BHD	120	1	7.5	0.90		X										
16.0	1	POP CORN MACHINE	STAR MANUFACTURING	G18-Y	240	1	11.7	2.81			6-15P									
17.0	1	FROZEN BEVERAGE DISPENSER (2) FLAVORS, COUNTERTOP	VOLLRATH	VCBA128-37	120	1	6.0	0.72			5-15P									
18.0	1	DROP-IN HAND SINK (10"WX14"D"X10"H) W/ FAUCET AND SIDE SPLASHGUARDS, SOAP & TOWEL DISPENSER BY OWNER	JOHN BOOS & CO.	PB-DISINK101410-P-SSLR								1/2"	1/2"	1-1/2"	X					
19.0	1	"L" SHAPE COUNTER (DESIGNED BY ARCHITECT / INTERIOR DESIGNER)	CUSTOM MILLWORK (BY ARCHITECT)	CUSTOM																
20.0	1	S/S WALL SHELF (84"W X 12"D)	JOHN BOOS & CO.	BHS-1284																
21.0	1	REACH-IN REFRIGERATOR ON CASTERS (SELF-CONTAINED)	CONTINENTAL REFRIGERATOR	1-REN	120	1	5.2	0.62	1/4		5-15P									
22.0	1	REACH-IN FREEZER ON CASTERS (SELF-CONTAINED)	CONTINENTAL REFRIGERATOR	1-FEN	120	1	7.6	0.91	1/2		5-15P									
23.0	2	FRYER (GAS)	PITCO	VF-35S														3/4"	70	
23.1	2	GAS QUICK DISCONNECT (NOT SHOWN ON PLANS)	DORMONT	1675KIT48																
24.0	1	(2) NON-CLOG BURNERS, STD GRATES, (1) 24" GRIDDLE, (2) SPACE SAVER OVENS W/ BATTERY SPARK IGNITION	SOUTHBEND	4481EE-2GR														3/4"	270	
24.1	1	GAS QUICK DISCONNECT (NOT SHOWN ON PLANS)	DORMONT	1675KIT48																
25.0	1	HOT DOG GRILL	APW WYOTT	HR-31	120	1	8.1	0.97			5-15P									
25.1	1	HOT DOG BUN CABINET	APW WYOTT	BC-31D																
26.0	1	PASS-THRU COUNTER ((DESIGNED BY ARCHITECT / INTERIOR DESIGNER)	CUSTOM MILLWORK (BY ARCHITECT)	CUSTOM																
27.0	1	REFRIGERATED SANDWICH/SALAD PREP TABLE ON CASTERS (SELF-CONTAINED)	CONTINENTAL REFRIGERATOR	SW48N12	120	1	4.5	0.54			5-15P									
28.0	1	COMMERCIAL MICROWAVE	AMANA	RCS10DSE	120	1	13.0	1.56			5-15P									
29.0	1	S/S MICROWAVE SHELF (24"W X 20"D)	JOHN BOOS & CO.	BMS2024																
30.0	1	WORKTOP REFRIGERATOR ON CASTERS (SELF-CONTAINED)	TRUE MANUFACTURING	TWT-67-HC	120	1	1.7	0.20			5-15P									
31.0	1	PREP SINK (W/ MIN 18"X18"X12" COMPARTMENT AND MIN 18" INTEGRAL DRAINBOARDS)	JOHN BOOS & CO.	E1S8-18-12L18										1-1/2"		X				
31.1	1	FAUCET FOR ITEM 31.0	T&S BRASS	5F-8WLX06								1/2"	1/2"							
32.0	1	S/S WALL SHELF (36"W X 12"D)	JOHN BOOS & CO.	BHS1236																
33.0	1	3 COMPARTMENT SINK (MIN 18"X18"X12" COMPARTMENTS AND 18" DRAINBOARDS)	JOHN BOOS & CO.	ES3S-18-12T18										1-1/2"		X				
33.1	1	PRE-RINSE FAUCET W/ ADD ON FAUCET FOR ITEM 34.0	T&S BRASS	B-0133-A12-B08								1/2"	1/2"							
34.0	7	DRY STORAGE SHELVING UNIT (CHROME COATED; 86" POSTS; 5 TIERS PER UNIT)	WINCO	SEE PLAN FOR SIZES																
35.0	1	TYPE I EXHAUST HOOD W/ LIGHTS	ACCUREX	REFER TO HOOD DRAWINGS	120	1	15.0	1.80		X										

PLUMBING LEGEND

○	DIRECT WASTE (DD)
▨	FLOOR DRAIN (FD)
FD	FLOOR SINK (FS)
FS	12"X12" FLOOR SINK
P.C.	PLUMBING CONTRACTOR

SHEET: FS1.1.1

FOOD SERVICE DESIGN GROUP
FSDG
1202 MARKET STREET TEL: (619) 239-8156
SAN DIEGO, CA 92101 FAX: (619) 239-2686
www.fsdesigngroup.com
INNOVATIVE FOOD SERVICE DESIGN

DEPARTMENT OF PARKS AND RECREATION
COUNTY OF SAN DIEGO
5500 OVERLAND DRIVE, SUITE 410 SAN DIEGO, CALIFORNIA 92123

COUNTY OF SAN DIEGO PARKS AND RECREATION

NO.	REVISIONS	APPR.	DATE
Rev	Description		Date

DESIGNED BY: WSA
DRAWN BY: WSA
CHECKED BY: WSA
PROJECT MANAGER:

LAKESIDE EQUESTRIAN FACILITY

Food service equipment plan and schedule

SCALE AS SHOWN
PROJ. NO. 1020367
FILE NO.
SHEET 20 OF 68

D:\OneDrive\WSA - Lakeside Equestrian Center\Construction Drawings\Activated Index\Lakeside Equestrian Center_CD-1_Activated Index.dwg, 2/6/2020 8:41:47 AM, Adobe PDF

-1 0 1 2 3 4 5 6 7 8 9 10

FOR REDUCED PLANS
ORIGINAL SCALE IS IN INCHES

HOOD INFORMATION

HOOD NO.	MARK	MODEL	HOOD DIMENSIONS (IN.)			HOOD CONSTR.	COOKING LOAD / DUTY RATING	EXHAUST						SUPPLY		TOTAL WEIGHT LBS.	SECTION LOCATION
			LENGTH	WIDTH	HEIGHT			TOTAL CFM	COLLAR(S)					MUA CFM	AC CFM		
									WIDTH	LENGTH	DIA.	CFM	S.P.				
1	HOOD-1	XXEW-94-S	94	48	24	430 SS WHERE EXPOSED	HEAVY	1600	12	12		1600	0.534	1280		274.167	SINGLE

HOOD INFORMATION

HOOD NO.	MARK	LIGHTING DETAILS			GREASE FILTRATION DETAILS				UTILITY CABINET(S)				
		FIXTURE TYPE BULB / LAMP INFO	QTY	FOOT CANDLES	TYPE / MODEL MATERIAL	QTY	SIZE (IN.)		LOCATION	FIRE SYSTEM		CONTROLS	
							L	H		TYPE	SIZE	MODEL	INTERFACE
1	HOOD-1	INCANDESCENT (GLOBE) 100W A19 (BULBS NOT INCL.)	3	42.08	X-TRACTOR STAINLESS STEEL	2	16	20					
						3	20						

SUPPLY PLENUM INFORMATION

HOOD NO.	MARK	POS.	TYPE	SIZE (IN.)			INSULATED	DAMPER(S)	LED LIGHT(S)		TOTAL CFM	COLLARS								
				L	W	H			SUPPLIED	QTY		TYPE	MOUNTING	QTY	W	L	DIA.	CFM	S.P.	VEL.
1	HOOD-1	FRONT	ASP	94	14	10	NO	YES	NO		1280	MUA	FACTORY	2	10	18		640	0.12	512

HOOD OPTIONS

- UL 710 LISTED W/ OUT EXHAUST FIRE DAMPER - UL #R25625
- BACK INTEGRAL AIR SPACE - 3 IN WIDE
- FACTORY MOUNTED EXHAUST COLLAR(S)
- PERFORMANCE ENHANCING LIP (PEL) TECHNOLOGY
- STANDING SEAM CONSTRUCTION FOR SUPERIOR STRENGTH

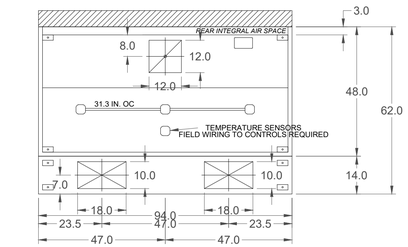

MARK: HOOD-1 - SECTION 1
PLAN VIEW

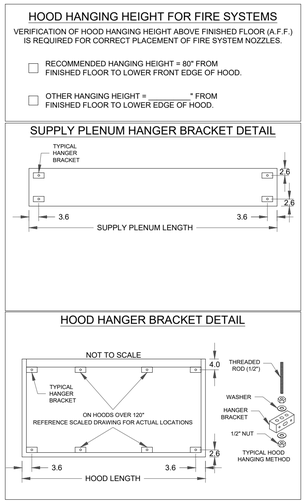

MARK: HOOD-1 - SECTION 1
ELEVATION VIEW

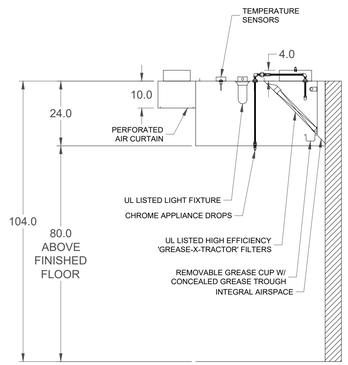

MARK: HOOD-1
SECTION VIEW

RELEASE WITH TEMP
TANK
ANSUL R102
FIRE SYSTEM MARK: FIRE SUPPRESSION
PIPE & CONDUIT
BY ANSUL DISTRIBUTOR

FOR EXHAUST HOOD: ITEM 35.0
TYPE I HIGH TEMP HOOD
TOTAL EXHAUST IS 16000 CFM

REMOTE PLENUM FROM MAU	HVAC COOL/ HEATING DUCTS FROM HVAC UNIT	TOTAL CFM
80%= 1,280 CFM	20%= 320 CFM	1,600

EXHAUST HOOD NOTES

1. MECHANICAL EXHAUST SYSTEM SHALL BE PROVIDED OVER ALL COOKING EQUIPMENT.
2. MECHANICAL INDUCED MAKE-UP AIR MUST BE PROVIDED FOR COOKING AND DISHWASHING EXHAUST HOODS AT A SUFFICIENT CAPACITY OF 100% OF AIR BEING EXHAUSTED.
3. MAKE-UP AIR SHALL BE DELIVERED IN THE PROXIMITY OF THE EXHAUST SYSTEM IN A MANNER NOT TO CREATE UNDUE AIR TURBULENCE IN THE WORKING AREAS.
4. LOCATION OF THE EXHAUST AND MAKE-UP AIR DUCT(S) ARE TO BE VERIFIED AT THE JOB SITE.
5. U.L. LISTED EXHAUST HOOD(S) TO BE CONSTRUCTED AND INSTALLED TO ALL U.L. SPECIFICATIONS.
6. ELECTRICAL CONTRACTOR SHALL INSTALL HOOD LIGHTING. INTER-CONNECT LIGHTS PROVIDE AND MAKE FINAL CONNECTIONS AS NECESSARY PER CODE.
7. ELECTRICAL CONTRACTOR SHALL PROVIDE INTERLOCK SWITCH FOR THE MAKE-UP AIR SYSTEM AND EXHAUST BLOWER (TYP.).
8. TURBINE UPDRAFT EXHAUST FANS SHALL BE HINGED AND CHAINED FOR CLEANING OF VERTICAL DUCT BY MECHANICAL CONTRACTOR.
9. FIRE PROTECTION SYSTEM TO BE PROVIDED PER CODE.

ISSUE FOR BID - 2/03/2020 NOT FOR CONSTRUCTION

PROJECT 1/16/2020 LAKESIDE EQUESTRIAN CENTER
MARK
HOOD-1

ACCUREX SOUTHERN CA & HAWAII
DAVID SPERLING
DAVID.SPERLING@ACCUREX.COM
(509)430-5326

ACCUREX

SHEET: FS-H1

FOOD SERVICE DESIGN GROUP
FSDG
1202 MARKET STREET TEL: (619) 239-8156
SAN DIEGO, CA 92101 FAX: (619) 239-2686
www.fsdesigngroup.com
INNOVATIVE FOOD SERVICE DESIGN

DEPARTMENT OF PARKS AND RECREATION
COUNTY OF SAN DIEGO
5500 OVERLAND DRIVE, SUITE 410 SAN DIEGO, CALIFORNIA 92123

COUNTY OF SAN DIEGO PARKS AND RECREATION

NO.	REVISIONS	APPR.	DATE
Rev	Description		Date

DESIGNED BY: WSA
DRAWN BY: WSA
CHECKED BY: WSA
PROJECT MANAGER:

LAKESIDE EQUESTRIAN FACILITY
Hood drawings & specifications

SCALE AS SHOWN
PROJ. NO. 1020367
FILE NO.
SHEET 21 OF 68

D:\OneDrive\FSA - Lakeside Equestrian Center\Construction Drawings\Abbreviated Index\Lakeside Equestrian Center_CD-1_Abbreviated Index.dwg.rvt

-1 0 1 2 3 4 5 6 7 8 9 10

FOR REDUCED PLANS
ORIGINAL SCALE IS IN INCHES

FIRE SYSTEM INFORMATION

MARK	MODEL	LOCATION	FLOW POINTS		SUPPLY LINE	DETECTION	MARK(S) PROTECTED BY FIRE SYSTEM
			HOODS	PCU			
FIRE SUPPRESSION	ANSUL R-102 WET CHEMICAL	REMOTE MOUNTED	14 UTILIZED 22 AVAILABLE		CONTINUOUS	FUSIBLE LINK	HOOD-1 SECTION 1

FIRE SYSTEM OPTIONS AND ACCESSORIES

FULL INSTALLATION (INCLUDES PRE-PIPED HOOD(S) WITH DETECTION AND FACTORY COORDINATED INSTALL)
CHROME SLEEVES FOR FACTORY PROVIDED APPLIANCES DROPS - INCLUDED
METAL BLOW-OFF CAPS - INCLUDED
GAS VALVE - INCLUDED - MECHANICAL SHUTOFF VALVE, 2", (ANSUL) - PART# ANSULMECHSHUTOFFVALVE200
HOOD SUPPRESSION AGENT - INCLUDED - 6 GAL. - [(2) 3.0 TANK(S)]
REMOTE PULL STATION - STANDARD - INSTALLATION AT SINGLE POINT OF EGRESS

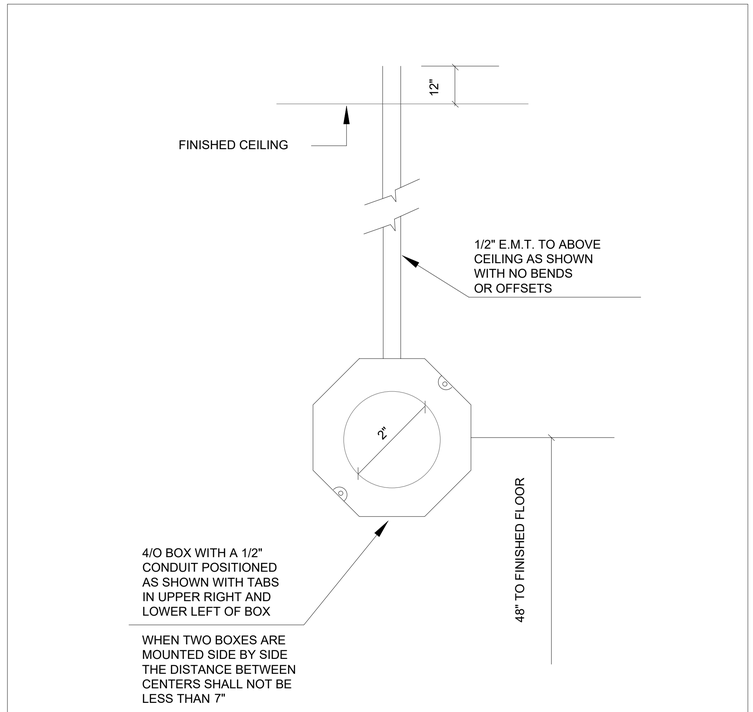

REMOTE FIRE PULL DETAIL:NOT TO SCALE

ANSUL R102 (WET CHEMICAL) FIRE PROTECTION SYSTEM - MODEL FSSC

CONTROL PANEL

1. STAINLESS STEEL ENCLOSURE
2. AGENT STORAGE TANK
3. EXPELLENT GAS CARTRIDGE
4. ANSUL AUTOMAN RELEASE
5. REGULATOR
6. KNOCKOUT FOR WIRING MICROSWITCH

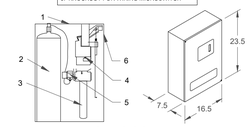

NOT TO SCALE

NOTES:

WET CHEMICAL FIRE PROTECTION SYSTEM TO BE ANSUL R-102, DESIGNED IN COMPLIANCE WITH UL 300 REQUIREMENTS.
-VERIFICATION OF ALL COOKING EQUIPMENT MAKE, MODEL AND LOCATION REQUIRED FOR ALL FIRE PROTECTION SYSTEMS.
-ALL FIRE SYSTEM PIPING IS STANDARDLY TO THE RIGHT END OF THE HOOD UNLESS A WALL IS LOCATED ON THE RIGHT END.
-ANSUL AUTOMAN RELEASE TO BE LOCATED WITHIN 60" OF HOOD.

THE BASIC FIRE SYSTEM WILL INCLUDE THE FOLLOWING:
-GAS SHUT-OFF VALVE, IF REQUIRED, TO BE SUPPLIED BY MANUFACTURER (UP TO 2" DIAMETER AS STANDARD), AND INSTALLED BY A LICENSED PLUMBER.
-MICRO SWITCH TO BE SUPPLIED BY MANUFACTURER FOR CONNECTION TO, BUT NOT LIMITED TO, BUILDING ALARM SYSTEM(S), EXHAUST AND SUPPLY FANS AND ELECTRICAL POWER SHUT DOWN. FIELD WIRING AND CONNECTIONS TO BE PERFORMED BY A LICENSED ELECTRICIAN.

THE BASIC FIRE SYSTEM DOES NOT INCLUDE THE FOLLOWING:
-FULL DUMP TEST OTHER THAN WHT IS SPECIFIED PER THE INSTALLATION MANUAL, OR TO SATISFY A STATE OR LOCAL CODE. PERMIT AND TESTING FEES ARE NOT INCLUDED UNLESS NOTED UNDER THE EQUIPMENT SCHEDULE FOR THE FIRE SYSTEM.
-MORE THEN TWO TRIPS TO THE JOBSITE OR SPECIAL TRANSPORTATION, OR OVERNIGHT LODGING REQUIREMENTS IN REMOTE AREAS. NORMAL TRAVEL DISTANCE IS FIRST 50 MI. (80.5 KM) FROM OFFICE.
- SPECIAL CLASSES OR ADDITIONAL LABOR FOR ACCESS TO SECURITY SENSITIVE AREAS.
-INSTALLATION OF GAS SHUT-OFF VALVE.
-SPECIAL DRAWINGS REQUIRED TO SATISFY STATE OR LOCAL CODE. PLAN EXAMINATION FEES, PE OR FS APPROVAL STAMP.
-UNION LABOR, GOVERNMENT LABOR, OR PREVAILING WAGES REQUIRED FOR FINAL FIELD HOOK-UP.
-ANY AND ALL ELECTRICAL COMPONENTS/CONNECTIONS REQUIRED TO SHUT DOWN FANS, SHUT OFF DEVICE FOR ELECTRIC COOKING EQUIPMENT (SHUNT TRIP BREAKER), OR ACTIVATE AN ALARM SYSTEM, ETC.
-ANY DISMANTLING OR REASSEMBLY REQUIRED TO GAIN ACCESS TO THE FIRE SUPPRESSION PIPING LOCATED ON THE TOP OF THE HOOD.
-ROUGH-IN HIDDEN CONDUIT FOR REMOTE PULL STATION OR GAS VALVE (FLUSH MOUNTED PULL STATION).
-INSTALLATION OF MORE THAN (1) REMOTE PULL STATIONS OR DISTANCES GREATER THAN 20 FT (6.1M.).
-PARTS OR LABOR REQUIRED TO CORRECT PIPING DUE TO COOKING EQUIPMENT CHANGES OR DEVIATION FROM PLANS. OR ANY CHARGES FOR MISSING OR ADDITIONAL PARTS OTHER THEN THOSE INDICATED ON THE FIRE SUPPRESSION DETAIL.

WIRING DIAGRAMS
W/DPDT MICRO SWITCH

DPDT SWITCHES PROVIDED BY MANUFACTURER MAY BE WIRED PER TYPICAL EXAMPLES SHOWN. VERIFY WITH LOCAL CODES AND EQUIPMENT SUPPLIED AS THE CONNECTION NEEDED FOR YOUR INSTALLATION.

CONNECTION TO BUILDINGS ALARM

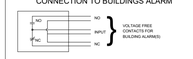

CONNECTION TO COOKING EQUIPMENT SHUT DOWN

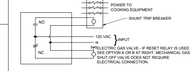

CONNECTION TO FAN SHUT DOWN

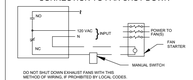

DO NOT SHUT DOWN EXHAUST FANS WITH THIS METHOD OF WIRING IF PROHIBITED BY LOCAL CODES.

NOTES:
1. ——— DENOTES FIELD INSTALLATION.
2. - - - - - - - - DENOTES FACTORY INSTALLATION.
3. DO NOT USE BLACK WIRE ON SNAP-ACTION SWITCH IN NORMAL INSTALLATION. BLACK WIRE TO BE USED ONLY FOR EXTRANEOUS ALARM, LIGHT CIRCUITS, ETC.

ISSUE FOR BID - 2/03/2020 NOT FOR CONSTRUCTION

PROJECT
1/16/2020 LAKESIDE EQUESTRIAN CENTER

MARK

FIRE SUPPRESSION

ACCUREX SOUTHERN CA & HAWAII
DAVID SPERLING
DAVID.SPERLING@ACCUREX.COM
(509)430-5326

ACCUREX

SHEET: FS-H2

FOOD SERVICE DESIGN GROUP
FSDG 1202 MARKET STREET TEL: (619) 239-8156
SAN DIEGO, CA.92101 FAX: (619) 239-2686
www.fsdesigngroup.com
INNOVATIVE FOOD SERVICE DESIGN

DEPARTMENT OF PARKS AND RECREATION
COUNTY OF SAN DIEGO
5500 OVERLAND DRIVE, SUITE 410 SAN DIEGO, CALIFORNIA 92123

COUNTY OF SAN DIEGO PARKS AND RECREATION

NO.	REVISIONS	APPR.	DATE
Rev	Description		Date

DESIGNED BY: WSA
DRAWN BY: WSA
CHECKED BY: WSA
PROJECT MANAGER:

LAKESIDE EQUESTRIAN FACILITY
Hood drawings & specifications

SCALE AS SHOWN
SHEET 22
PROJ. NO. 1020367
OF 68
FILE NO.

D:\Archive\WSA - Lakeside Equestrian Center\Construction Drawings\Addendum\ Index\Lakeside Equestrian Center_CD-1_Abbreviated Index 0006.rvt

-1 0 1 2 3 4 5 6 7 8 9 10

FOR REDUCED PLANS
ORIGINAL SCALE IS IN INCHES

CONTROL INFORMATION

MARK	ELECTRICAL CONTROL PACKAGE		USER INTERFACE		FANS CONTROLLED				
	MODEL	LOCATION	TYPE	LOCATION	MARK	TYPE	VOLT	PHASE	HP
CONTROLS	XFCC	SHIP LOOSE	SWITCHES	ON CONTROL PACKAGE	EF-1	EXHAUST	208	3	5
					MUA-1	SUPPLY	208	3	5

CONTROL FEATURES

- CONTROL PANEL ENCLOSURE - 16 GA 300 SERIES STAINLESS STEEL ENCLOSURE (NEMA-1) - DIMENSIONS 12 X 20 X 6
- STARTERS PROVIDED IN CONTROL PANEL - QTY 2
- 2 POSITION LIGHT SWITCH - QTY 1
- 2 POSITION FAN SWITCH - QTY 1
- -FACTORY MOUNTED EXHAUST TEMPERATURE SENSORS - QTY 1
- TURN ON EXHAUST IN FIRE
- LIGHTS OUT IN FIRE
- POWER FOR SHUNT TRIP
- THERMAL OVERLOADS IN CABINET

Kitchen Fan Control Center (XFCC)
Electrical Prewire Package
LAKESIDE EQUESTRIAN CENTER

SYSTEM DRAWING NOTE

These drawings shall not be removed from this equipment.
For additional information call ACCUREX at 1-800-371-6858

ACCUREX

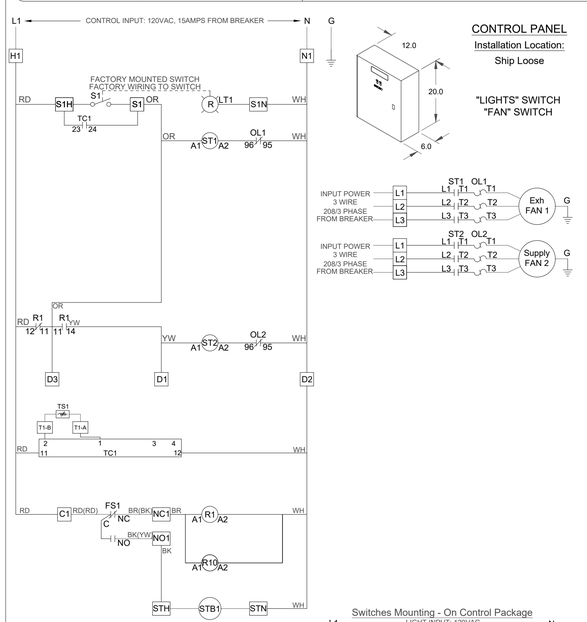

CONTROL PANEL
Installation Location:
Ship Loose

"LIGHTS" SWITCH
"FAN" SWITCH

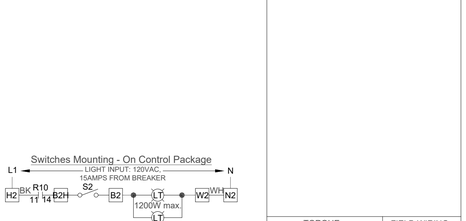

Panel Mark:	CONTROLS
Hood Mark(s):	HOOD-1
Serial Number:	WDSN#
Model:	XFCC

Motor	Fan Mark	HP	Volt	PH	FLA	Wire	Breaker
F1-E	EF-1	5	208	3	16.7	10 ga	25 amp
F2-S	MUA-1	5	208	3	16.7	10 ga	25 amp

1	Qty. Fan Switches (0-3)	X	Exhaust in Fire
	Qty. Light Switches (0-3)		MUA Interface
0	Qty. Temp. Switches (0-1)	X	Lights Out in Fire
	One Switch for L & F	X	Fire Relay (#1)
X	Digital Temperature Interlock		Extra Fire Relay (#2)
1	Mounted Sensors - Factory		Extra Fire Relay (#3)
0	Mounted Sensors - Field		DPDT Relay w/SF
	Heat Switch /Tempering SW		DPDT Relay w/EF
	Cool Switch		Off Delay Relay
	AD Switch		SF Failure Light
	Remote Switches		EF Failure Light
	Audible Alarm		Fan Failure Light (Appl.)
	Gas Reset/ Gas Off w/Fans		Aux. Supply Contact
	Power for Gas Solenoid		SDR
X	Power for Shunt Trip		

Spare Fire Switch Contact (dry contacts for building alarm)

Spare Relay Contacts (activated by FS1)
(can be used for shunt trip, alarms, etc.)

A ◜ open w/power at H1/N1 & fire system armed
closed on fire or no power

B ◜ closed w/power at H1/N1 & fire system armed
open on fire or no power

TORQUE:
TERMINAL BLOCKS = 8 LB.IN
GROUNDING BLOCKS = 8 LB.IN

FIELD WIRING:
USE MINIMUM
60° Copper Wire

LABEL DESCRIPTION

EF	Exhaust Fan	FACTORY WIRING
SF	Supply Fan	FIELD WIRING
ST	Starter	ALL WIRING 90°C 14 GA.
OL	Overload	UNLESS SPECIFIED
C	Contactor	
G	Ground	
S	Switch	WIRE COLOR
LT	Light	BK - black
FS	Fire Switch	BL - blue
R1	115VAC 3PDT Fire Relay	BR - brown
R2-8,12	115VAC DPDT Relay	OR - orange
R9	115VAC Time Delay Relay	PR - purple
R10,11,13	115VAC SPDT Relay	RD - red
AF	Air Flow Switch	YW - yellow
SV	Gas Solenoid	WH - white
STB	Shunt Trip Breaker	
D	Damper	
PB	PushButton	
EC	Evap Cooler	
TS	Temperature Sensor	
TC	Temperature Controller	

NOTES:
DRAWING SHOWN DE-ENERGIZED AT L1 (TERM. #H1), W/ FIRE SYSTEM ARMED (NON-FIRE MODE) . (NORMAL OPERATION, R1 & R2 ARE ENERGIZED) IF WALL MOUNTED PREWIRE, OR FIELD INSTALLED FIRE SYSTEM, THE FIRE SYSTEM MICROSWITCHES MUST BE FIELD WIRED.

LISTED #3994 — COMMERCIAL APPLIANCE OUTLET CENTER
ELECTRICAL RATINGS: 120V, 1PHASE, 60HZ, 15A
FILE #E313951

Wiring Diagram Code:

DOC NUMBER: #### REV: ####

TEMPERATURE INTERLOCK CALIBRATION

1. PRESS SET BUTTON. 'St1' WILL APPEAR.
2. PRESS UP OR DOWN BUTTON TO NAVIGATE TO SET POINT THAT YOU WISH TO ADJUST ('St1', 'St2', OR 'St3').
3. PRESS SET BUTTON TO VIEW CURRENT SET POINT. PRESS UP OR DOWN BUTTON TO ADJUST AND PRESS SET BUTTON TO STORE VALUE.
4. PRESS SET + DOWN BUTTONS TOGETHER TO EXIT OR WAIT 1 MINUTE.
5. CHECK SYSTEM OPERATION BEFORE MAKING ADDITIONAL ADJUSTMENTS.

Kitchen Fan Control Center (XFCC)
Electrical - Field Wiring Schematic
LAKESIDE EQUESTRIAN CENTER

Wiring Diagram Code:

DOC NUMBER: #### REV: ####

ACCUREX

Panel Mark:	CONTROLS
Location:	Ship Loose

POWER WIRING FOR XFCC CONTROL SYSTEM

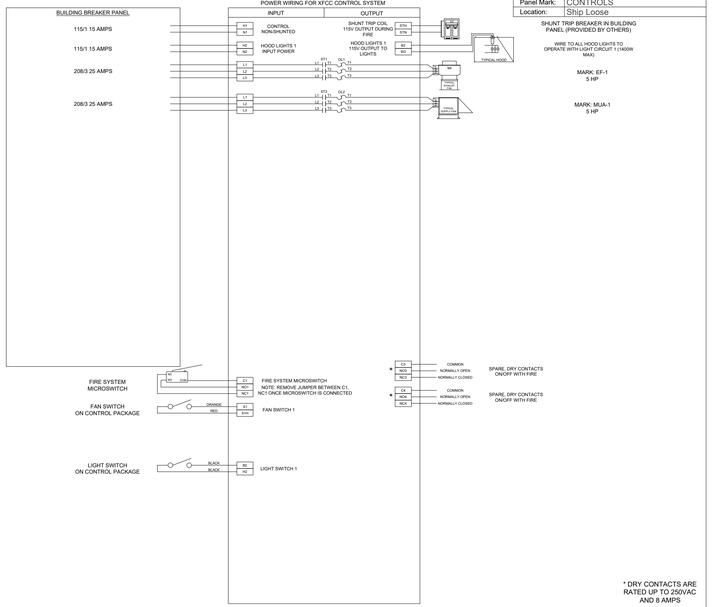

* DRY CONTACTS ARE RATED UP TO 250VAC AND 8 AMPS

CONTROL WIRING FOR XFCC CONTROL SYSTEM

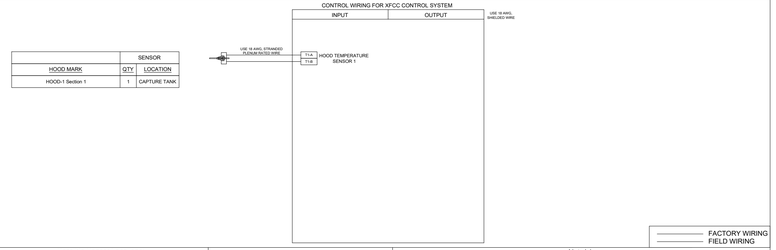

	SENSOR	
HOOD MARK	QTY	LOCATION
HOOD-1 Section 1	1	CAPTURE TANK

FACTORY WIRING
FIELD WIRING

Possible Sensor Locations:

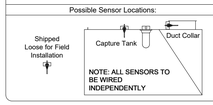

Note(s):

1. All wiring to be done by certified and qualified persons and must be wired to all local & national codes.
2. Exhaust and supply fan(s) shown as typical for representation of the fan. For exhaust or supply fan detail see fan submittals.
3. Exhaust and/or supply fans may be shown more than once for purpose of separating power versus control wiring.
4. Power wiring is the responsibility of the electrician. Control wiring is the responsibility of controls contractor. If there is no controls contractor, both power and control wiring is the responsibility of the electrician.
5. All ground wiring not shown on above diagram for clarity.
6. For further instructions please see the XFCC Installation and Operations Manual that was shipped with panel, or contact ACCUREX's Kitchen Ventilation team at 1-800-371-6858

ISSUE FOR BID - 2/03/2020 NOT FOR CONSTRUCTION

PROJECT
1/16/2020
LAKESIDE EQUESTRIAN CENTER

MARK
CONTROLS

ACCUREX SOUTHERN CA & HAWAII
DAVID SPERLING
DAVID.SPERLING@ACCUREX.COM
(509)430-5326

ACCUREX

SHEET: FS-H3

FOOD SERVICE DESIGN GROUP
FSDG
1202 MARKET STREET TEL: (619) 239-8156
SAN DIEGO, CA 92101 FAX: (619) 239-2686
www.fsdesigngroup.com
INNOVATIVE FOOD SERVICE DESIGN

DEPARTMENT OF PARKS AND RECREATION
COUNTY OF SAN DIEGO
5500 OVERLAND DRIVE, SUITE 410 SAN DIEGO, CALIFORNIA 92123

COUNTY OF SAN DIEGO PARKS AND RECREATION

NO.	REVISIONS	APPR.	DATE
Rev	Description		Date

DESIGNED BY: WSA
DRAWN BY: WSA
CHECKED BY: WSA
PROJECT MANAGER:

LAKESIDE EQUESTRIAN FACILITY
Hood drawings & specifications

SCALE AS SHOWN
PROJ. NO. 1020367
FILE NO.
SHEET 23 OF 68

D:\OneDrive\WSA - Lakeside Equestrian Center\Construction Drawing\Abbreviated Index\Lakeside Equestrian Center_CD-1_Abbreviated Index 0004.rvt

GENERAL NOTES

1. THESE PLANS ARE DIAGRAMMATIC ONLY, AND ILLUSTRATE GENERAL INTENT OF DUCTWORK / PIPE ROUTING, EQUIPMENT LOCATION, MOUNTING, ETC. CONTRACTOR SHALL MAINTAIN A CURRENT SET OF AS-BUILT DRAWINGS ON SITE AT ALL TIMES DURING CONSTRUCTION.

2. CODES: ALL HEATING, AIR CONDITIONING, AND VENTILATING WORK SHALL CONFIRM TO THE LATEST REQUIREMENTS OF THE CALIFORNIA BUILDING/MECHANICAL/PLUMBING CODES (2016), TITLE 24 ENERGY COMMISSION NON-RESIDENTIAL STANDARDS, N.F.P.A. AND THE LOCAL MECHANICAL CODE AND ANY OTHER LEGALLY CONSTITUTED BODY HAVING JURISDICTION THEREOF.

3. PERMITS: THE CONTRACTOR SHALL OBTAIN AND PAY FOR ALL FEES, PERMITS, AND LICENSES REQUIRED FOR THE INSTALLATION OF THE WORK AND SHALL DELIVER SAME TO THE OWNERS REPRESENTATIVE/ARCHITECT.

4. SHEET METAL DUCTWORK: ALL SUPPLY AND RETURN DUCTWORK MAINS AND BRANCHES SHALL BE A MINIMUM 26 GA. GALVANIZED SHEET METAL IN ACCORDANCE WITH THE LATEST SMACNA DUCT MANUAL, AND LOCAL CODES. SUPPLY AND RETURN DUCTWORK SHALL BE INSULATED PER NON-RESIDENTIAL TITLE 24.

5. FLEXIBLE DUCTWORK: DUCTWORK SHALL BE INSULATED HIGH PRESSURE FLEXIBLE DUCT WITH A FACTORY ASSEMBLY CONSISTING OF A GALVANIZED SPRING STEEL WIRE HELIX, A CONTINUOUS INNER LINER WRAPPED WITH NOMINAL 1 IN. THICK BY 1 LB/CU. DENSITY GLASS FIBER INSULATION. THE ASSEMBLY SHALL BE ENCLOSED IN A CLASS 1 FIRE RESISTIVE VAPOR BARRIER JACKET, FACTORY SEALED AT BOTH ENDS. THE FLEXIBLE DUCT SHALL BE LISTED BY U.L. AND SHALL CONFORM TO THE 90-A CLASS 1 REQUIREMENTS OF THE N.F.P.A. FLEXIBLE DUCT SHALL BE INSULATED IN FULLY EXTENDED CONDITION FREE OF SAGS AND KINKS AS FAR AS PRACTICAL. MINIMUM THERMAL RESISTANCE SHALL BE PER TITLE 24. FLEXIBLE DUCT SHALL BE GLASS-FLEX, CAL-FLEX, CASCO OR APPROVED EQUAL. FACTORY MADE FLEXIBLE AIR DUCTS AND CONNECTORS SHALL BE MAXIMUM 5'-0" IN LENGTH PER CMC 603.4.1.

6. EQUIPMENT: SHALL BE MODEL, TYPE AND CAPACITIES AS INDICATED ON THE DRAWINGS AND SHALL MEET OR EXCEED THE MINIMUM EFFICIENCY AS LISTED IN THE T24 BUILDING ENERGY EFFICIENCY STANDARDS.

7. CONTROLS: SHALL BE FURNISHED AND INSTALLED AS INDICATED ON THE DRAWINGS. THERMOSTATS: ALL THERMOSTATS TO BE TITLE-24 APPROVED. THERMOSTATS TO BE PROGRAMMABLE WITH NIGHT SET BACK FEATURES AND AUTOMATIC COOLING/ HEATING MODE CHANGE-OVER.

8. CERTIFICATE OF ACCEPTANCE AND ALL RELATED ACCEPTANCE DOCUMENTS SHALL BE SUBMITTED TO THE FIELD INSPECTOR DURING CONSTRUCTION. CERTIFICATE OF OCCUPANCY WILL NOT BE ISSUED UNTIL THESE FORMS ARE REVIEWED AND APPROVED.

9. ALL PIPING AND DUCTWORK SHALL BE INSULATED CONSISTENT WITH THE REQUIREMENTS OF SECTIONS 120.3, 120.4 AND 120.7 TITLE 24 ENERGY STANDARDS, AND CHAPTER 6 OF CMC.

10. ALL HVAC SYSTEMS SHALL MEET THE THE CONTROL REQUIREMENTS PER SECTION 110.2 AND 120.2 E.E.S.

11. ALL HVAC EQUIPMENT AND APPLIANCES SHALL MEET THE REQUIREMENTS PER SECTION 110.1-110.3, 110.5, 120.1-120.4 TITLE 24 ENERGY STANDARDS.

12. VENTILATION AIR SHALL NOT BE TRANSFERRED FROM ADJACENT DWELLING UNITS, GARAGES, OR CRAWLSPACES.

13. AIR INLETS (NOT EXHAUST) SHALL BE LOCATED AWAY FROM KNOWN CONTAMINANTS.

14. OCCUPIED AREAS OF MECHANICALLY VENTILATED BUILDINGS SHALL BE PROVIDED WITH AIR FILTRATION MEDIA FOR OUTSIDE AND RETURN AIR PRIOR TO OCCUPANCY THAT PROVIDES AT LEAST MERV OF 8.

15. AT THE TIME OF ROUGH INSTALLATION AND DURING STORAGE ON THE CONSTRUCTION SITE UNTIL FINAL START-UP OF HEATING, COOLING AND VENTILATION EQUIPMENT, ALL DUCT AND OTHER RELATED RELATED AIR DISTRIBUTION COMPONENT OPENINGS SHALL BE COVERED WITH TAPE, PLASTIC, SHEET METAL OR OTHER METHODS ACCEPTABLE TO THE ENFORCING AGENCY TO REDUCE THE AMOUNT OF DUST, WATER AND DEBRIS WHICH MAY ENTER THE SYSTEM PER SECTION 5.504.3 OF THE CALIFORNIA GREEN BUILDING.

16. EXHAUST DUCTS SHALL BE EQUIPPED WITH BACK-DRAFT DAMPERS PER SEC. 504.0 CMC.

17. IN ADDITION TO TESTING AND ADJUSTING, BEFORE A NEW SPACE CONDITIONING SYSTEM SERVING A BUILDING OR SPACE IS OPERATED FOR NORMAL USE, BALANCE THE SYSTEM IN ACCORDANCE WITH THE PROCEDURES DEFINED BY THE TESTING, ADJUSTING AND BALANCING BUREAU NATIONAL STANDARDS, NEBB PROCEDURAL STANDARDS, OR AABC NATIONAL STANDARDS.

18. PROVIDE THE BUILDING OWNER OR REPRESENTATIVE WITH DETAILED OPERATING AND MAINTENANCE INSTRUCTIONS AND COPIES OF GUARANTEES/WARRANTIES FOR EACH SYSTEM. O&M INSTRUCTIONS SHALL BE CONSISTENT WITH OSHA REQUIREMENTS IN CCR, TITLE 8, SECTION 5142, AND OTHER REGULATIONS.

19. CALIFORNIA MECHANICAL CODE 2016 (CMC 2016), CALIFORNIA PLUMBING CODE 2016 (CPC 2016) AND 2016 TITLE 24 ENERGY STANDARDS ARE THE CURRENT CODES/STANDARDS THAT ARE APPLICABLE TO THIS PROJECT.

20. PROVIDE SMOKE DETECTORS IN MAIN SUPPLY DUCTS OF AIR MOVING SYSTEMS EXCEEDING 2,000 CFM.

21. ROOF ACCESS LADDER SHALL COMPLY WITH SECTION 304 CMC.

22. EES INSTALLATION AND ACCEPTANCE FORMS TO BE ASSEMBLED AND POSTED WEATHER-PROTECTED WITHIN STRUCTURE. APPLICABLE FORMS TO BE COMPLETED BY CONTRACTORS/INSTALLERS FOR REVIEW BY INSPECTORS PRIOR TO FINAL INSPECTION. EES 10-103(A)3, 10-103(B)1.B

23.. FACTORY MADE FLEXIBLE AIR DUCTS AND CONNECTORS SHALL BE MAXIMUM 5'-0" IN LENGTH PER CMC 603.4.1.

-1 0 1 2 3 4 5 6 7 8 9 10

FOR REDUCED PLANS
ORIGINAL SCALE IS IN INCHES

LEGEND

SYMBOL	ABBREVIATION	DESCRIPTION
		CEILING DIFFUSER
		RETURN REGISTER/RETURN GRILLE
		EXHAUST REGISTER/EXHAUST GRILLE
T UNIT #	T-STAT	THERMOSTAT, MOUNT AT 48" AFF
	MVD	MANUAL VOLUME DAMPER
CD	C.D.	CONDENSATE DRAIN LINE (REFER TO PLBG DRAWINGS)
	DN.	DOWN OR DROP
	UP	RISE OR RISER
UC	UC	UNDERCUT DOOR 1/2" BY GC
	AC	AIR CONDITIONER
	AFF	ABOVE FINISHED FLOOR
	CFM	CUBIC FEET PER MINUTE
	EF	EXHAUST FAN
	FC	FLEXIBLE CONNECTION
	OBD	OPPOSED BLADE DAMPER
	CFM	CUBIC FEET PER MINUTE
SD	SD	SMOKE DETECTOR (DUCT MOUNTED)
	EAT	ENTERING AIR TEMPERATURE
	ESP	ETERNAL STATIC PRESSURE (INCHES WATER COLUMN)
	(E)	EXISTING
	E.E.S.	ENERGY EFFICIENCY STANDARDS
	(N)	NEW
	OA	OUTSIDE AIR
	EA	EXHAUST AIR
	RA	RETURN AIR
	SA	SUPPLY AIR
	EER	ENERGY EFFICIENCY RATIO
	FT	FEET
	FPM	FEET PER MINUTE
	FLA	FULL LOAD AMPS
		DUCT TRANSITION - ROUND TO RECTANGULAR
	HZ	HERTZ
	LAT	LEAVING AIR TEMPERATURE
	LBS	POUNDS
	NEC	NATIONAL ELECTRICAL CODE
	NO	NUMBER
	MBH	BRITISH THERMAL UNITS PER HOUR (THOUSANDS)
	MCA	MINIMUM CIRCUIT AMPACITY
	MOCP	MAXIMUM OVERLOAD CIRCUIT PROTECTION
	PH	PHASE
	POC	POINT OF CONNECTION
	POD	POINT OF DISCONNECT
	RF	RETURN FAN
	RPM	REVOLUTIONS PER MINUTE
	SF	SUPPLY FAN
	TEMP	TEMPERATURE
	TYP	TYPICAL

TITLE 24 NOTES

1. INSULATION SHALL MEET THE CALIFORNIA QUALITY STANDARD PER SECTION 118 CURRENT ENERGY EFFICIENCY STANDARDS (E.E.S.).

2. ALL PIPING AND DUCTWORK SHALL BE INSULATED CONSISTENT WITH THE REQUIREMENTS OF SECTIONS 120.4.

3. ALL HVAC SYSTEMS SHALL MEET THE CONTROL REQUIREMENTS PER SECTION 110.2(b) AND 110.2(c).

4. CERTIFICATE OF ACCEPTANCE AND ALL RELATED ACCEPTANCE DOCUMENTS SHALL BE SUBMITTED TO THE FIELD INSPECTOR DURING CONSTRUCTION. CERTIFICATE OF OCCUPANCY WILL NOT BE ISSUED UNTIL THESE FORMS ARE REVIEWED AND APPROVED.

5. DOORS AND WINDOWS SHALL MEET THE MINIMUM INFILTRATION REQUIREMENTS PER SECTION 110.6(a) and 110.6(b).

6. KITCHEN VENTILATION SYSTEMS SHALL MEET THE REQUIREMENTS OF SECTION 110.2, 120.6 AND 120.8 E.E.S.

ISSUE FOR BID - 2/03/2020 NOT FOR CONSTRUCTION

SHEET: M0.0.1

REGISTERED PROFESSIONAL ENGINEER
JASON VANDER VEEN
No. 34874
Exp. June 30, 2020
MECHANICAL
STATE OF CALIFORNIA

VanderVeen ENGINEERING CONSULTANTS INC.

DEPARTMENT OF PARKS AND RECREATION
COUNTY OF SAN DIEGO
5500 OVERLAND DRIVE, SUITE 410 SAN DIEGO, CALIFORNIA 92123

NO.	REVISIONS	APPR.	DATE
Rev	Description		Date

DESIGNED BY: VEC
DRAWN BY: VEC
CHECKED BY: VEC
PROJECT MANAGER:

LAKESIDE EQUESTRIAN FACILITY
MECHANICAL LEGEND
AND NOTES

SCALE AS SHOWN
PROJ. NO. 1020367
FILE NO.
SHEET 24 OF 68

-1 0 1 2 3 4 5 6 7 8 9 10

FOR REDUCED PLANS
ORIGINAL SCALE IS IN INCHES

ISSUE FOR BID - 2/03/2020 NOT FOR CONSTRUCTION

SPLIT SYSTEM HEAT PUMP SCHEDULE

MARK	MFR. MODEL	COOLING			HEATING		ELECT.					WT. LBS.	LOCATION	SERVICE	QUANTITY	REMARKS
		TOTAL	SENSIBLE	SEER	BTUH	HSPF	V	PH	Hz	MCA	MOCP					
HP 1	DAIKIN RX36NMVJU	34,400 (BTUH)	22,160 (BTUH)	15.9	36,000	9.2	208	1	60	19.8	20	133	GRADE	BANQUET HALL	4	SINGLE ZONE. PROVIDE WITH FILTER DRIER. PROVIDE WITH 4" HOUSEKEEPING PAD. ROUTE REFRIGERATION LINES PER MANUFACTURERS REQUIREMENTS AND PROVIDE ALL ACCESSORIES FOR A FULLY FUNCTIONAL SYSTEM. SEE DETAIL 2/M003.
HP 2	DAIKIN RXN24NMVJU	22,000 (BTUH)	16,120 (BTUH)	15.0	22,000	8.2	208	1	60	18.3	20	97	GRADE	COMMERCIAL KITCHEN	2	SINGLE ZONE. PROVIDE WITH FILTER DRIER. PROVIDE WITH 4" HOUSEKEEPING PAD. ROUTE REFRIGERATION LINES PER MANUFACTURERS REQUIREMENTS AND PROVIDE ALL ACCESSORIES FOR A FULLY FUNCTIONAL SYSTEM. SEE DETAIL 2/M003.

*CONTRACTOR TO VERIFY EXACT QUANTITY PRIOR TO ORDERING.

SPLIT SYSTEM FAN COIL SCHEDULE

MARK	MFR. MODEL	CFM	ESP IN.W.G.	HP	OSA MIN	DESIGN AMBIENT	ELECT. DATA-FAN			WT. LBS.	LOCATION	SERVICE	QUANTITY	REMARKS
							V - Ø - Hz	MCA	MOCP					
FC 1	DAIKIN FTX36NVJU	915	0.5	64 WATTS	NAT	110°F/25°F	OUTDOOR UNIT POWERS INDOOR			38	WALL	BANQUET HALL	4	WALL HUNG. INSTALL PER MANUFACTURER REQUIREMENTS AND WIRED THERMOSTAT IN LOCKED ENCLOSURE. COORDINATE EXACT MOUNTING HEIGHT IN FIELD.
FC 2	DAIKIN FTXN24NMVJU	713	0.5	46 WATTS	NAT	110°F/25°F	OUTDOOR UNIT POWERS INDOOR			27	WALL	COMMERCIAL KITCHEN	2	

*CONTRACTOR TO VERIFY EXACT QUANTITY PRIOR TO ORDERING.

EXHAUST FAN SCHEDULE

UNIT NO.	LOCATION	UNIT	FAN TYPE	C.F.M.	EXT. S.P. (IN. W.G.)	SONES (HVI)	WATTS (HP)	AMPS	ELECTRICAL V./PH./HZ.	QTY.	WEIGHT (LBS)	MANUFACTURER & MODEL NO.	REMARKS
EF 1	ROOF	HOOD	UPBLAST	1600	1.0	14.2	0.75 HP	---	208/3/60	1	73	"COOK 150 ACRUB"	PROVIDE WITH ROOF CURB COMPATIBLE WITH SLOPED ROOF. INTERLOCK WITH MAU-1. PROVIDE WITH GREASE CUP AND VENTILATED ROOF CURB. SEE DETAIL 4/M003.
EF 2	CEILING	RESTROOM	CEILING	70	0.375	1.5	53 W	---	120/1/60	3	12	"COOK GC-146"	INTERLOCK WITH LIGHT SWITCH.PROVIDE WITH BACKDRAFT. SEE DETAIL 6/M003.

*CONTRACTOR TO VERIFY EXACT QUANTITY PRIOR TO ORDERING.

MAKE UP AIR UNIT SCHEDULE

MARK	AREA SERVED	UNIT LOCATION	CFM	DESIGN O.S.A. CFM	DESIGN AMBIENT (DEG. F.)	E.S.P. (IN. W.G.)	ELECTRICAL DATA				FLA	SONES	OPER. WEIGHT	MANUFACTURER & MODEL NO.	QTY.	REMARKS
							VOLTS	PH	HZ	HP						
MAU 1	HOOD	ROOF	1,280	100% OA	87/68	0.5	120	1	60	0.5	---	18.7	139	"COOK" 90KSP-B	1	MOUNT ON CURB COMPATIBLE WITH SLOPED ROOF AND VIBRATION ISOLATION. INTERLOCK WITH EF-1. SEE DETAIL 5 /M003.
MAU 2	BANQUET HALL	ROOF	535	100% OA	87/68	0.25	120	1	60	0.166	---	6.0	125	"COOK" 90KSP-B	1	MOUNT ON CURB COMPATIBLE WITH SLOPED ROOF AND VIBRATION ISOLATION. INTERLOCK WITH LIGHT SWITCHES

SHEET: M0.0.2

REGISTERED PROFESSIONAL ENGINEER
JASON VANDER VEEN
No. 34874
Exp. June 30, 2020
MECHANICAL
STATE OF CALIFORNIA

VanderVeen ENGINEERING CONSULTANTS INC.

DEPARTMENT OF PARKS AND RECREATION
COUNTY OF SAN DIEGO
5500 OVERLAND DRIVE, SUITE 410 SAN DIEGO, CALIFORNIA 92123

NO.	REVISIONS	APPR.	DATE
Rev	Description		Date

DESIGNED BY: VEC
DRAWN BY: VEC
CHECKED BY: VEC
PROJECT MANAGER:

LAKESIDE EQUESTRIAN FACILITY
MECHANICAL SCHEDULE

SCALE AS SHOWN
PROJ. NO. 1020367
FILE NO.
SHEET 25 OF 68

-1 0 1 2 3 4 5 6 7 8 9 10

FOR REDUCED PLANS
ORIGINAL SCALE IS IN INCHES

ISSUE FOR BID - 2/03/2020 NOT FOR CONSTRUCTION

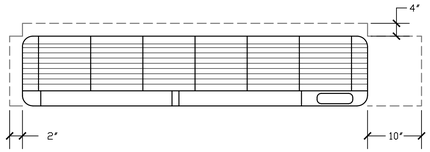

FRONT ELEVATION

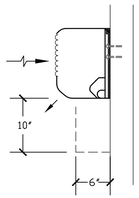

SIDE ELEVATION

TYPICAL FAN COIL DETAIL 3

SCALE: NONE

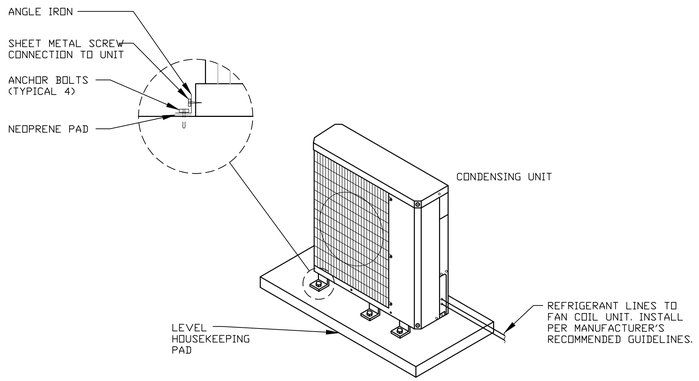

CONDENSING UNIT MOUNTING 2

SCALE: NONE

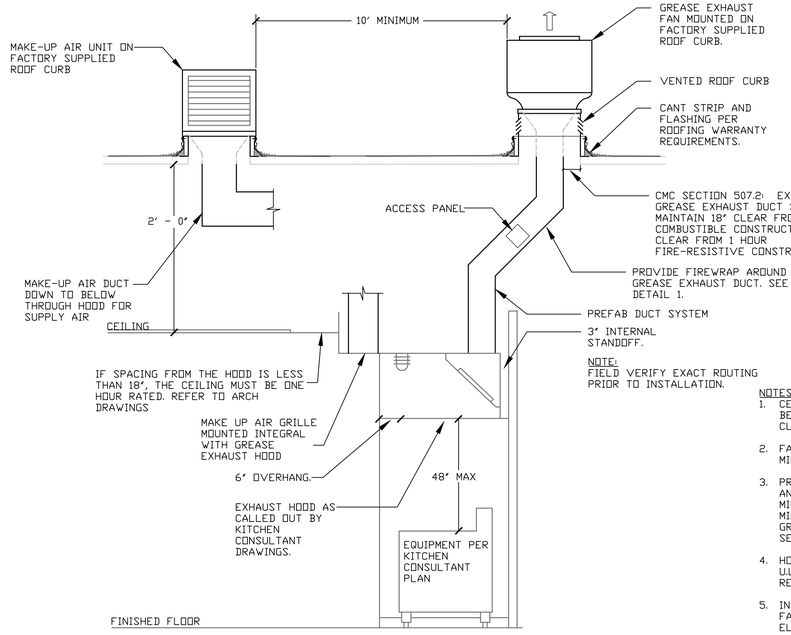

NOTES:
1. CENTRIFUGAL EXHAUST FANS SHALL BE HINGED AND CHAINED FOR CLEANING OF VERTICAL DUCT.
2. FAN DISCHARGE SHALL BE A MINIMUM OF 40" ABOVE ROOF.
3. PROVIDE CLEANOUT AT DUCT AT ANY CHANGE OF DIRECTION AND A MIN. OF ONE CLEANOUT. MAINTAIN A MIN. SLOPEOF 1/4" PER FOOT ON GREASE DUCT BACK TO HOOD (CMC SEC 510.3)
4. HOOD TO BE INSTALLED TO ALL U.L. SPECIFICATIONS. OVERHANG REQUIREMENTS SHALL APPLY.
5. INTERLOCK OPERATION OF EXHAUST FAN AND MAKE-UP AIR UNIT. (BY ELECTRICAL CONTRACTOR)
6. SOLID FUEL COOKING OPERATIONS SHALL BE EQUIPPED WITH SPARK ARRESTORS PER CMC 517.1.6

KITCHEN EQUIPMENT EXHAUST SYSTEM 1

SCALE: NONE

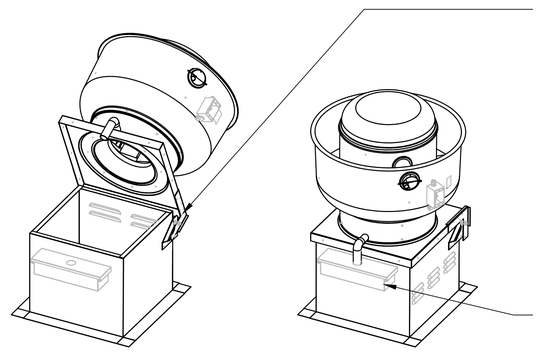

UPBLAST KITCHEN EXHAUST FAN ROOF CURB 4

SCALE: NONE

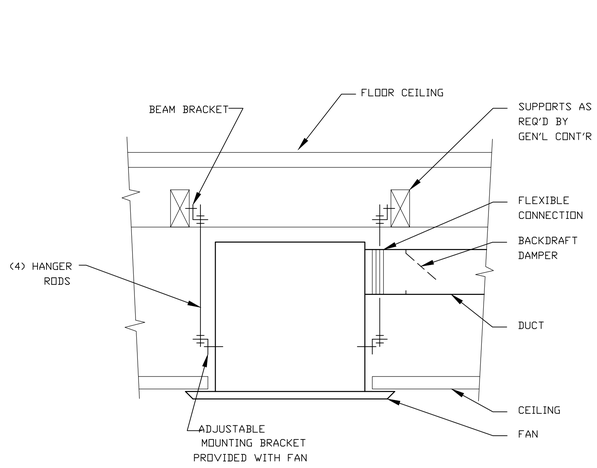

NOTE:
EXHAUST FAN AND DUCT WORK ARE BELOW FIRE RATED CEILING. PROVIDE RADIATION DAMPER IF ABOVE FIRE RATED CEILING.

CEILING EXHAUST/SUPPLY FAN MOUNTING 6

SCALE: NONE

MAKEUP AIR FAN 5

SCALE: NONE

SHEET: M0.0.3



VanderVeen ENGINEERING CONSULTANTS INC.

DEPARTMENT OF PARKS AND RECREATION
COUNTY OF SAN DIEGO
5500 OVERLAND DRIVE, SUITE 410 SAN DIEGO, CALIFORNIA 92123

NO.	REVISIONS	APPR.	DATE
Rev	Description		Date

DESIGNED BY: VEC
DRAWN BY: VEC
CHECKED BY: VEC
PROJECT MANAGER:

LAKESIDE EQUESTRIAN FACILITY
MECHANICAL DETAILS

SCALE: AS SHOWN
PROJ. NO. 1020367
FILE NO.
SHEET 26 OF 68

-1 0 1 2 3 4 5 6 7 8 9 10

FOR REDUCED PLANS
ORIGINAL SCALE IS IN INCHES

ISSUE FOR BID - 2/03/2020 NOT FOR CONSTRUCTION

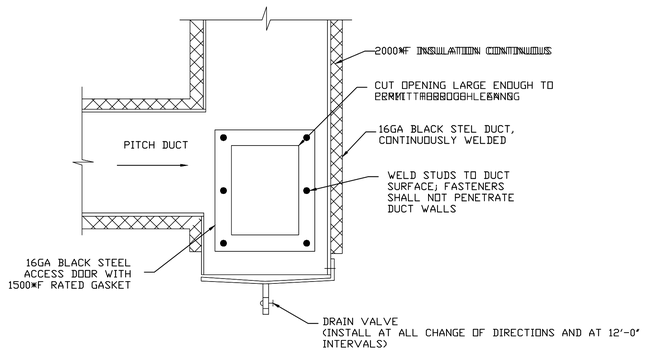

GREASE DUCT GREASE DETAIL

SCALE: NONE

3

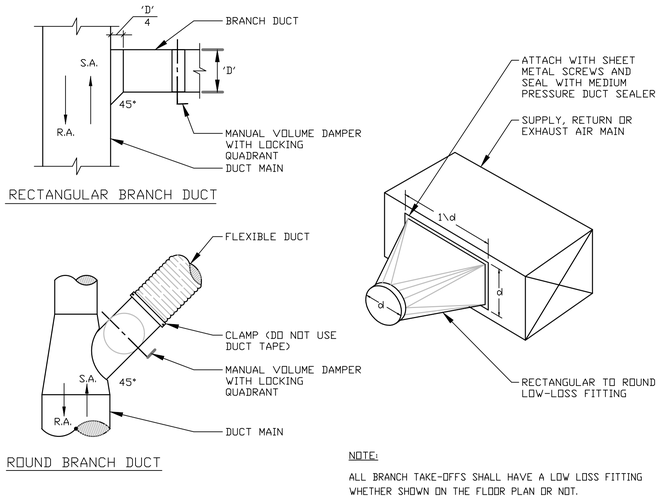

NOTE:

ALL BRANCH TAKE-OFFS SHALL HAVE A LOW LOSS FITTING WHETHER SHOWN ON THE FLOOR PLAN OR NOT.

TYPICAL BRANCH DUCT DETAILS

SCALE: NONE

2

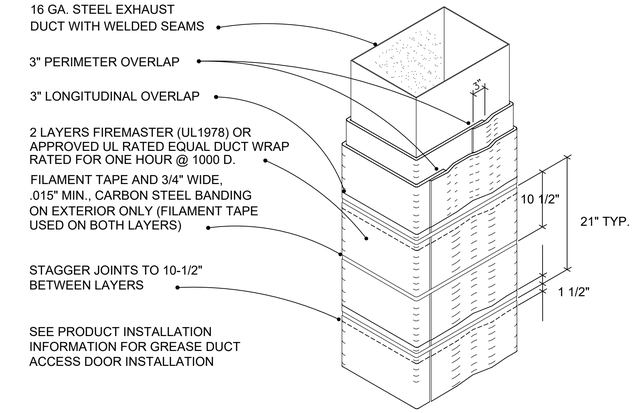

1

SHEET: M0.0.4

REGISTERED PROFESSIONAL ENGINEER
JASON VANDER VEEN
No. 34874
Exp. June 30, 2020
MECHANICAL
STATE OF CALIFORNIA

VanderVeen
ENGINEERING CONSULTANTS INC.

DEPARTMENT OF PARKS AND RECREATION
COUNTY OF SAN DIEGO
5500 OVERLAND DRIVE, SUITE 410 SAN DIEGO, CALIFORNIA 92123

NO.	REVISIONS	APPR.	DATE
Rev	Description		Date

DESIGNED BY:	VEC
DRAWN BY:	VEC
CHECKED BY:	VEC
PROJECT MANAGER:	

LAKESIDE EQUESTRIAN FACILITY

MECHANICAL DETAILS

SCALE	AS SHOWN
PROJ. NO.	1020367
FILE NO.	
SHEET	27 OF 68

FOR REDUCED PLANS
ORIGINAL SCALE IS IN INCHES

-1 0 1 2 3 4 5 6 7 8 9 10

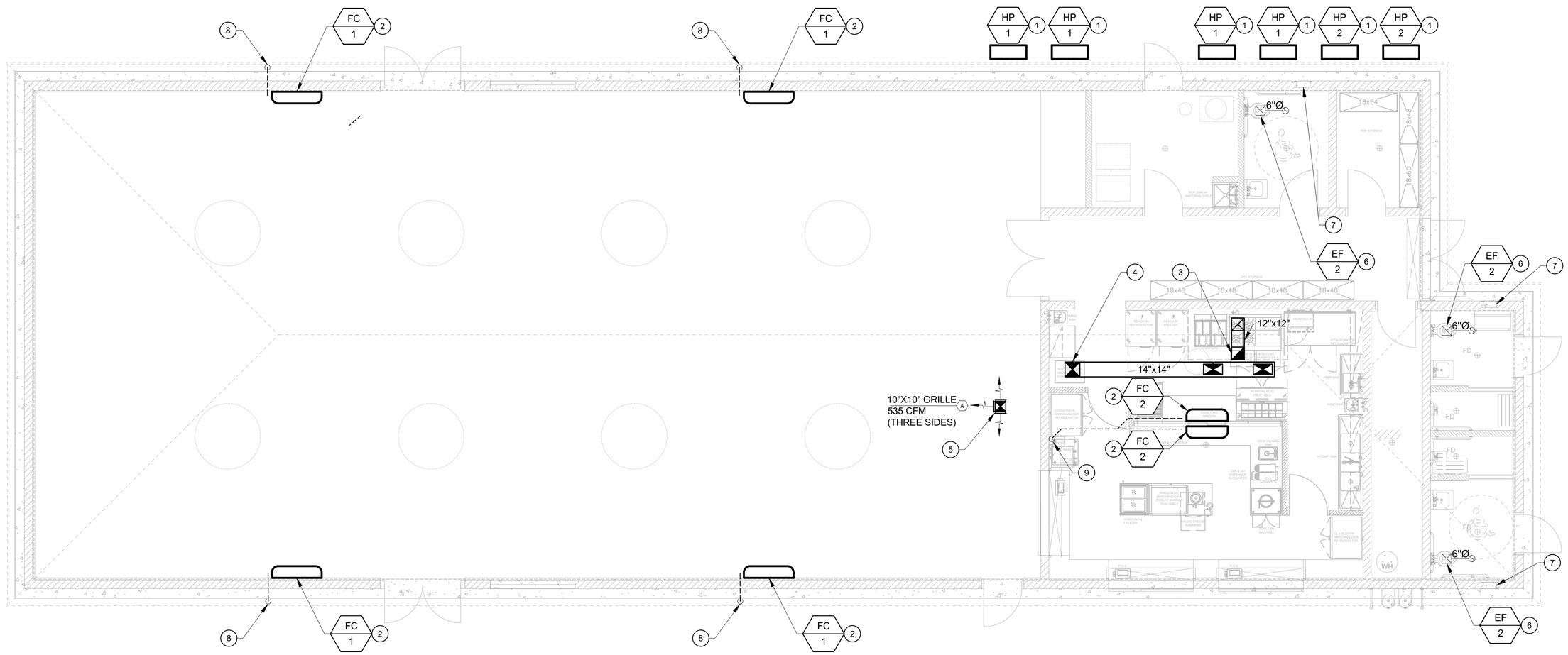

SHEET NOTES

1. CONDENSING UNIT ON HOUSEKEEPING PAD. TYPICAL. SEE DETAIL 2/M003.
2. WALL MOUNTED FAN COIL. SEE DETAIL 3/M003.
3. ROUTE 12"x12" GREASE EXHAUST DUCT UP TO EF-1 ON ROOF.PROVIDE OFFSET AND TRANSITION AS REQUIRED. SEE DETAIL 1/M003.
4. 14"x14" MAKE-UP AIR DUCT FROM MAU-1 ABOVE CONNECT INTO 18x10 PLENUM HOOD SUPPLY CONNECTIONS. BALANCE TO 640 CFM. TYP. 2 CONNECTIONS. SEE DETAIL 5/M003.
5. 10"x10" MAKE-UP AIR DUCT FROM MAKE-UP AIR UNIT ON ROOF. KEEP DUCT HIGH TO STRUCTURE.
6. CEILING MOUNTED EXHAUST FAN. ROUTE 6"ø EXHAUST DUCT UP THRU ROOF TO CAP.TYPICAL EACH UNIT.
7. 16"X24" KICKPROOF WALL VENT FOR MAKE UP AIR.
8. 3/4" CONDENSATE LINE ROUTE DOWN TO DRY WELL.
9. 3/4" CONDENSATE LINE ROUTE TO FLOOR SINK. REFER TO PLBG DRAWING FOR FLOOR SINK LOCATION.

GENERAL NOTES

1. COORDINATE ENTIRE INSTALLATION OF THE HVAC SYSTEM WITH THE WORK OF ALL OTHER TRADES PRIOR TO INSTALLATION. PROVIDE ALL FITTINGS, OFFSETS AND TRANSITIONS AS REQUIRED FOR A COMPLETE WORKABLE INSTALLATION.
2. ALL DIMENSIONS SHOWN ON THESE PLANS ARE APPROXIMATE AND MUST BE CONFIRMED ON SITE.
3. PROVIDE VOLUME DAMPERS AT ALL BRANCH DUCTWORK FOR AIR BALANCING.
4. PROVIDE 3/4" DOOR UNDERCUTS AT BATHROOM DOOR FOR MAKE-UP AIR.
5. FLEX DUCT SHALL BE LIMITED TO 5'-0"
6. COORDINATE FINAL LOCATION OF THERMOSTATS WITH OWNER PRIOR TO INSTALLATION.

HOOD AIR BALANCE

HOOD AIR BALANCE CALCULATIONS	
HOOD-1 TYPE-1	1,600 EXHAUST CFM
TOTAL EXHAUST CFM =	1,600 EXHAUST CFM
MAU-1	1,280 CFM MAKE-UP AIR
MAU-2	535 CFM MAKE-UP AIR
OSA FROM HP-1 UNITS =	50 CFM OUTSIDE AIR
OSA FROM HP-2 UNITS =	455 CFM OUTSIDE AIR
TOTAL MAKE-UP AIR/OUTSIDE CFM =	2,350 OUTSIDE AIR CFM.
KITCHEN IS NEGATIVE PRESSURIZED TO DINING AREA	

GREASE VELOCITY CALCS

MINIMUM 500 FPM AND MAXIMUM 2,500 FPM PER CMC 511.2
GREASE DUCT = 12"x12" = 1.0 SQ. FT.
TYPICAL EXHAUST FAN AIR = 1,600 CFM
VELOCITY = 1,600 CFM/ 1.0 SQ. FT = 1,600 FPM

MECHANICAL FLOOR PLAN MEETING ROOM 1
SCALE: 1/4"=1'-0"

SHEET: M1.1.1

REGISTERED PROFESSIONAL ENGINEER JASON VANDER VEEN No. 34874 June 30, 2020 MECHANICAL STATE OF CALIFORNIA

VanderVeen ENGINEERING CONSULTANTS INC.

ISSUE FOR BID - 2/03/2020 NOT FOR CONSTRUCTION

DEPARTMENT OF PARKS AND RECREATION
COUNTY OF SAN DIEGO
5500 OVERLAND DRIVE, SUITE 410 SAN DIEGO, CALIFORNIA 92123

NO.	REVISIONS	APPR.	DATE
Rev	Description		Date

DESIGNED BY: VEC
DRAWN BY: VEC
CHECKED BY: VEC
PROJECT MANAGER:

LAKESIDE EQUESTRIAN FACILITY
MECHANICAL FLOOR PLAN
MEETING ROOM

SCALE AS SHOWN
PROJ. NO. 1020367
FILE NO.
SHEET 28 OF 68

-1 0 1 2 3 4 5 6 7 8 9 10

FOR REDUCED PLANS
ORIGINAL SCALE IS IN INCHES

ISSUE FOR BID - 2/03/2020 NOT FOR CONSTRUCTION

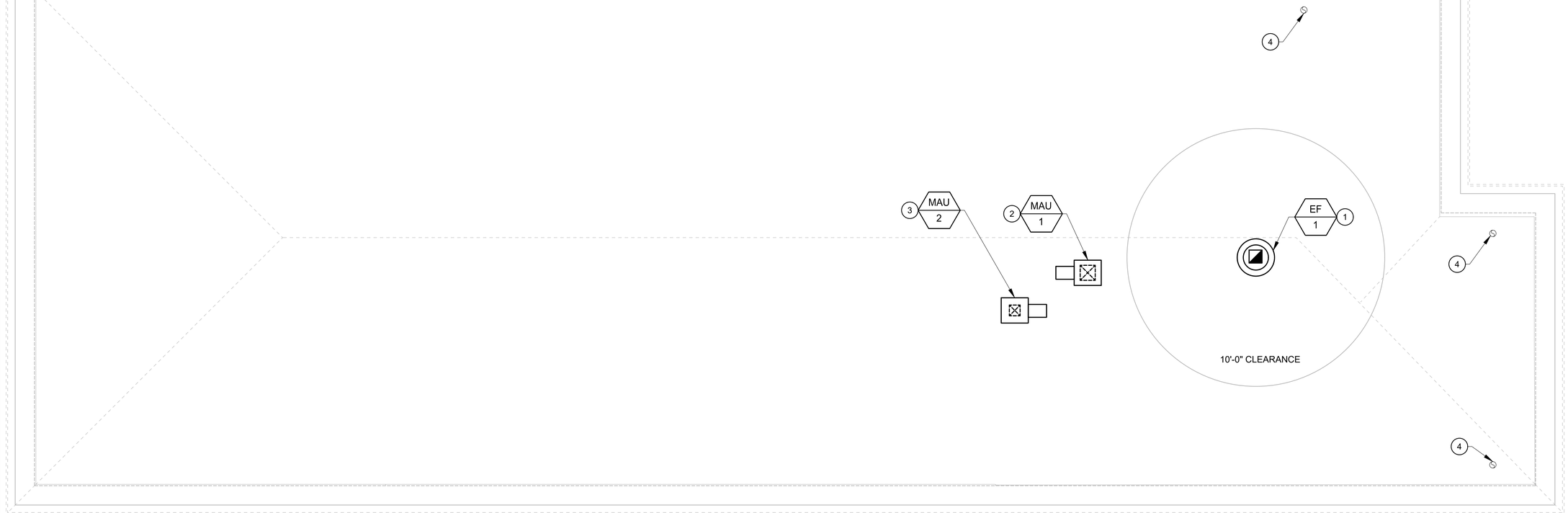

SHEET NOTES

1. UPBLAST GREASE RATED EXHAUST FAN. ROUTE 12"x12" GREASE EXHAUST DUCT DOWN AND CONNECT INTO KITCHEN HOOD. SEE DETAIL 4/M003.
2. MAKE-UP AIR UNIT. ROUTE 14"x14" MAKE-UP AIR DUCT DOWN THRU ROOF AND CONNECT INTO (2) 18x10 PLENUM HOOD SUPPLY CONNECTIONS. SEE DETAIL 5/M003.
3. OUTSIDE AIR VENTILATION UNIT. ROUTE 10"x10" OUTSIDE AIR DUCT DOWN THRU ROOF. SEE M2.01 FOR CONTINUATION.
4. 6"ø BATHROOM EXHAUST FAN DUCT UP THRU ROOF TO CAP.TYPICAL.

GENERAL NOTES

1. FIELD VERIFY EXACT LOCATION OF EXISTING PIPING AND DEVICES PRIOR TO INSTALLATION.
2. COORDINATE ENTIRE INSTALLATION OF THE HVAC SYSTEM WITH THE WORK OF ALL OTHER TRADES PRIOR TO INSTALLATION. PROVIDE ALL FITTINGS, OFFSETS AND TRANSITIONS AS REQUIRED FOR A COMPLETE WORKABLE INSTALLATION.
3. ALL DIMENSIONS SHOWN ON THESE PLANS ARE APPROXIMATE AND MUST BE CONFIRMED ON SITE.
4. PROVIDE SMOKE DETECTORS IN MAIN SUPPLY AIR DUCTS OF AIR MOVING SYSTEMS EXCEEDING 2,000 CFM.

MECHANICAL ROOF PLAN 1
SCALE: 1/4"=1'-0"

SHEET: M1.1.2

REGISTERED PROFESSIONAL ENGINEER
JASON VANDER VEEN
No. 34874
Exp. June 30, 2020
MECHANICAL
STATE OF CALIFORNIA

VanderVeen
ENGINEERING CONSULTANTS INC.

DEPARTMENT OF PARKS AND RECREATION
COUNTY OF SAN DIEGO
5500 OVERLAND DRIVE, SUITE 410 SAN DIEGO, CALIFORNIA 92123

NO.	REVISIONS	APPR.	DATE
Rev	Description		Date

DESIGNED BY: VEC
DRAWN BY: VEC
CHECKED BY: VEC
PROJECT MANAGER:

LAKESIDE EQUESTRIAN FACILITY
MECHANICAL ROOF PLAN

SCALE AS SHOWN
PROJ. NO. 1020367
FILE NO.
SHEET 29 OF 68

FOR REDUCED PLANS
ORIGINAL SCALE IS IN INCHES

ISSUE FOR BID - 2/03/2020 NOT FOR CONSTRUCTION

Project Name:	Lakeside Equestrian Concession Center	NRCC-PRF-01-E	Page 1 of 14
Project Address:	11055 Moreno Ave. Lakeside 92040	Calculation Date/Time:	13:19, Wed, Jan 22, 2020
Input File Name:	2020_05 - Lakeside Equestrian - T24.cibd19x		

A. GENERAL INFORMATION

1.	Project Location (city)	Lakeside	8.	Standards Version	Compliance2019
2.	CA Zip Code	92040	9.	Compliance Software (version)	EnergyPro 8.0
3.	Climate Zone	10	10.	Weather File	SAN-DIEGO-GILLESPIE_722907_CZ2010.epw
4.	Total Conditioned Floor Area in Scope	3,560 ft²	11.	Building Orientation (deg)	(N) 0 deg
5.	Total Unconditioned Floor Area	0 ft²	12.	Permitted Scope of Work	NewEnvelopeAndMechanical
6.	Total # of Stories (Habitable Above Grade)	1	13	Building Type(s)	Nonresidential
7.	Total # of dwelling units	0	14	Gas Type	NaturalGas

B. PROJECT SUMMARY

Table Instructions: Table B shows which building components are included in the performance calculation. If indicated as not included, the project must show compliance prescriptively if within permit application.

Building Components Complying via Performance				Building Components Complying Prescriptively		
Envelope	☒ Performance	Covered Process: Commercial Kitchens	☐ Performance	*The following building components are ONLY eligible for prescriptive compliance and should be documented on the NRCC form listed if within the scope of the permit application (i.e. compliance will not be shown on the NRCC-PRF-E).*	
	☐ Not Included		☒ Not Included		
Mechanical	☒ Performance	Covered Process: Computer Rooms	☐ Performance	Indoor Lighting (Unconditioned)§140.6	*NRCC-LTI-E is required*
	☐ Not Included		☒ Not Included	Outdoor Lighting §140.7	*NRCC-LTO-E is required*
Domestic Hot Water	☒ Performance	Covered Process: Laboratory Exhaust	☐ Performance	Sign Lighting §140.8	*NRCC -LTS-E is required*
	☐ Not Included		☒ Not Included	Mandatory Measures	
Lighting (Indoor Conditioned)	☐ Performance			*Electrical power systems, commissioning and solar ready requirements are mandatory and should be documented on the NRCC form listed if applicable (i.e. compliance will not be shown on the NRCC-PRF-E.)*	
	☒ Not Included			Electrical Power Distribution §110.11	*NRCC-ELC-E is required*
Solar Thermal Water Heating	☐ Performance			Commissioning §120.8	*NRCC-CXR-F is required*
	☒ Not Included			Solar Ready §110.10	*NRCC-SRA-E is required*

Project Name:	Lakeside Equestrian Concession Center	NRCC-PRF-01-E	Page 2 of 14
Project Address:	11055 Moreno Ave. Lakeside 92040	Calculation Date/Time:	13:19, Wed, Jan 22, 2020
Input File Name:	2020_05 - Lakeside Equestrian - T24.cibd19x		

C1. COMPLIANCE RESULTS FOR PERFORMANCE COMPONENTS (Annual TDV Energy Use, kBtu/ft² ²-yr)

COMPLIES

Energy Component	Standard Design (TDV)	Proposed Design (TDV)	Compliance Margin (TDV)[1]
Space Heating	0.15	0.70	-0.55
Space Cooling	107.22	94.95	12.27
Indoor Fans	137.24	145.76	-8.52
Heat Rejection	--	--	--
Pumps & Misc.	--	--	--
Domestic Hot Water	13.87	2.72	11.15
Indoor Lighting	86.18	86.18	--
ENERGY STANDARDS COMPLIANCE TOTAL	**344.66**	**330.31**	**14.35 (4.2%)**

[1] Notes: The number in parenthesis following the Compliance Margin in column 4, represents the Percent Better than Standard.

C2. RESULTS FOR 'ABOVE CODE' QUALIFICATIONS[1]

☐ This project is pursuing CalGreen Tier 1 ☐ This project is pursuing CalGreen Tier 2

Miscellaneous Energy Component	Standard Design (TDV)	Proposed Design (TDV)	Compliance Margin (TDV)[2]
Receptacle	123.16	123.16	0.0
Process	36.02	36.02	0.0
Other Ltg	--	--	--
Process Motors	--	--	--
COMPLIANCE TOTAL PLUS MISCELLANEOUS COMPONENTS	**503.84**	**489.49**	**14.4 (2.8%)**

[1] Notes: This table is used to document compliance with programs OTHER THAN Title 24 Part 6, if applicable.

D. EXCEPTIONAL CONDITIONS

This project includes partial performance compliance scope options. The building must show compliance with all other applicable compliance scope options (performance or prescriptively) before occupying.

This project uses the Simplified Geometry Performance Modeling Approach which is not capable of modeling daylighting controls and assumes the prescriptive Secondary Daylit Control requirements are met. PRESCRIPTIVE COMPLIANCE documentation (form NRCC-LTI-02-E) for the requirements of section 140.6(d) Automatic Daylighting Controls in Secondary Daylit Zones is required.

Project Name:	Lakeside Equestrian Concession Center	NRCC-PRF-01-E	Page 3 of 14
Project Address:	11055 Moreno Ave. Lakeside 92040	Calculation Date/Time:	13:19, Wed, Jan 22, 2020
Input File Name:	2020_05 - Lakeside Equestrian - T24.cibd19x		

E. HERS VERIFICATION

This Section Does Not Apply

F. ADDITIONAL REMARKS

This Section Does Not Apply

G. ENVELOPE GENERAL INFORMATION

1 Opaque Surfaces & Orientation	2 Total Gross Surface Area (ft²)	3 Total Fenestration Area (ft²)	4 Window to Wall Ratio (%)
North-Facing[1]	835 ft²	22 ft²	02.6%
East-Facing[2]	415 ft²	0 ft²	00.0%
South-Facing[3]	1,055 ft²	22 ft²	02.1%
West-Facing[4]	0 ft²	0 ft²	00.0%
Total	**2,305 ft²**	**44 ft²**	**01.9%**
Roof	3,560 ft²	0 ft²	00.0%

Notes:
[1] North-Facing is oriented to within 45 degrees of true north, including 45°00'00" east of north (NE), but excluding 45°00'00" west of north (NW).
[2] East-Facing is oriented to within 45 degrees of true east, including 45°00'00" south of east (SE), but excluding 45°00'00" north of east (NE).
[3] South-Facing is oriented to within 45 degrees of true south, including 45°00'00" west of south (SW), but excluding 45°00'00" east of south (SE).
[4] West-Facing is oriented to within 45 degrees of true west, including 45°00'00" north of due west (NW), but excluding 45°00'00" south of west (SW).

H. FENESTRATION ASSEMBLY SUMMARY §110.6

1. Fenestration Assembly Name / Tag or I.D.	2. Fenestration Type / Product Type / Frame Type	3. Certification Method[1]	4. Assembly Method	5. Area ft²	6. Overall U-factor	7. Overall SHGC	8. Overall VT	9. Status[2]
Dual Glaze Low-E	VerticalFenestration FixedWindow	NFRC Rated	Manufactured	44	0.36	0.25	0.50	N
	N/A							

[1] Newly installed fenestration shall have a certified NFRC Label Certificate or use the CEC default tables found in Table 110.6-A and Table 110.6-B. Center of Glass (COG) values are for the glass-only, determined by the manufacturer, and are shown for ease of verification. Site-built fenestration values are calculated per Nonresidential Appendix NA6 and are used in the analysis.
[2] Status: N - New, A – Altered, E – Existing

Project Name:	Lakeside Equestrian Concession Center	NRCC-PRF-01-E	Page 4 of 14
Project Address:	11055 Moreno Ave. Lakeside 92040	Calculation Date/Time:	13:19, Wed, Jan 22, 2020
Input File Name:	2020_05 - Lakeside Equestrian - T24.cibd19x		

I. ENVELOPE DETAILS §120.7 & §140.3

I1. OPAQUE SURFACE ASSEMBLY SUMMARY

1 Surface Name	2 Surface Type	3 Description of Assembly Layers	4 Area (ft²)	5 Framing Type	6 Cavity R-Value	7 Continuous R-Value	8 U-Factor / F-Factor / C-Factor	9 Status[1]
Slab On Grade9	UndergroundFloor	Slab Type = UnheatedSlabOnGrade Insulation Orientation = None Insulation R-Value = R0	3560	NA	0	NA	F-Factor: 0.730	N
Metal Roof with R-1911	Roof	Metal Standing Seam - 1/16 in. Metal framed roof, 24in. OC, 7.25in., R-21 Glass fiber batt - 5 1/2 in. R19 (CEC Default)	3560	Metal	21	18	U-Factor: 0.033	N
8 CMU Wall w/R-1313	ExteriorWall	Concrete - Part Grouted and Empty - 125 lb/ft3 - 8 in. Air - Cavity - Wall Roof Ceiling - 4 in. or more	2305	NA	0	NA	U-Factor: 0.281	N

[1] Status: N - New, A – Altered, E – Existing

I2. OVERHANG DETAILS

This Section Does Not Apply

I3. OPAQUE DOOR SUMMARY

This Section Does Not Apply

J. CRRC ROOFING PRODUCT SUMMARY §140.3

This Section Does Not Apply

K. HVAC SYSTEM SUMMARY §110.1 & §110.2

Project Name:	Lakeside Equestrian Concession Center	NRCC-PRF-01-E	Page 5 of 14
Project Address:	11055 Moreno Ave. Lakeside 92040	Calculation Date/Time:	13:19, Wed, Jan 22, 2020
Input File Name:	2020_05 - Lakeside Equestrian - T24.cibd19x		

K1. Dry System Equipment (furnaces, air handling units, heat pumps, VRF, etc.)

Dry System Equipment [1](Fan & Economizer info included below in Table N)

1	2	3	4	5	6	7	8	9	10
			Heating				Cooling		
Equipment Name	Equipment Type	Qty	Total Heating Output (kBtu/h)	Supp Heat Source (Y/N)	Supp Heat Output (kBtuh)	Efficiency	Total Cooling Output (kBtu/h)	Efficiency	Status[2]
HP-1	SZHP (Split1Phase)	2	23	No	0	HSPF-8.200	21	SEER-15.000 / EER-11.700	N
Kitchen3	Exhaust (NA)	1	0	No	0	NA	0	NA	N
HP-2	SZHP (Split1Phase)	4	37	No	0	HSPF-9.200	33	SEER-15.900 / EER-11.700	N

Status: N - New, A – Altered, E – Existing

K2. ECONOMIZER & FAN SYSTEMS SUMMARY §140.4[1]

1	2	3	4	5	6	7	8	9	10	11	12	13
				Supply Fan			Return Fan					
Name or Item Tag	System Type packaged, DOAS, etc.	Design OA	CFM	BHP	Watts	Control	CFM	BHP	Watts	Control	Economizer Type (if present)	Status[2]
HP-1	SZHP	40	713	0.500	436.0	ConstantVolume	NA	NA	NA	NA	NoEconomizer	N
HP-2	SZHP	114	915	0.500	436.0	ConstantVolume	NA	NA	NA	NA	NoEconomizer	N

Status: N - New, A – Altered, E – Existing

K3. EXHAUST FAN SUMMARY

1	2	3	4	5	6	7
System ID	Zone Name	Qty	CFM	Motor BHP	Motor Watts	Total Static Pressure (in H20)
Kitchen3	1-Kitchen	1	1,600	0.500	436.0	1.29

K4. Wet System Equipment (boilers, chillers, cooling towers, etc.

This Section Does Not Apply

Project Name:	Lakeside Equestrian Concession Center	NRCC-PRF-01-E	Page 6 of 14
Project Address:	11055 Moreno Ave. Lakeside 92040	Calculation Date/Time:	13:19, Wed, Jan 22, 2020
Input File Name:	2020_05 - Lakeside Equestrian - T24.cibd19x		

K5. SYSTEM FEATURES §120.2

1	2	3	4	5	6
System Name	Optimum Start	Window Interlocks per §140.4(n)	Evaporative Cooling	Heat Recovery	Other Controls
HP-1	No Optimum Start	NA	No Evaporative Cooler	No Heat Recovery	No DCV Controls, No ODC No Economizer No Supply Air Temp. Control
HP-2	No Optimum Start	NA	No Evaporative Cooler	No Heat Recovery	No DCV Controls, No ODC No Economizer No Supply Air Temp. Control
Water Heaters1 - SHW	NA	NA	NA	NA	Fixed Temperature Control, No ODC

Notes: This table includes controls related to the performance path only. For projects using the prescriptive path, mandatory and prescriptive controls requirements are documented on the NRCC-MCH-E.

K6. MECHANICAL VENTILATION AND REHEAT §120.1

1	2	3	4	5	6	7	8	9
	Mechanical Ventilation							
Zone Name	Ventilation Function	# hotel rooms	# of people	# of bedrooms	Supply OA CFM	Exhaust CFM	Conditioned Area (sf)	DCV or Occupant Sensor Controls, or Both
1-Kitchen	Food Service - Kitchen (cooking)	0	1.32	0	80	1600	530	NA
2-Banquet Hall	Misc - All others	0	101.01	0	455	0	3030	NA

K7. DISTRIBUTION SUMMARY §120.4/140.4[1]

1	2	3		4		5
	Dry System Distribution					
Equipment Name	Duct Leakage Verification Y/N	Ducts				Status[2]
		Insulation R-Value		Location		
HP-1	No	4.2		Other		N
HP-2	No	4.2		Other		N

Status: N - New, E – Existing

Multifamily or Hotel/Motel Occupancy? (If "Yes", see DOMESTIC/SERVICE HOT WATER SYSTEM SUMMARY)	No
Does the Project include Zonal Systems?	No

Project Name:	Lakeside Equestrian Concession Center	NRCC-PRF-01-E	Page 7 of 14
Project Address:	11055 Moreno Ave. Lakeside 92040	Calculation Date/Time:	13:19, Wed, Jan 22, 2020
Input File Name:	2020_05 - Lakeside Equestrian - T24.cibd19x		

K8. ZONAL SYSTEM AND TERMINAL UNIT SUMMARY § 140.4

1	2	3	4	5	6	7	8	9	10	11	12
			Rated Capacity (kBtuh)		Airflow (cfm)			Fan			
System ID	Zone Name	System Type	Heating	Cooling	Design	Min.	Min. Ratio	BHP	Watts	Cycles	ECM Motor
1-Kitchen-Trm	1-Kitchen	Uncontrolled	NA	NA	1280	NA	0.00	NA	NA	NA	☐
2-Banquet Hall-Trm	2-Banquet Hall	Uncontrolled	NA	NA	3660	NA	0.00	NA	NA	NA	☐

K9. EVAPORATIVE COOLER SUMMARY

This Section Does Not Apply

L. DOMESTIC/SERVICE HOT WATER SYSTEM SUMMARY

L1. DHW EQUIPMENT SUMMARY

1	2	3	4	5	6	7	8	9	10	11
DHW Name	Heater Element Type	Tank Type	Qty	Tank Vol (gal)	Rated Input (kBtu/h)	Efficiency	Tank Insulation R-value (Int/Ext)	Standby Loss Fraction	Heat Pump Type	Tank Location or Ambient Condition
Bradford White LC2PV50H762	Gas	Storage	1	50.00	76	Thrml. Eff.: 0.83	NA	SBLF: 0.010	NA	NA

L2. MULTI-FAMILY CENTRAL DHW SYSTEM DETAILS

This Section Does Not Apply

L3. SOLAR HOT WATER HEATING SUMMARY

This Section Does Not Apply

M. COVERED PROCESS SUMMARY §140.9

This Section Does Not Apply

Project Name:	Lakeside Equestrian Concession Center	NRCC-PRF-01-E	Page 8 of 14
Project Address:	11055 Moreno Ave. Lakeside 92040	Calculation Date/Time:	13:19, Wed, Jan 22, 2020
Input File Name:	2020_05 - Lakeside Equestrian - T24.cibd19x		

N. INDOOR LIGHTING SUMMARY §140.6

This Section Does Not Apply

Project Name:	Lakeside Equestrian Concession Center	NRCC-PRF-01-E	Page 9 of 14
Project Address:	11055 Moreno Ave. Lakeside 92040	Calculation Date/Time:	13:19, Wed, Jan 22, 2020
Input File Name:	2020_05 - Lakeside Equestrian - T24.cibd19x		

O. DECLARATION OF REQUIRED CERTIFICATES OF INSTALLATION

Table Instructions: Selections shall be made by Documentation Author to indicate which Certificates of Installation must be submitted for the features to be recognized for compliance. These documents must be retained and provided to the building inspector during construction and can be found online at: https://www.energy.ca.gov/title24/2019standards/2019_compliance_documents/Nonresidential_Documents/NRCI/

Building Component	YES	NO	Form/Title	Field Inspector Pass	Field Inspector Fail
Envelope	☒	☐	NRCI-ENV-01-E - Must be submitted for all buildings	☐	☐
Mechanical	☒	☐	NRCI-MCH-01-E - Must be submitted for all buildings	☐	☐
Plumbing	☒	☐	NRCI-PLB-01-E - Must be submitted for all buildings	☐	☐
	☐	☒	NRCI-PLB-02-E - Must be submitted for high-rise residential and hotel/ motel central hot water distribution systems to be recognized for compliance	☐	☐
	☐	☒	NRCI-PLB-03-E - Must be submitted for all buildings	☐	☐
	☐	☒	NRCI-PLB-21-E - Must be HERS-verified for central systems in high-rise residential hotel/ motel application	☐	☐
	☐	☒	NRCI-PLB-22-E - Must be HERS-verified for single dwelling unit systems in high-rise residential, hotel/motel application	☐	☐
Indoor Lighting	☐	☒	NRCI-LTI-01-E - Must be submitted for all buildings	☐	☐
	☐	☒	NRCI-LTI-02-E - Must be submitted for a lighting control system, or for an Energy Management Control System (EMCS) to be recognized for compliance	☐	☐
	☐	☒	NRCI-LTI-03-E - Must be submitted for a line-voltage track lighting integral current limiter, or for a supplementary overcurrent protection panel used to energize only line-voltage track lighting, to be recognized for compliance	☐	☐
	☐	☒	NRCI-LTI-04-E - Must be submitted for two interlocked systems serving an auditorium, a convention center, a conference room, a multipurpose room, or a theater to be recognized for compliance	☐	☐
	☐	☒	NRCI-LTI-05-E - Must be submitted for a Power Adjustment Factor (PAF) to be recognized for compliance	☐	☐
	☐	☒	NRCI-LTI-06-E - Must be submitted for additional wattage installed in a video conferencing studio to be recognized for compliance	☐	☐
Outdoor Lighting	☐	☒	NRCI-LTO-01-E - Must be submitted for all buildings	☐	☐
	☐	☒	NRCI-LTO-02-E - Must be submitted for EMCS Lighting Control system	☐	☐
Sign Lighting	☐	☒	NRCI-LTS-01-E - Must be submitted for all buildings	☐	☐
Electrical	☐	☒	NRCI-ELC-01-E - Must be submitted for all buildings	☐	☐
Photovoltaic	☐	☒	NRCI-SPV-01-E - Must be submitted for all buildings	☐	☐

Project Name:	Lakeside Equestrian Concession Center	NRCC-PRF-01-E	Page 10 of 14
Project Address:	11055 Moreno Ave. Lakeside 92040	Calculation Date/Time:	13:19, Wed, Jan 22, 2020
Input File Name:	2020_05 - Lakeside Equestrian - T24.cibd19x		

O. DECLARATION OF REQUIRED CERTIFICATES OF INSTALLATION

Table Instructions: Selections shall be made by Documentation Author to indicate which Certificates of Installation must be submitted for the features to be recognized for compliance. These documents must be retained and provided to the building inspector during construction and can be found online at: https://www.energy.ca.gov/title24/2019standards/2019_compliance_documents/Nonresidential_Documents/NRCI/

Building Component	YES	NO	Form/Title	Field Inspector Pass	Field Inspector Fail
Covered Process	☐	☒	NRCI-PRC-01-E - Must be submitted for all Refrigerated Warehouses	☐	☐

P. DECLARATION OF REQUIRED CERTIFICATES OF ACCEPTANCE

Table Instructions: Selections shall be made by Documentation Author to indicate which Certificates of Acceptance must be submitted for the features to be recognized for compliance. These documents must be provided to the building inspector during construction and must be completed through an Acceptance Test Technician Certification Provider (ATTCP). For more information visit:https://www.energy.ca.gov/title24/2019standards/2019_compliance_documents/Nonresidential_Documents/NRCA/

Building Component	YES	NO	Form/Title	Field Inspector Pass	Field Inspector Fail
Envelope	☒	☐	NRCA-ENV-02-F - NRFC label verification for fenestration	☐	☐
	☐	☐	NRCA-ENV-03-F - Daylighting Design PAFs	☐	☐

Project Name:	Lakeside Equestrian Concession Center	NRCC-PRF-01-E	Page 11 of 14
Project Address:	11055 Moreno Ave. Lakeside 92040	Calculation Date/Time:	13:19, Wed, Jan 22, 2020
Input File Name:	2020_05 - Lakeside Equestrian - T24.cibd19x		

P. DECLARATION OF REQUIRED CERTIFICATES OF ACCEPTANCE

Table Instructions: Selections shall be made by Documentation Author to indicate which Certificates of Acceptance must be submitted for the features to be recognized for compliance. These documents must be provided to the building inspector during construction and must be completed through an Acceptance Test Technician Certification Provider (ATTCP). For more information visit:https://www.energy.ca.gov/title24/2019standards/2019_compliance_documents/Nonresidential_Documents/NRCA/

Building Component	YES	NO	Form/Title	Field Inspector Pass	Field Inspector Fail
Mechanical	☐	☐	NRCA-MCH-02-A Outdoor Air must be submitted for all newly installed HVAC units. Note: MCH02-A can be performed in conjunction with MCH-07-A Supply Fan VFD Acceptance (if applicable) since testing activities overlap	☐	☐
	☐	☐	NRCA-MCH-03-A Constant Volume Single Zone HVAC	☐	☐
	☐	☐	NRCA-MCH-04(a)-A Air Distribution Duct Leakage - HERS Verification required	☐	☐
	☐	☐	NRCA-MCH-04(b)-A Air Distribution Duct Leakage - ATT only	☐	☐
	☐	☐	NRCA-MCH-05-A Air Economizer Controls	☐	☐
	☐	☐	NRCA-MCH-06-A Demand Control Ventilation Systems Acceptance must be submitted for all systems required to employ demand controlled ventilation (refer to §120.1(c)3) can vary outside ventilation flow rates based on maintaining interior carbon dioxide (CO2) concentration setpoints	☐	☐
	☐	☐	NRCA-MCH-07-A Supply Fan Variable Flow Controls	☐	☐
	☐	☐	NRCA-MCH-08-A Valve Leakage Test	☐	☐
	☐	☐	NRCA-MCH-09-A Supply Water Temperature Reset Controls	☐	☐
	☐	☐	NRCA-MCH-10-A Hydronic System Variable Flow Controls	☐	☐
	☐	☐	NRCA-MCH-11-A Automatic Demand Shed Controls	☐	☐
	☐	☐	NRCA-MCH-12-A FDD for Packaged Direct Expansion Units	☐	☐
	☐	☐	NRCA-MCH-13-A Automatic FDD for Air Handling Units and Zone Terminal Units Acceptance	☐	☐
	☐	☐	NRCA-MCH-14-A Distributed Energy Storage DX AC Systems Acceptance	☐	☐
	☐	☐	NRCA-MCH-15-A Thermal Energy Storage (TES) System Acceptance	☐	☐
	☐	☐	NRCA-MCH-16-A Supply Air Temperature Reset Controls	☐	☐
	☐	☐	NRCA-MCH-17-A Condenser Water Temperature Reset Controls	☐	☐
	☐	☐	NRCA-MCH-18 Energy Management Control Systems	☐	☐
	☐	☐	NRCA-MCH-19 Occupancy Sensor Controls	☐	☐

Project Name:	Lakeside Equestrian Concession Center	NRCC-PRF-01-E	Page 12 of 14
Project Address:	11055 Moreno Ave. Lakeside 92040	Calculation Date/Time:	13:19, Wed, Jan 22, 2020
Input File Name:	2020_05 - Lakeside Equestrian - T24.cibd19x		

P. DECLARATION OF REQUIRED CERTIFICATES OF ACCEPTANCE

Table Instructions: Selections shall be made by Documentation Author to indicate which Certificates of Acceptance must be submitted for the features to be recognized for compliance. These documents must be provided to the building inspector during construction and must be completed through an Acceptance Test Technician Certification Provider (ATTCP). For more information visit:https://www.energy.ca.gov/title24/2019standards/2019_compliance_documents/Nonresidential_Documents/NRCA/

Building Component	YES	NO	Form/Title	Field Inspector Pass	Field Inspector Fail
Indoor Lighting	☐	☒	NRCA-LTI-02-A - Occupancy Sensors and Automatic Time Switch Controls	☐	☐
	☐	☒	NRCA-LTI-03-A - Automatic Daylight Controls	☐	☐
	☐	☒	NRCA-LTI-04-A - Demand Responsive Lighting Controls	☐	☐
	☐	☒	NRCA-LTI-05-A - Institutional Tuning Power Adjustment Factor (PAF)	☐	☐
Outdoor Lighting	☐	☒	NRCI-LTO-01-E - Must be submitted for all buildings	☐	☐
Sign Lighting	☐	☒	NRCA-LTO-02-A - Outdoor Lighting Controls	☐	☐
Covered Process	☐	☒	NRCA-PRC-01-F - Compressed Air Systems	☐	☐
	☐	☒	NRCA-PRC-02-F - Kitchen Exhaust	☐	☐
	☐	☒	NRCA-PRC-03-F - Garage Exhaust	☐	☐
	☐	☒	NRCA-PRC-04-F - Refrigerated Warehouse - Evaporator Fan Motor Controls	☐	☐
	☐	☒	NRCA-PRC-05-F - Refrigerated Warehouse - Evaporative Condenser Controls	☐	☐
	☐	☒	NRCA-PRC-06-F - Refrigerated Warehouse - Air Cooled Condenser Controls	☐	☐
	☐	☒	NRCA-PRC-07-F - Refrigerated Warehouse - Variable Speed Compressor	☐	☐
	☐	☒	NRCA-PRC-08-F - Electrical Resistance Underslab Heating System	☐	☐
	☐	☒	NRCA-PRC-15-F - Fume Hood Automatic Sash Closures System	☐	☐
	☐	☒	NRCA-PRC-16-A - Adiabatic Condensers	☐	☐

Project Name:	Lakeside Equestrian Concession Center	NRCC-PRF-01-E	Page 13 of 14
Project Address:	11055 Moreno Ave. Lakeside 92040	Calculation Date/Time:	13:19, Wed, Jan 22, 2020
Input File Name:	2020_05 - Lakeside Equestrian - T24.cibd19x		

Q. DECLARATION OF REQUIRED CERTIFICATES OF VERIFICATION

Table Instructions: Selections shall be made by Documentation Author to indicate which Certificates of Verification must be submitted for the features to be recognized for compliance. These documents must be retained and provided to the building inspector during construction and can be found online at: https://www.energy.ca.gov/title24/2019standards/2019_compliance_documents/Nonresidential_Documents/NRCV/

Building Component	YES	NO	Form/Title	Field Inspector Pass	Field Inspector Fail
Mechanical	☐	☒	NRCV-MCH-04-H Duct Leakage Test	☐	☐
	☐	☒	NRCV-MCH-24-H Enclosure Air Leakage	☐	☐
	☐	☒	NRCV-MCH-27 Indoor Air Quality & Mechanical Ventilation	☐	☐
	☐	☒	NRCV-MCH-32-H Local Mechanical Exhaust	☐	☐
Plumbing	☐	☒	NRCV-PLB-21-H - HERS verified central systems in high-rise residential, hotel/motel application	☐	☐
	☐	☒	NRCV-PLB-22-H - HERS verified single dwelling unit systems in high-rise residential, hotel/motel application	☐	☐

R. UNMET LOAD HOURS

This Section Does Not Apply

Project Name:	Lakeside Equestrian Concession Center	NRCC-PRF-01-E	Page 14 of 14
Project Address:	11055 Moreno Ave. Lakeside 92040	Calculation Date/Time:	13:19, Wed, Jan 22, 2020
Input File Name:	2020_05 - Lakeside Equestrian - T24.cibd19x		

DOCUMENTATION AUTHOR'S DECLARATION STATEMENT § 10-103

Documentation Author Name:	
Company: Vander Veen Engineering Consultants	Signature:
Address:	Signature Date: 2020-01-22
City/State/Zip:	CEA/ HERS Certification Identification (if applicable):
Phone:	

RESPONSIBLE PERSON'S DECLARATION STATEMENT

I certify the following under penalty of perjury, under the laws of the State of California:
1. The information provided on this Certificate of Compliance is true and correct.
2. I am eligible under Division 3 of the Business and Professions Code to accept responsibility for the building design or system design identified on this Certificate of Compliance (responsible designer)
3. The energy features and performance specifications, materials, components, and manufactured devices for the building design or system design identified on this Certificate of Compliance conform to the requirements of Title 24, Part 1 and Part 6 of the California Code of Regulations.
4. The building design or system design identified on this Certificate of Compliance are consistent with the information provided on other applicable compliance documents, worksheets, calculations, plans and specifications submitted to the enforcement agency for approval with this building permit application.
5. I will ensure that a completed signed copy of this Certificate of Compliance shall be made available with the building permit(s) issued for the building, and made available to the enforcement agency for all applicable inspections. I understand that a completed signed copy of this Certificate of Compliance is required to be included with the documentation the builder provides to the building owner at occupancy.

Responsible Envelope Designer Name: Warren + Scott Architec

GENERAL NOTES

1. ELECTRICAL INSTALLATION, MATERIALS, AND METHODS SHALL COMPLY WITH ALL APPLICABLE BUILDING CODES INCLUDING THE 2019 CALIFORNIA ELECTRICAL CODE (2017 NEC).
2. WIRING METHODS ARE INSULATED COPPER CONDUCTORS INSTALLED IN CONDUIT.
3. CONDUCTORS ARE COPPER WITH 90 DEGREE C THHN/THWN INSULATION
4. CIRCUIT BREAKERS SHALL BE FULLY RATED TO MEET OR EXCEED THE AIC RATINGS INDICATED.
5. MOTOR STARTERS AND FUSED SAFETY SWITCHES SHALL BE RATED FOR THE LOAD BEING SERVED. PROVIDE FUSE TYPE AND SIZE PER EQUIPMENT MANUFACTURER. CONTRACTOR SHALL VERIFY EQUIPMENT BRANCH CIRCUIT AND FUSE WIRING REQUIREMENTS PRIOR TO ROUGH-IN.
6. ALL PENETRATIONS THROUGH FIRE RATED WALLS SHALL BE PROTECTED FROM THE SPREAD OF FIRE WITH AN APPROVED FIRESTOP SYSTEM EQUAL OR GREATER THAN THE FIRE RATING OF THE WALL.
7. CONTRACTOR SHALL VERIFY ALL LOCATIONS, CONDITIONS, AND OBSTRUCTIONS PRIOR TO START OF CONSTRUCTION.
8. ELECTRICAL DRAWINGS ARE DIAGRAMMATIC AND ARE NOT INTENDED TO IDENTIFY THE EXACT PLACEMENT OF THE LIGHT FIXTURES AND OUTLETS. EXACT LOCATIONS OF ALL DEVICES INCLUDING MOUNTING HEIGHTS SHALL BE COORDINATED WITH ARCHITECTURAL DRAWINGS AND OWNER DURING CONSTRUCTION.
9. PROVIDE QUANTITY OF WIRES REQUIRED IN EACH WIRING SEGMENT FOR THE BRANCH CIRCUIT HOMERUNS AND INTERCONNECTING WIRING TO OUTLETS SHOWN ON DRAWINGS. COMMON NEUTRAL IS PERMITTED ONLY IN CASES ALLOWED BY CODE UNLESS NOTED OTHERWISE. PROVIDE BRANCH CIRCUIT WIRING AND CONDUIT SIZED PER CODE FOR ALL REQUIRED ELECTRICAL DEVICES AND EQUIPMENT SHOWN ON THE DRAWINGS. SIZE USE #12 AWG MINIMUM WIRE SIZE.
10. ALL POWER RECEPTACLES SHALL BE 20 AMP MINIMUM. DO NOT USE 15 AMP RECEPTACLE.
11. THE CONTRACTOR SHALL REFER TO COUNTY CONSTRUCTION STANDARDS. ALL WORK AND INSTALLED MATERIALS SHALL COMPLY WITH COUNTY CONSTRUCTION STANDARDS UNLESS SPECIFICALLY NOTED OTHERWISE.
12. THE CONTRACTOR SHALL REVIEW ALL DRAWINGS WITHIN THIS SET INCLUDING CIVIL, STRUCTURAL, ARCHITECTURAL, MECHANICAL, AND PLUMBING. SPECIFICATIONS FOR ELECTRICAL WORK NOTED ON OTHER DRAWINGS SHALL APPLY TO THE ELECTRICAL WORK
13. PROVIDE GREEN INSULATED EQUIPMENT GROUND CONDUCTOR IN ALL BRANCH CIRCUIT AND FEEDER RACEWAY. CONDUCTOR SHALL BE SIZE PER CEC ARTICLE 250.
14. IN CASES WHERE THERE ARE CONFLICTS BETWEEN THE DRAWINGS, SPECIFICATIONS, AND THE COUNTY STANDARDS, THE CONTRACTOR SHALL INCLUDE IN THE BID PRICE THE MOST RESTRICTIVE AND HIGHEST COST ALTERNATIVE. THE CONTRACTOR SHALL PREPARE AND SUBMIT TO THE COUNTY A REQUEST FOR INFORMATION (RFI) ASKING FOR CLARIFICATION OF THE CONFLICTING SPECIFICATION.
15. 2019 CALIFORNIA ENERGY CODE STANDARDS ARE APPLICABLE TO THIS PROJECT. THE REQUIREMENTS FOR INSTALLATION, TESTING, COMMISSIONING, AND FINAL VERIFICATION OF COMPLIANCE FOR LIGHTING AND CONTROL SYSTEMS ARE RESPONSIBILITY OF THE CONTRACTOR. THE CONTRACTOR IS RESPONSIBLE FOR ALL FIELD COMPLIANCE DOCUMENTATION, TESTING, AND COMMISSIONING TO MEET THE SATISFACTION OF THE INSPECTION AUTHORITY.
16. THE CONTRACTOR IS RESPONSIBLE FOR RECONCILIATION OF ALL SUBCONTRACTOR AND VENDOR EXCLUSIONS DURING BID SUCH THAT NO EXCLUSION OF MATERIALS OR LABOR BY ANY SUBCONTRACTOR OR VENDOR SHALL BE APPLICABLE TO THE CONTRACTOR'S BID FOR THE PROJECT UNLESS SUCH EXCLUSIONS ARE SPECIFICALLY ADDRESSED DURING BID AND ACCEPTED BY THE COUNTY.
17. THE ELECTRICAL SCOPE OF WORK APPLICABLE TO EACH SEPARATE BID ITEM AND EACH SEPARATE BUILDING STRUCTURE, ESPECIALLY IN THE CASE OF PRE-ENGINEERED OR PRE-PACKAGED BUILDINGS, SHALL BE COORDINATED AND CLEARLY DEFINED AS APPLICABLE.
18. BUILDING ELECTRICAL DRAWINGS SHOW ELECTRICAL OUTLETS, SWITCHES, LIGHTING, AND OTHER DEVICES AND EQUIPMENT FOR WHICH BRANCH CIRCUIT CONDUIT AND WIRE ARE REQUIRED. PROVIDE CONDUIT AND WIRE PER ELECTRICAL CODE TO SUPPLY AND CONTROL ALL SUCH ITEMS. EXACT ROUTING OF CONDUIT SHALL BE COORDINATED AND DETERMINED IN THE FIELD BY CONTRACTOR.
19. BUILDINGS ELECTRICAL INSTALLATION ONLY: ELECTRICAL METALLIC TUBING CONDUIT WITH COMPRESSION COUPLINGS AND CONNECTORS SHALL BE ACCEPTABLE FOR CONDUIT CONCEALED IN WALLS OR ABOVE CEILING WHERE NOT SUBJECT TO DAMAGE. EXPOSED CONDUIT INSTALLED BELOW 36" SHALL BE GALVANIZED RIGID STEEL PER SPECIFICATIONS.

ABBREVIATIONS

A	AMPERES
AC	ALTERNATING CURRENT
AF	AMPERE FRAME
AFC	ABOVE FINISHED CONCRETE
AFF	ABOVE FINISHED FLOOR
AFG	ABOVE FINISHED GRADE
AT	AMPERE TRIP
ATS	AUTOMATIC TRANSFER SWITCH
AUX	AUXILIARY
AUTO	AUTOMATIC
AWG	AMERICAN WIRE GAUGE
BC	BARE COPPER
BD	BOARD
BKR	BREAKER
C	CONDUIT
CB	CIRCUIT BREAKER
CKT	CIRCUIT
CLG	CEILING
C.O.	CONDUIT ONLY
COND	CONDUCTOR
CONT	CONTROL
CT	CURRENT TRANSFORMER
CU	COPPER
CR	CONTROL RELAY
DC	DIRECT CURRENT
DISC	DISCONNECT
DISC SW	DISCONNECT SWITCH
DPDT	DOUBLE POLE DOUBLE THROW
DPST	DOUBLE POLE SINGLE THROW
DWG	DRAWING
DS	DOOR SWITCH
EL,ELEV	ELEVATION
EMT	ELECTRICAL METALLIC TUBING
EO	ELECTRICALLY OPERATED
EXIST	EXISTING
FBO	FURNISHED BY OWNER
FDR	FEEDER
FIN	FINISHED
FLA	FULL LOAD AMPS
FLEX	FLEXIBLE
FM	FLOW METER
FS	FLOW SWITCH
FT OR '	FEET OR FOOT
FT	FLOW TRANSMITTER
FVNR	FULL VOLTAGE NON REVERSING
GALV	GALVANIZED
GD	GAS DETECTORS
GFI	GROUND FAULT INTERRUPTER
GFP	GROUND FAULT PROTECTION
GND OR G	GROUND
HH	HANDHOLE
HOA	HAND/OFF/AUTO
HTR	HEATER
IC	INTERRUPTING CURRENT
IN OR "	INCHES OR INCH
IND	INDICATING
INST	INSTANTANEOUS
INSTR	INSTRUMENT
INTLK	INTERLOCK
KW	KILOWATTS
LCL	LONG CONTINUOUS LOAD
LCP	LOCAL CONTROL PANEL
LEV	LEVEL
LIM	LIMIT
LR	LOCAL/REMOTE
LOS	LOCKOUT STOP STATION
LS	LEVEL OR LIMIT SWITCH
LSIG	LONG TIME, SHORT TIME, INSTANTANEOUS AND GROUND FAULT ADJUSTMENTS
LT	LIGHT
LTG	LIGHTING
LV	LOW VOLTAGE
MA	MILLIAMPERE
MAINT	MAINTAINED
MAN	MANUAL
MAX	MAXIMUM
MC	MAINTAINED CONTACT
MCC	MOTOR CONTROL CENTER
MCM	THOUSAND CIRCULAR MILS
MCP	MOTOR CIRCUIT PROTECTOR
MH	MANHOLE
MIN	MINIMUM OR MINUTE
MLO	MAIN LUGS ONLY
MSB	MAIN SWITCHBOARD
MTG	MOUNTING
MTR	MOTOR
N	NEUTRAL
NA	NON-AUTOMATIC
NC	NORMALLY CLOSED
NEC	NATIONAL ELECTRIC CODE
NIC	NOT IN CONTRACT
No	NUMBER
NO	NORMALLY OPEN
NOIC	NORMALLY OPEN, INSTANTANEOUS CLOSE
NOTC	NORMALLY OPEN, TIME CLOSE
NOTO	NORMALLY OPEN, TIME OPEN
NP	NAMEPLATE
NTS	NOT TO SCALE
OL	OVERLOAD
OTT	OVERTEMP SWITCH
PB	PUSHBUTTON
PB	PULLBOX
PC	PHOTOCELL
PCV	PUMP CONTROL VALVE
PMR	POWER MONITOR RELAY
PNL	PANEL
POS	POSITION
PR	PAIR
PRI	PRIMARY
PS	PRESSURE SWITCH
PT	POTENTIAL TRANSFORMER
PVC	POLYVINYL CHLORIDE
PVC/RGS	PVC JACKETED RIGID GALVANIZED STEEL CONDUIT
PW	PART WINDING
RECEP	RECEPTACLE
RCP	REMOTE CONTROL PANEL
RGS	RIGID GALVANIZED STEEL CONDUIT
RTU	REMOTE TERMINAL UNIT
RVAT	REDUCED VOLTAGE AUTO TRANSFORMER
RVYD	REDUCED VOLTAGE WYE DELTA
SCE	SOUTHERN CALIFORNIA EDISON
SEC	SECONDARY
SEL	SELECTOR
SP	SPARE
SPEC	SPECIFICATION
SPDT	SINGLE POLE DOUBLE THROW
SPST	SINGLE POLE SINGLE THROW
SS	STAINLESS STEEL
SSRV	SOLID STATE REDUCED VOLTAGE STARTER
ST	SHUNT TRIP
STA	STATION
STL	STEEL
STP	SHIELDED TWISTED PAIR
STR	STARTER
STT	SHIELDED TWISTED TRIPLET
SV	SOLENOID VALVE
SW	SWITCH
SWBD	SWITCHBOARD
TB	TERMINAL BOX
TEL	TELEPHONE
TEMP	TEMPERATURE
TERM	TERMINAL
TYP	TYPICAL
UG	UNDERGROUND
UON	UNLESS OTHERWISE NOTED
V	VOLTS
W	WATTS
WP	WEATHERPROOF
XFMR	TRANSFORMER
XP	EXPLOSION PROOF
3W	THREE WIRE
4W	FOUR WIRE

ELECTRICAL SYMBOLS LIST

SYMBOL	DESCRIPTION
$	LIGHT SWITCH, 20A, 120V, SURFACE OR WALL MOUNTED +48"AFF
$D	ELECTRONIC DIMMER SWITCH, RATED FOR CONNECTED LOAD, SURFACE OR WALL MOUNTED +48" AFF
$OS	OCCUPANCY SENSOR, INFRARED TYPE, SURFACE OR WALL MOUNTED +48" AFF
	SIGN FLOODLIGHT
OS	OCCUPANCY SENSOR, ULTRASONIC TYPE WITH LOAD RELAY AS APPLICABLE. CEILING MOUNTED.
	POLE LIGHT FIXTURE, TYPE AS SPECIFIED
	CEILING SURFACE OR PENDANT LINEAR LIGHT FIXTURE, TYPE AS SPECIFIED
	LIGHT FIXTURE WITH 90 MINUTE BATTERY BACKUP RATED FOR EMERGENCY USE.
	RECESSED 2 X 4 LIGHT FIXTURE, TYPE AS SPECIFIED
	EXTERIOR WALL MOUNTED LIGHT FIXTURE, TYPE AS SPECIFIED
	EXTERIOR WALL PACK LIGHT FIXTURE, TYPE AS SPECIFIED
	CEILING SURFACE OR PENDANT LINEAR LIGHT FIXTURE, TYPE AS SPECIFIED
A	LIGHT FIXTURE TYPE DESIGNATOR
1	REFERENCE NOTE DESIGNATOR
	DUPLEX RECEPTACLE, 20A, 120V, WALL OR SURFACE MOUNTED +18" AFF
GFI WP	DUPLEX RECEPTACLE, 20A, 120V, WALL OR CONDUIT MOUNTED +18" AFF IN-USE WEATHERPROOF COVER AND GROUND FAULT INTERRUPTER
	SINGLE RECEPTACLE, TYPE AND RATING AS DESIGNATED ON PLAN OR SCHEDULE, WALL OR SURFACE MOUNTED + 18" AFF
J	JUNCTION BOX
JMV	JUNCTION BOX WITH FLEXIBLE CONDUIT CONNECTION TO EQUIPMENT
	POWER PANELBOARD
	CONTROL STATION OR CONTROL PANEL
	CONDUIT MOUNTED ABOVE GRADE CONCEALED OR EXPOSED ON WALL OR CEILING. CONDUIT AND CIRCUIT WIRING SIZES AS REQUIRED FOR RESPECTIVE CIRCUIT OR AS NOTED. MINIMUM CONDUIT SIZE 1/2", MINIMUM WIRE SIZE #12AWG.
	CONDUIT INSTALLED UNDERGROUND. CONDUIT AND CIRCUIT WIRING SIZES AS REQUIRED FOR RESPECTIVE CIRCUIT OR AS NOTED. MINIMUM CONDUIT SIZE 1", MINIMUM WIRE SIZE #10AWG.
A-2 #10	HOMERUN CONDUIT. "A-2" INDICATES PANEL AND CIRCUIT NUMBER. "#10" INDICATES WIRE SIZE FOR HOMERUN WIRE AND ALL DOWNSTREAM WIRES FOR THE ENTIRE BRANCH CIRCUIT.
	MOTOR
F	FUSIBLE DISCONNECT SWITCH
M	UTILITY METER
	CONDUIT STUB
	FUSED SWITCH
	CIRCUIT BREAKER

E1.0.0

REGISTERED PROFESSIONAL ENGINEER — FRANCO V. GRECO — No. E13691 — Exp. 6/30/20 — ELECTRICAL — STATE OF CALIFORNIA

MPA
MORAES/PHAM & ASSOCIATES
2131 Palomar Airport Rd. #120
Carlsbad, CA 92011

REGISTERED ENGINEER _____ DATE _____

DEPARTMENT OF PARKS AND RECREATION
COUNTY OF SAN DIEGO
5500 OVERLAND DRIVE, SUITE 410 SAN DIEGO, CALIFORNIA 92123

COUNTY OF SAN DIEGO PARKS AND RECREATION

NO.	REVISIONS	APPR.	DATE

DESIGNED BY: GG
DRAWN BY: CADD
CHECKED BY: GG
PROJECT MANAGER: XX

LAKESIDE EQUESTRIAN FACILITY

STANDARD ELECTRICAL SYMBOLS AND ABBREVIATIONS

SCALE: AS SHOWN
PROJ. NO. 1020367
FILE NO.
SHEET 31 OF 68

Z:\Lakeside Equestrian Facility\ELECTRICAL\BLDG-E1.0.0.DWG Wednesday, Feb. 05 2020 12:58pm gerry

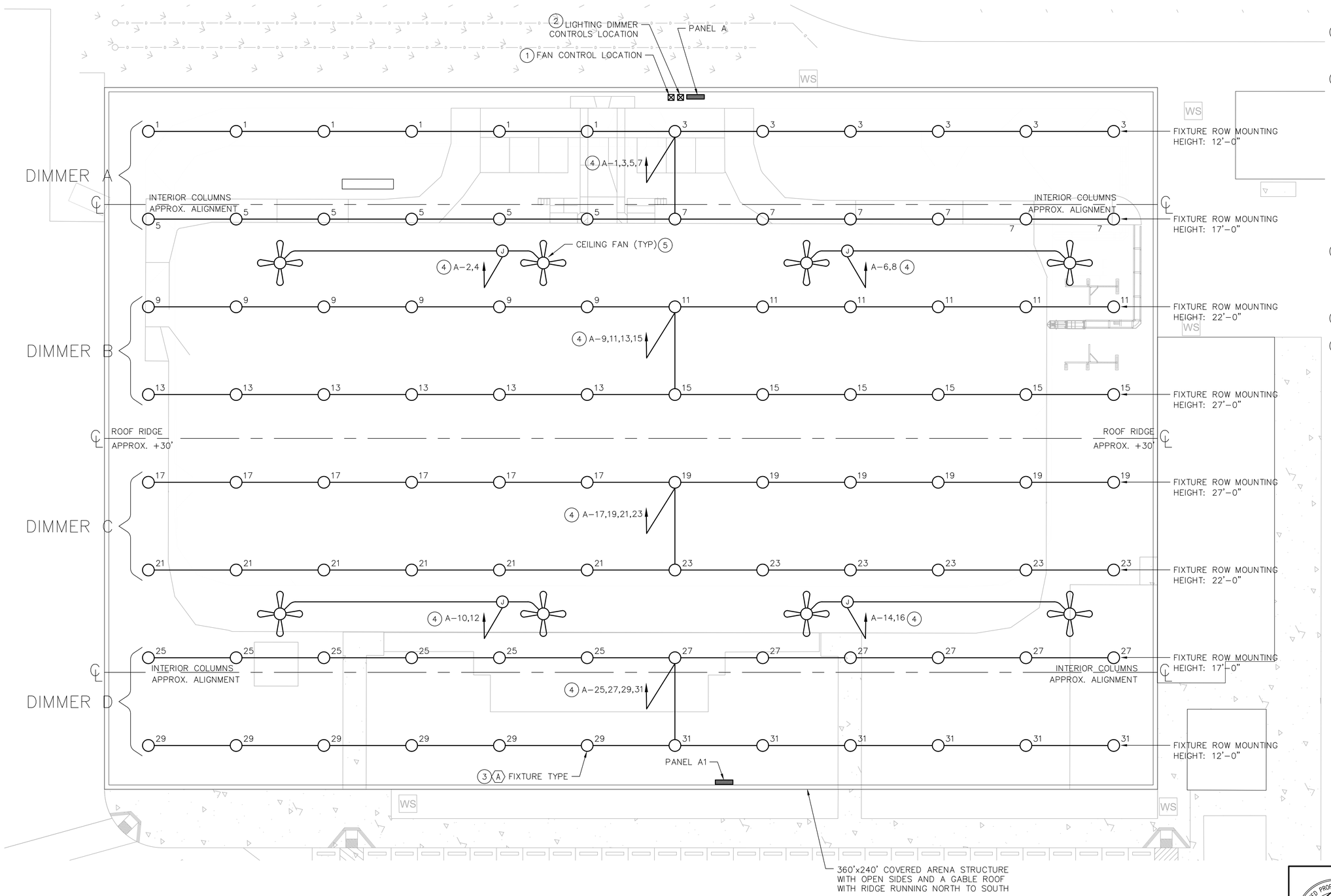

NOTES:

1. PROVIDE A FAN SPEED CONTROL SYSTEM IN A NEMA 3R ENCLOSURE FOR VARIABLE SPEED CONTROL OF EACH PAIR OF FANS WITH CAPABILITY TO LINK ALL FANS TO SAME SPEED.
2. PROVIDE A PROGRAMMABLE DIMMING CONTROL SYSTEM WITH ASTRONOMICAL TIME CLOCK AND 0-10VDC DIMMING CONTROLS FOR DIMMING OF COVERED ARENA LIGHTING. SYSTEM SHALL BE COMPLETE AND INCLUDE CIRCUIT BREAKERS, LED DIMMING MODULES, SWITCHING MODULES, PROCESSOR AND SOFTWARE, AND ALL OTHER REQUIRED COMPONENTS AND ACCESSORIES FOR A COMPLETE SYSTEM. ENCLOSURE SHALL BE NEMA 3R. PROVIDE SEPARATE DIMMING CIRCUITS FOR LIGHTS AS NOTED WITH CAPABILITY OF LINKING ALL LIGHTS TO SAME LIGHT LEVEL AND A MINUMUM OF FOUR PRESET SCENES. WIRING AND CONDUIT INTERCONNECTIONS FROM DIMMING SYSTEM TO LIGHT FIXTURES SHALL BE PROVIDED. COORDINATE LIGHT FIXTURE SUPPLY REQUIREMENTS FOR FULL COMPATIBILITY.
3. COORDINATE EXACT MOUNTING HEIGHTS OF LIGHTS WITH FIELD CONDITIONS. MOUNTING HEIGHTS NOTED ARE APPROX. BASED ON A 360'x240' OPEN SIDE STRUCTURE WITH A GABLE ROOF WITH RIDGE LINE LOCATION AS SHOWN.
4. USE #10AWG CONDUCTORS THROUGHOUT CIRCUIT.
5. CEILING FANS ARE BASED ON HUNTER TITAN 14. 5AMPS, 208V.

REFER TO CIVIL DRAWINGS FOR ELECTRICAL SITE PLAN, SINGLE LINE DIAGRAM, CONDUIT SCHEDULE, PANEL SCHEDULES AND LIGHT FIXTURE SCHEDULE.

GRAPHIC SCALE (FEET)
0 16 32 48

COVERED ARENA LIGHTING PLAN
SCALE: 1/16" = 1'-0"

E1.0.1

REGISTERED PROFESSIONAL ENGINEER — CHRISTOPHER J. GREEN — NO. E13691 — EXP. 6/30/20 — ELECTRICAL — STATE OF CALIFORNIA

MPA
MORAES / PHAM & ASSOCIATES
2131 Palomar Airport Rd. #120
Carlsbad, CA 92011

REGISTERED ENGINEER _____ DATE _____

DEPARTMENT OF PARKS AND RECREATION
COUNTY OF SAN DIEGO
5500 OVERLAND DRIVE, SUITE 410 SAN DIEGO, CALIFORNIA 92123

COUNTY OF SAN DIEGO PARKS AND RECREATION

NO.	REVISIONS	APPR.	DATE

DESIGNED BY: GG
DRAWN BY: CADD
CHECKED BY: GG
PROJECT MANAGER: XX

LAKESIDE EQUESTRIAN FACILITY
COVERED ARENA LIGHTING PLAN

SCALE: AS SHOWN
PROJ. NO. 1020367
FILE NO.
SHEET 32 OF 68

Z:\Lakeside Equestrian Facility\ELECTRICAL\BLDG-E1.0.1.DWG Wednesday, Feb. 05 2020 11:41am gerry

NOTES:

1. VERIFY EXACT LOCATION FOR STUB-UP.
2. STUB-UP AND CAP AT STRUCTURAL COLUMN FOR FUTURE USE.

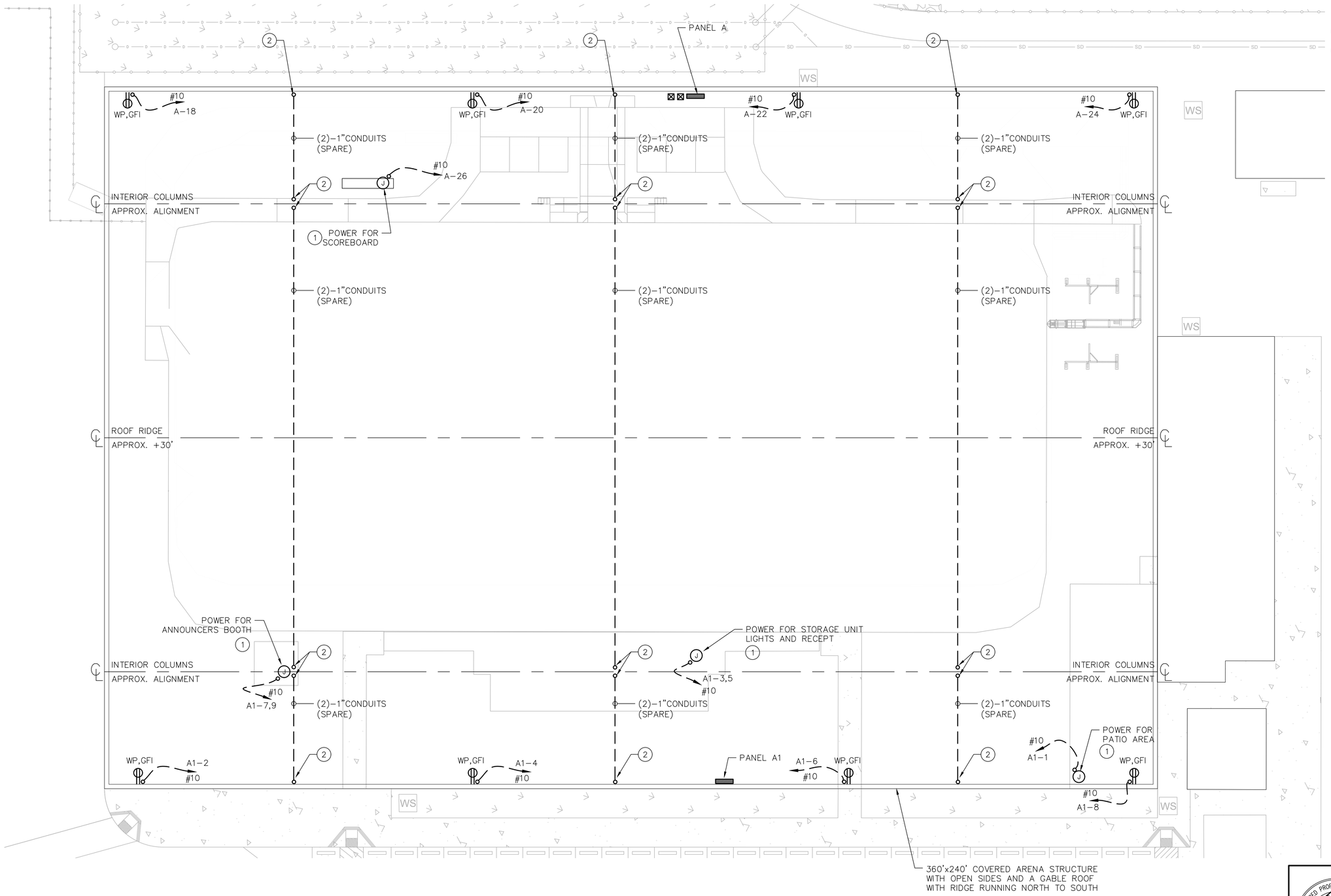

REFER TO CIVIL DRAWINGS FOR ELECTRICAL SITE PLAN, SINGLE LINE DIAGRAM, CONDUIT SCHEDULE, PANEL SCHEDULES AND LIGHT FIXTURE SCHEDULE.

GRAPHIC SCALE (FEET)

0 16 32 48

E1.0.2

COVERED ARENA POWER PLAN

SCALE: 1/16" = 1'-0"

REGISTERED PROFESSIONAL ENGINEER
GERALD V. GREEN
No. E15691
Exp. 6/30/20
ELECTRICAL
STATE OF CALIFORNIA

MPA
MORAES/PHAM & ASSOCIATES
2131 Palomar Airport Rd. #120
Carlsbad, CA 92011

REGISTERED ENGINEER DATE

DEPARTMENT OF PARKS AND RECREATION
COUNTY OF SAN DIEGO
5500 OVERLAND DRIVE, SUITE 410 SAN DIEGO, CALIFORNIA 92123

COUNTY OF SAN DIEGO PARKS AND RECREATION

NO.	REVISIONS	APPR.	DATE

DESIGNED BY: GG
DRAWN BY: CADD
CHECKED BY: GG
PROJECT MANAGER: XX

LAKESIDE EQUESTRIAN FACILITY
COVERED ARENA POWER PLAN

SCALE: AS SHOWN
PROJ. NO. 1020367
FILE NO.
SHEET 33 OF 68

Z:\Lakeside Equestrian Facility\ELECTRICAL\BLDG-E1.0.2.DWG Wednesday, Feb. 05 2020 11:44am gerry

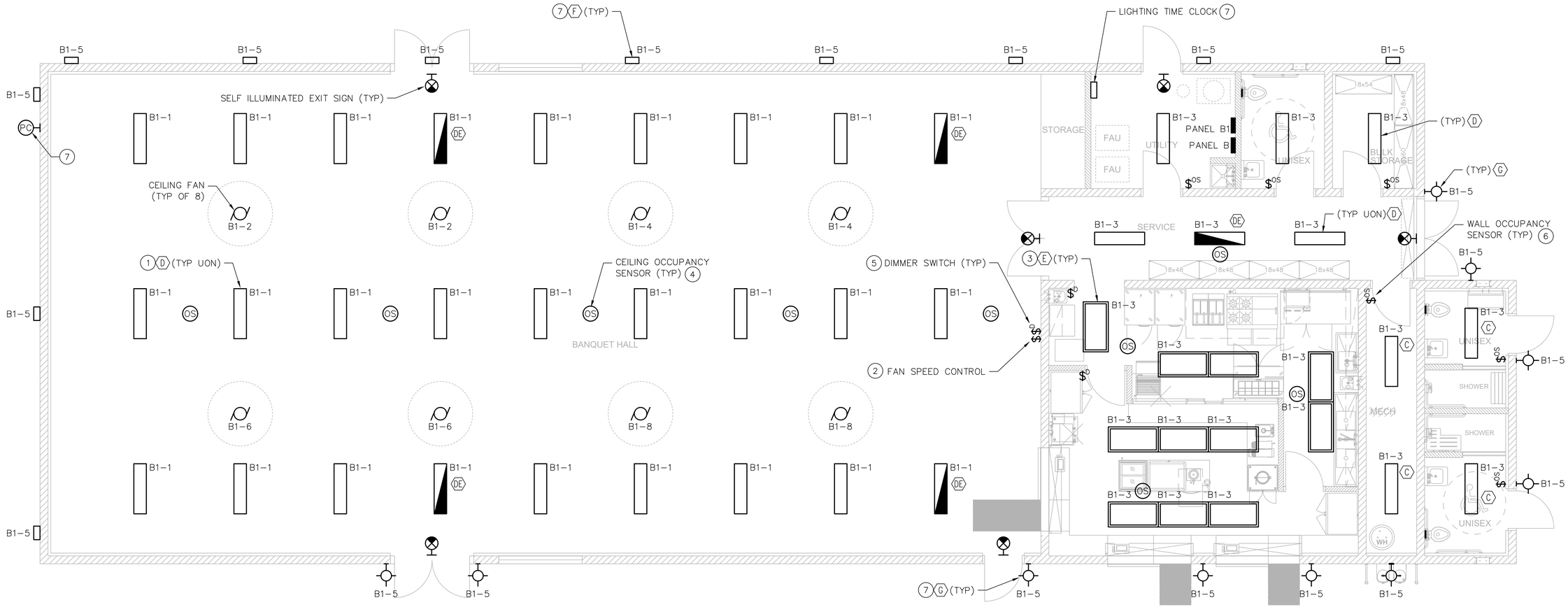

MEETING ROOM / KITCHEN LIGHTING PLAN

SCALE: 1/4" = 1'-0"

NOTES:

1. PENDANT STEM MOUNTED FIXTURE AT APPROX. 10'-0"
2. PROVIDE FAN SPEED CONTROLLER FOR COMMON SPEED FOR ALL FANS.
3. PROVIDE SEPARATE SUPPORT WIRES FROM STRUCTURE ABOVE FOR SUPPORT OF LAY-IN FIXTURE AT (2) POINT.
4. PROVIDE SINGLE OR MULTIPLE CEILING MOUNTED ULTRASONIC OCCUPANCY SENSORS AS REQUIRED TO CONTROL ALL LIGHTS IN EACH SPACE.
5. PROVIDE LIGHTING DIMMER CONTROLS FOR 0-10V DIMMING OF ALL LIGHTS IN EACH SPACE.
6. PROVIDE WALL INFRARED OCCUPANCY SENSOR FOR LIGHTING CONTROL
7. PROVIDE TIME CLOCK AND PHOTOCELL CONTROLS FOR EXTERIOR LIGHTING. SEPARATE CHANNELS FOR WALL PACKS AND DOOR LIGHTS.

N

GRAPHIC SCALE (FEET)

0 4 8 12

E1.1.1

FINAL BUILDING SHOP DRAWINGS TO INCLUDE SKYLIGHTS THROUGHOUT MEETING ROOM BUILDING. LIGHTING SHALL BE COORDINATED WITH SKYLIGHTS

REFER TO CIVIL DRAWINGS FOR ELECTRICAL SITE PLAN, SINGLE LINE DIAGRAM, CONDUIT SCHEDULE, PANEL SCHEDULES AND LIGHT FIXTURE SCHEDULE.

REGISTERED PROFESSIONAL ENGINEER GERALD L. GREEN No. E15691 Exp. 6/30/20 ELECTRICAL STATE OF CALIFORNIA

MPA
MORAES / PHAM & ASSOCIATES
2131 Palomar Airport Rd. #120
Carlsbad, CA 92011

REGISTERED ENGINEER DATE

DEPARTMENT OF PARKS AND RECREATION
COUNTY OF SAN DIEGO
5500 OVERLAND DRIVE, SUITE 410 SAN DIEGO, CALIFORNIA 92123

COUNTY OF SAN DIEGO PARKS AND RECREATION

NO.	REVISIONS	APPR.	DATE

DESIGNED BY: GG
DRAWN BY: CADD
CHECKED BY: GG
PROJECT MANAGER: XX

LAKESIDE EQUESTRIAN FACILITY
MEETING ROOM / KITCHEN LIGHTING PLAN

SCALE: AS SHOWN
PROJ. NO. 1020367
FILE NO.
SHEET 34 OF 68

Z:\Lakeside Equestrian Facility\ELECTRICAL\BLDG-E1.1.1.DWG Wednesday, Feb. 05 2020 11:47am gerry

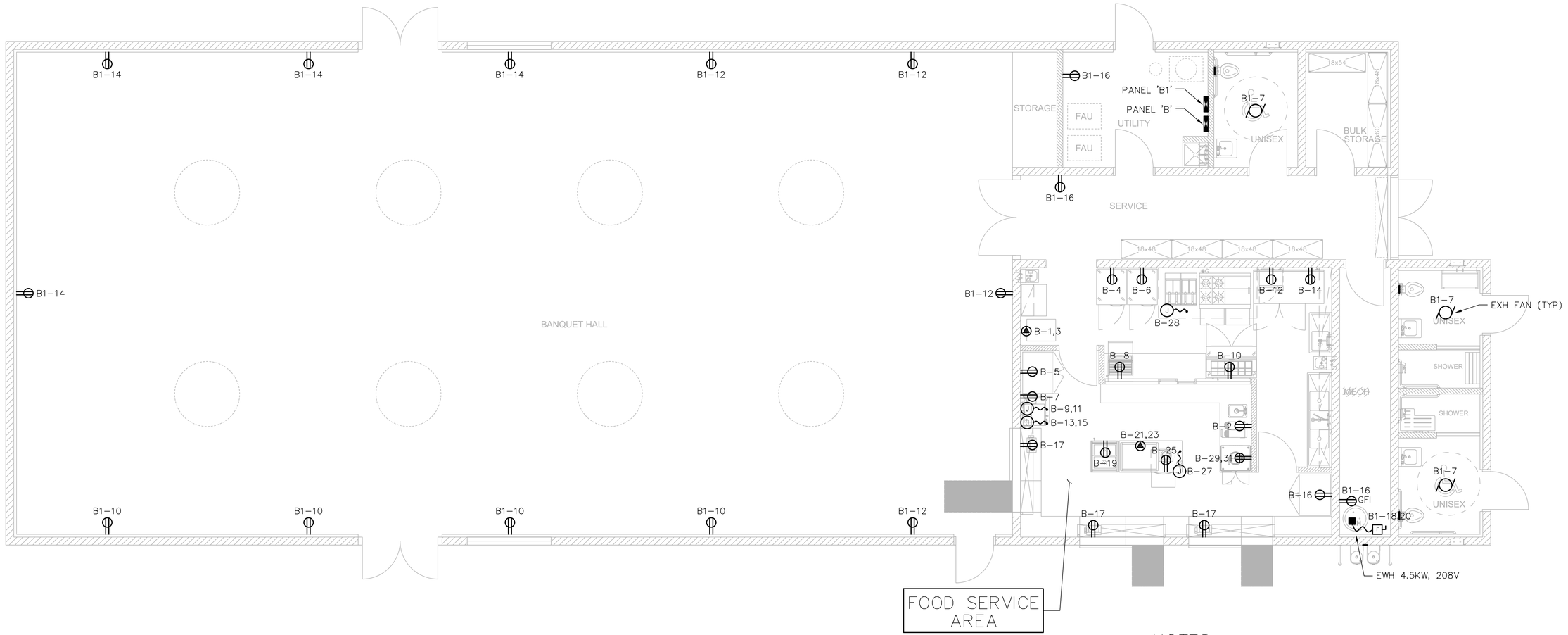

MEETING ROOM / KITCHEN POWER PLAN

SCALE: 1/4" = 1'–0"

NOTES:

1. REFER TO FOOD SERVICE DRAWINGS FOR EQUIPMENT SCHEDULE AND ELECTRICAL SUPPLY REQUIREMENTS FOR ALL EQUIPMENT IN FOOD SERVICE AREA.
2. PROVIDE ELECTRICAL TO ALL FOOD SERVICE EQUIPMENT PER FOOD SERVICE DRAWINGS.
3. PROVIDE ELECTRICAL SERVICE TO FOOD SERVICE HOOD INCLUDING FANS, LIGHTS AND INTERLOCK CONTROLS.

N

GRAPHIC SCALE (FEET)

0 4 8 12

REFER TO CIVIL DRAWINGS FOR ELECTRICAL SITE PLAN, SINGLE LINE DIAGRAM, CONDUIT SCHEDULE, PANEL SCHEDULES AND LIGHT FIXTURE SCHEDULE.

E1.1.2

REGISTERED PROFESSIONAL ENGINEER — CHRISTOPHER J. GREEN — NO. E15691 — EXP. 6/30/20 — ELECTRICAL — STATE OF CALIFORNIA

MPA
MORAES / PHAM & ASSOCIATES
2131 Palomar Airport Rd. #120
Carlsbad, CA 92011

REGISTERED ENGINEER DATE

DEPARTMENT OF PARKS AND RECREATION
COUNTY OF SAN DIEGO
5500 OVERLAND DRIVE, SUITE 410 SAN DIEGO, CALIFORNIA 92123

COUNTY OF SAN DIEGO PARKS AND RECREATION

NO.	REVISIONS	APPR.	DATE

DESIGNED BY: GG
DRAWN BY: CADD
CHECKED BY: GG
PROJECT MANAGER: XX

LAKESIDE EQUESTRIAN FACILITY
MEETING ROOM / KITCHEN POWER PLAN

SCALE: AS SHOWN
PROJ. NO. 1020367
FILE NO.
SHEET 35 OF 68

Z:\Lakeside Equestrian Facility\ELECTRICAL\BLDG\E1.1.2.DWG Wednesday, Feb. 05 2020 12:35pm gerry

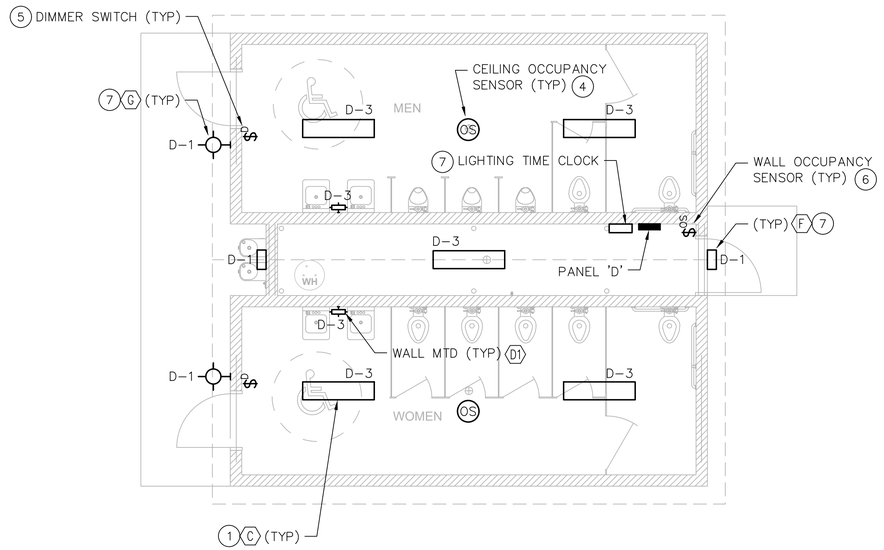

RESTROOMS LIGHTING PLAN

SCALE: 1/4" = 1'-0"

NOTES:

1. PENDANT STEM MOUNTED FIXTURE AT APPROX. 10'-0"
2. NOTE NOT USED.
3. NOTE NOT USED.
4. PROVIDE SINGLE OR MULTIPLE CEILING OCCUPANCY SENSORS AS REQUIRED TO CONTROL ALL LIGHTS IN EACH SPACE.
5. PROVIDE LIGHTING DIMMER CONTROLS FOR 0-10V DIMMING OF ALL LIGHTS IN EACH SPACE.
6. PROVIDE WALL INFRARED OCCUPANCY SENSOR FOR LIGHTING CONTROL
7. PROVIDE TIME CLOCK AND PHOTOCELL CONTROLS FOR EXTERIOR LIGHTING. SEPARATE CHANNELS FOR WALL PACKS AND DOOR LIGHTS.

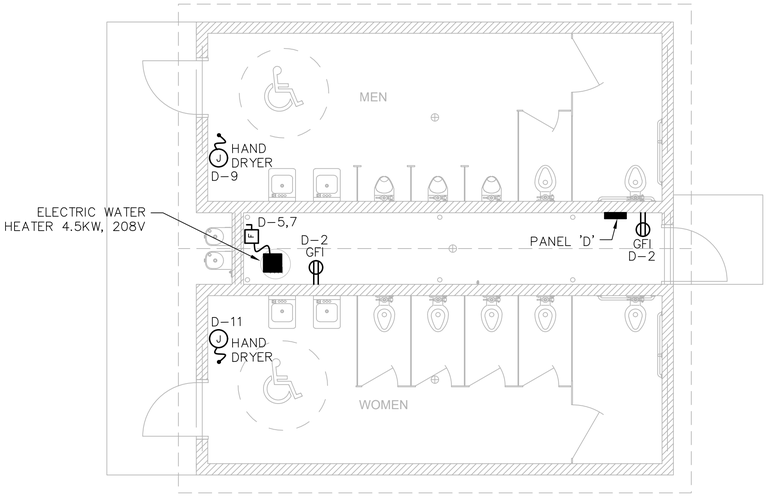

RESTROOMS POWER PLAN

SCALE: 1/4" = 1'-0"

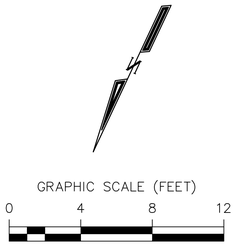

E1.2.1

REFER TO CIVIL DRAWINGS FOR ELECTRICAL SITE PLAN, SINGLE LINE DIAGRAM, CONDUIT SCHEDULE, PANEL SCHEDULES AND LIGHT FIXTURE SCHEDULE.

REGISTERED PROFESSIONAL ENGINEER GERALD L. GREEN No. E15691 Exp. 6/30/20 ELECTRICAL STATE OF CALIFORNIA

MPA
MORAES / PHAM & ASSOCIATES
2131 Palomar Airport Rd. #120
Carlsbad, CA 92011

REGISTERED ENGINEER DATE

DEPARTMENT OF PARKS AND RECREATION
COUNTY OF SAN DIEGO
5500 OVERLAND DRIVE, SUITE 410 SAN DIEGO, CALIFORNIA 92123

COUNTY OF SAN DIEGO PARKS AND RECREATION

NO.	REVISIONS	APPR.	DATE

DESIGNED BY: GG
DRAWN BY: CADD
CHECKED BY: GG
PROJECT MANAGER: XX

LAKESIDE EQUESTRIAN FACILITY
RESTROOMS POWER AND LIGHTING PLANS

SCALE: AS SHOWN
PROJ. NO. 1020367
FILE NO.
SHEET 36 OF 68

Z:\Lakeside Equestrian Facility\ELECTRICAL\BLDG-E1.2.1.DWG Wednesday, Feb. 05 2020 11:50am gerry

CIRCUITS SHOWN ARE BASED ON OUTSIDE ARENA ANNOUNCERS BOOTH. COVERED ARENA CIRCUITS ARE A1–7,9

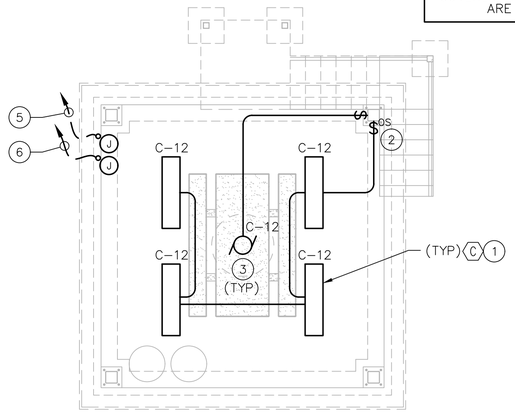

ANNOUNCERS BOOTH 1ST FLOOR ELECTRICAL PLAN

SCALE: 1/4" = 1'–0"

NOTES:

1. PENDANT MOUNTED LIGHT FIXTURE AT +8'–0". COORDINATE WITH STRUCTURE AND CEILING FAN.
2. WALL OCCUPANCY SENSOR.
3. CEILING FAN.
4. 20A RECEPTACLE FOR SCORING COMPUTER SYSTEM.
5. (2)20A, 120V CIRCUITS. SEE E–2 SITE ELECTRICAL PLAN. SEPARATE CIRCUIT FOR RECEPTACLES/FANS AND FOR LIGHTS.
6. (2)1"C.O. TO SCOREBOARD. SEE E–2 SITE ELECTRICAL PLAN.

CIRCUITS SHOWN ARE BASED ON OUTSIDE ARENA ANNOUNCERS BOOTH. COVERED ARENA CIRCUITS ARE A1–7,9

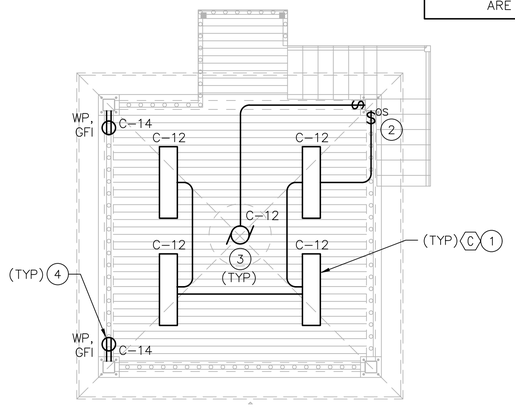

ANNOUNCERS BOOTH 2ND FLOOR ELECTRICAL PLAN

SCALE: 1/4" = 1'–0"

GRAPHIC SCALE (FEET)

0 4 8 12

REFER TO CIVIL DRAWINGS FOR ELECTRICAL SITE PLAN, SINGLE LINE DIAGRAM, CONDUIT SCHEDULE, PANEL SCHEDULES AND LIGHT FIXTURE SCHEDULE.

E1.4.1

REGISTERED PROFESSIONAL ENGINEER — GEORGE V. GREEN — No. E13691 — Exp. 6/30/20 — ELECTRICAL — STATE OF CALIFORNIA

MPA
MORAES / PHAM & ASSOCIATES
2131 Palomar Airport Rd. #120
Carlsbad, CA 92011

REGISTERED ENGINEER ____ DATE ____

DEPARTMENT OF PARKS AND RECREATION
COUNTY OF SAN DIEGO
5500 OVERLAND DRIVE, SUITE 410 SAN DIEGO, CALIFORNIA 92123

COUNTY OF SAN DIEGO PARKS AND RECREATION

NO.	REVISIONS	APPR.	DATE

DESIGNED BY: GG
DRAWN BY: CADD
CHECKED BY: GG
PROJECT MANAGER: XX

LAKESIDE EQUESTRIAN FACILITY

ANNOUNCERS BOOTH ELECTRICAL PLANS

SCALE: AS SHOWN
PROJ. NO. 1020367
FILE NO.
SHEET 37 OF 68

Z:\Lakeside Equestrian Facility\ELECTRICAL\BLDG-E1.4.1.DWG Wednesday, Feb. 05 2020 12:07pm gerry

-1 0 1 2 3 4 5 6 7 8 9 10

FOR REDUCED PLANS
ORIGINAL SCALE IS IN INCHES

ISSUE FOR BID - 2/03/2020 NOT FOR CONSTRUCTION

GENERAL NOTES

1. ALL WORK AND MATERIAL SHALL BE IN COMPLIANCE WITH AND PERFORMED AND INSTALLED INCOMFORMANCE WITH THE FOLLOWING CODES AS ADOPTED AND AMENDED BY THE INSPECTING AUTHORITY. NOTHING IN THESE DRAWINGS IS TO BE CONSTRUED TO PERMIT WORK NOT CONFORMING TO THESE CODES OR OTHERS APPLICABLE TO THIS PROJECT:
BUILDING STANDARDS ADMINISTRATIVE CODE, PART 1, TITLE 24 C.C.R. 2016 CALIFORNIA BUILDING CODE (CBC), PART 2, TITLE 24 C.C.R. 2016 CALIFORNIA ELECTRICAL CODE (CEC), PART 3, TITLE 24 C.C.R. 2016 CALIFORNIA MECHANICAL CODE (CMC), PART 4, TITLE 24 C.C.R. 2016 CALIFORNIA PLUMBING CODE (CPC), PART 5, TITLE 24 C.C.R. 2016 CALIFORNIA ENERGY CODE, PART 6, TITLE 24 C.C.R. 2016 CALIFORNIA FIRE CODE (CFC), PART 9, TITLE 24 C.C.R., 2016 CALIFORNIA REFERENCED STANDARDS, PART 12, TITLE 24 C.C.R. 2016 TITLE 19, CCR, PUBLIC SAFETY, STATE FIRE MARSHAL REGULATIONS 2013 NFPA 13 - AUTOMATIC SPRINKLER SYSTEMS
2. THE ARCHITECTURAL DESIGN DRAWINGS SHALL INDICATE ALL ACCESSIBLE FIXTURE LOCATIONS AND MOUNTING HEIGHTS. FURNISH ALL EXPOSED HOT WATER AND DRAIN PIPING BELOW ACCESSIBLE LAVATORIES AND SINKS WITH INSULATION. ALL WATER CLOSET FLUSHING LEVERS SHALL BE TO THE WIDE SIDE OF THE STALL.
3. TRAPS FOR ALL LAVATORIES AND SINKS SHALL TRAP STRAIGHT BACK TO WALL WITH ALL REQUIRED OFFSETS HAPPENING WITHIN THE WALL.
4. ALL PLUMBING WORK SHALL BE INSTALLED TO AVOID INTERFERENCE WITH ELECTRICAL AND MECHANICAL EQUIPMENT AND STRUCTURAL FRAMING.
5. ALL CLEANOUTS SHALL BE INSTALLED WHERE EASILY ACCESSIBLE. THE CONTRACTOR SHALL COORDINATE ALL CLEANOUT LOCATIONS WITH ALL EQUIPMENT, CABINETS AND OTHER OBSTRUCTION PRIOR TO ANY INSTALLATION. CLEANOUTS MUST BE EXTENDED TO FLUSH WITH FINISHED WALL.
6. ALL PLUMBING FIXTURE VENTS SHALL TERMINATE A MINIMUM OF 12 INCHES FROM ANY VERTICAL SURFACE AND 10 FEET FROM ANY OUTSIDE AIR INTAKES.
7. ALL VALVES, UNIONS, ETC. TO BE SAME SIZE AS PIPE UNLESS OTHERWISE INDICATED ON PLANS.
8. UNIONS SHALL BE PROVIDED AND INSTALLED AFTER EACH VALVE AND PRIOR TO ALL EQUIPMENT CONNECTIONS.
9. THE ARCHITECTURAL DESIGN DRAWINGS SHALL INDICATE THE EXACT LOCATIONS AND MOUNTING HEIGHTS OF ALL PLUMBING FIXTURES.
10. BEFORE FABRICATION OR INSTALLATION THE CONTRACTOR SHALL VERIFY EXACT LOCATIONS OF ALL MECHANICAL EQUIPMENT AND EQUIPMENT PROVIDED UNDER OTHER SECTIONS OF SPECIFICATIONS. ROUGH-IN LOCATIONS AND REQUIREMENTS SHALL BE COORDINATED IN THE FIELD.
11. ALL SEWER AND VENT PIPING LESS THAN 4" SHALL SLOPE AT 2%. 4" AND LARGER SHALL SLOPE AT 1%.
12. ALL VALVES, TRAP PRIMERS, WATER HAMMER ARRESTERS OR OTHER EQUIPMENT LOCATED IN WALLS OR ABOVE NON-ACCESSIBLE CEILINGS SHALL BE INSTALLED BEHIND AN ACCESS PANEL. ALL PIPING & DEVICES SHALL BE INSTALLED ABOVE CEILING, WITHIN WALLS, BELOW FLOORS, OR OTHERWISE CONCEALED. EXCEPT PIPING AND DEVICES INSTALLED IN MECHANICAL ROOMS AND OTHER UNFINISHED SPACES.
13. ALL PLUMBING FIXTURES AND EQUIPMENT SHALL BE CERTIFIED BY THE CALIFORNIA STATE ENERGY COMMISSION TO COMPLY WITH EFFICIENCY STANDARDS PER SECTION 110 OF THE TITLE-24 REGULATIONS.
14. ALL HOT WATER SUPPLY & RETURN PIPING SHALL BE INSULATED. INSULATION SHALL HAVE A FLAME SPREAD OF NOT MORE THAN 25 AND A SMOKE DENSITY NOT EXCEEDING 50 PER CMC SEC. 12.1.2.1.8 SEE SPECIFICATION FOR OTHER REQUIREMENTS.
15. PIPING THROUGH FIRE RATED WALLS SHALL BE PROTECTED PER U.L. FIRE RESISTANCE SYSTEM NO. WL1001. THE ARCHITECTURAL DESIGN DRAWINGS SHALL INDICATE ALL RATED WALL LOCATIONS.
16. SEISMIC BRACING AND ANCHORAGE REQUIREMENTS ARE AS FOLLOWS:
A. HE SEISMIC ANCHORAGE FOR ALL MECHANICAL AND ELECTRICAL EQUIPMENT SHALL BE DESIGNED TO WITHSTAND A LATERAL FORCE.
1. CALCULATED AS SPECIFIED IN SECTION 1632A AND TABLE 16A-0 OF THE VOL. 2, TITLE 24, 2016 CBC.
A LATERAL FORCE:
B. THE ATTACHMENT OF THE FOLLOWING ITEMS SHALL BE DESIGNED TO RESIST THE FORCES PRESCRIBED IN PART 2, TITLE 24, 2016 CBC:
1. EQUIPMENT WEIGHING LESS THAN 400 LBS. SUPPORTED DIRECTLY ON FLOOR OR ROOF.
2. FURNITURE REQUIRED TO BE ATTACHED IN ACCORDANCE WITH PART 2, TITLE 24, C.C.R..
3. TEMPORARY OR MOBILE EQUIPMENT.
4. EQUIPMENT WEIGHING LESS THAN 20 LBS. SUPPORTED BY VIBRATION ISOLATORS.
5. EQUIPMENT WEIGHING LESS THAN 20 LBS. SUSPENDED FROM A ROOF OR HUNG FROM A WALL.
17. THE PLUMBING CONTRACTOR SHALL PROVIDE THE WATER & SEWER SYSTEMS TO A POINT OF CONNECTION 5'-0" OUTSIDE OF THE BUILDING. PIPING BEYOND THIS POINT IS SPECIFIED UNDER ANOTHER SECTION OF THE SPECIFICATIONS AND SHALL BE AS SHOWN ON THE CIVIL DRAWINGS. FINAL CONNECTIONS TO SITE PIPING SHALL BE BY THE PLUMBING CONTRACTOR.
18. WATER HAMMER ARRESTERS SHALL BE PROVIDED WHERE REQUIRED AND NECESSARY FOR AND TO ALL FIXTURES, EQUIPMENT OR APPLIANCES WITH QUICK CLOSING VALVE AND SHALL BE OF TYPE SPECIFIED.
19. ALL PIPE SIZES SHALL BE THE SAME AS THE UPSTREAM PIPE SIZES UNLESS OTHERWISE INDICATED ON PLAN.
20. CLEAN OUT SHALL BE PROVIDED AS PER CALIFORNIA PLUMBING CODE SECTION 707.
21. NO STRUCTURAL MEMBER SHALL BE CUT, NEITHER DRILLED NOR NOTCHED WITHOUT PRIOR WRITTEN AUTHORIZATION FROM THE STRUCTURAL ENGINEER.
22. THESE DRAWINGS ARE ESSENTIALLY DIAGRAMMATIC AND ARE NOT INTENDED TO INDICATE ALL DETAILS AND NECESSARY OFFSETS OF PIPING. THE CONTRACTOR SHALL INSTALL MATERIAL AND EQUIPMENT IN A MANNER AS TO CONFORM TO STRUCTURE, AVOID OBSTRUCTIONS, PRESERVE HEADROOM, AND KEEP OPENINGS AND PASSAGEWAYS CLEAR. ALL INSTALLATIONS SHALL BE CONSISTENT WITH NORMALLY ACCEPTABLE INDUSTRY STANDARDS. THE CONTRACTOR SHALL NOTIFY THE ARCHITECT IN WRITING OF ANY DISCREPANCIES OR CONFLICTS THAT WOULD EFFECT THE SYSTEM PERFORMANCE OR INCUR ADDITIONAL COSTS. THIS NOTIFICATION SHALL BE SUBMITTED PRIOR TO INSTALLATION OF THE ITEMS CONCERNED.
23. EACH PLUMBING FIXTURES THAT CONNECT TO THE SANITARY SEWER SYSTEM SHALL BE PROPERLY TRAPPED AND VENTED IN ACCORDANCE WITH THE 2016 CALIFORNIA PLUMBING CODE.
24. PROVIDE COMPLETE CONDENSATE DRAIN PIPING FOR ALL AC UNITS AND DISCHARGE CONDENSATE TO AN APPROVED RECEPTOR.
25. ALL LAYOUTS, PIPE SIZES, FIXTURE & EQUIPMENT SELECTIONS SHOWN ON THESE PLANS ARE FOR REFERENCE ONLY. THE CONTRACTOR SHALL PROVIDE A COMPLETE PLUMBING SYSTEM. THE DESIGN, CALCULATIONS, FIXTURE, TRIM, EQUIPMENT AND MATERIALS SELECTIONS & DRAWINGS SHALL BE SUBMITTED FOR REVIEW AND APPROVAL AS SPECIFIED.
26. INSULATION THICKNESS AND R-VALUES SHALL EXCEED THE REQUIREMENTS OF TITLE 24 BY AT LEAST 20 PERCENT OR NEXT LARGER STANDARD SIZE, WHICH EVER IS GREATER. PIPE INSULATION SHALL BE NOT LESS THAN 1.0 INCH THICK, NOT INCLUDING THE MOISTURE BARRIER OR EXTERIOR JACKET THICKNESS.
27. ALL GAS PRESSURE REGULATOR SHALL BE LOCATED AT GROUND LEVEL OR CLOSE TO APPLIANCE AND LOCATIONS SHALL BE COORDINATED WITH THE ARCHITECT FOR APPROVAL. SIZE AND INSTALLATION SHALL BE AS PER MANUFACTURER'S RECOMMENDATIONS. NO MEDIUM PRESSURE GAS INSIDE THE BUILDING.
28. NO GAS & WATER PIPE SHALL BE INSTALLED UNDER BUILDING SLAB. GAS & WATER PIPES SHALL RISE TIGHT AGAINST EXTERIOR WALL UP TO MIN. 18" AFF AND PENETRATE INTO BUILDING. PROVIDE SHUT-OFF VALVE AND REGULATOR ABOVE GRADE AT INCOMING GAS RISERS.
29. CONTRACTOR SHALL CAREFULLY REVIEW THESE PLANS AND SPECIFICATIONS PRIOR TO BID. CONTRACTOR SHALL ALSO REVIEW PLANS AND SPECIFICATIONS OF OTHER RELATED TRADES (INCLUDING MECHANICAL, CIVIL, STRUCTURAL, AND ELECTRICAL) PRIOR TO BID TO INSURE AN ACCURATE UNDERSTANDING OF EXACT SCOPE OF WORK. ANY ITEMS REQUIRING DESCRIPTION CLARIFICATION SHALL BE BROUGHT TO THE ATTENTION OF THE ARCHITECT IN SUFFICIENT TIME TO BE INCORPORATED INTO THE BID.
30. ALL PLUMBING SYSTEM COMPONENTS SHALL MEET OR EXCEED THE REQUIREMENTS OF C.B.C. (CALIFORNIA EDITION), CMC, CPC, NEC, NFPA, ASTM, ANSI, AND ALL LOCAL AND STATE CODE REQUIREMENTS.
31. ALL PLUMBING EQUIPMENT LISTED IN (CCR) SECTION 113 OF THE 2016 CALIFORNIA CODE OF REGULATIONS, TITLE-24, PART 1, ENERGY EFFICIENCY STANDARDS MUST BE CERTIFIED BY THE MANUFACTURER TO MEET OR EXCEED SPECIFICATIONS OR EFFICIENCIES ADOPTED BY THE CEC.
32. ALL PIPING EXPOSED TO WEATHER SHALL BE METALLIC.

GENERAL NOTES (CONTINUATION)

33. ALL FERROUS PIPING EXPOSED TO WEATHER SHALL BE GALVANIZED.
34. ALL PIPES, FITTINGS AND FIXTURES USED TO CONVEY POTABLE WATER SHALL BE LEAD FREE IN COMPLIANCE WITH CALIFORNIA AB 1953.
35. ALL INSULATING MATERIALS INSTALLED MUST BE CERTIFIED BY CALIFORNIA ENERGY COMMISSION TO MEET C.E.C. ENERGY EFFICIENCY STANDARDS (E.E.S.) SECTION 120.3 AND SECTION 1201.3.2.1.1 OF CMC (CALIFORNIA EDITION).
36. ALL INSULATION INSTALLED SHALL MEET THE FLAME SPREAD AND SMOKE DENSITY REQUIREMENTS OF SECTION 719 OF THE 2016 CBC.
37. ALL GAS APPLIANCES MUST HAVE PILOTLESS IGNITION SYSTEM IN ACCORDANCE WITH SECTION 115 OF THE 2013 CALIFORNIA CODE OF REGULATIONS, TITLE-24, PART 1, ENERGY EFFICIENCY STANDARDS, TABLE 4-4.
38. ALL FIXTURES REQUIRED TO BE ACCESSIBLE SHALL BE INSTALLED AS PER THE LATEST REQUIREMENTS OF TITLE 24 AND ADA (AMERICANS WITH DISABILITIES ACT).
39. CROSS CONNECTION PROTECTION SHALL BE PROVIDED AT ALL POTABLE WATER SUPPLIED APPLIANCES AND EQUIPMENT (OTHER THAN THOSE LISTED IN INFORMATION BULLETIN 103).
40. ALL HEATERS FOR DOMESTIC HOT WATER MUST BE CERTIFIED BY THE MANUFACTURER TO MEET THE SPECIFICATIONS OR EFFICIENCIES AS ADOPTED BY THE CEC. IN ACCORDANCE WITH SECTION 110.1 OF THE CCR AND ENERGY EFFICIENCY STANDARDS RESIDENTIAL NON-RESIDENTIAL
41. A WATER HEATER PRESSURE AND TEMPERATURE RELIEF DRAIN THAT TERMINATES OUTSIDE THE BUILDING SHALL COMPLY WITH SECTION 608.5 OF CPC.
42. WATER HEATER SHALL BE ANCHORED OR STRAPPED TO RESIST HORIZONTAL DISPLACEMENT DUE TO EARTHQUAKE MOTION PER SECTION 508.2 OF CPC.
43. WATER HEATER SHALL COMPLY WITH SECTION 608.3 OF CPC, FOR THERMAL EXPANSION REQUIREMENTS.
44. LAVATORY FAUCETS IN PUBLIC RESTROOM SHALL BE SELF CLOSING TYPE.
45. LAVATORY FAUCETS LOCATED AT NON RESIDENTIAL RESTROOMS SHALL BE SELF CLOSING TYPE AND SHALL NOT EXCEED A WATER FLOW OF 0.20 GALLONS PER US.
46. METERING FAUCETS SHALL BE 0.5 GPM MAXIMUM.
47. KITCHEN FAUCETS AND WASH FOUNTAINS SHALL BE 1.8 GPM MAXIMUM.
48. WATER CLOSETS (GRAVITY TANK TYPE, FLUSHOMETER TANK, FLUSHOMETER VALVE AND ELECTROMECHANICAL HYDRAULIC TYPE) SHALL BE 1.28 GPF MAXIMUM.
49. URINALS SHALL BE 0.5 GPF MAXIMUM.
50. LAVATORIES SHALL BE 1.0 GALLON PER MINUTE MAXIMUM.
51. SHOWERHEADS SHALL BE 1.8 GALLONS PER MINUTE MAXIMUM.
52. DISHWASHERS AND WASHING MACHINES SHALL MEET US EPA WATER SENSE LABELING REQUIREMENT.
53. SHOWERS AND TUB-SHOWERS COMBINATIONS SHALL BE PROVIDED WITH MIXING VALVES PER SECTION 408.3 CPC.
54. ROUTING AND TERMINATION OF FLUE AND COMBUSTION AIR INTAKE FOR WATER HEATER SHALL COMPLY WITH CHAPTER 5, CPC 2016 WITH MANUFACTURER'S SPECIFICATIONS.
55. A SLOPE OF NOT LESS THAN 1/8 INCH PER FOOT OR 1.0 % IS PROVIDED FOR DRAINAGE PIPING 4 INCHES OR LARGER ONLY WHERE IMPRACTICAL DUE TO DEPTH OF THE STREET SEWER, TO THE STRUCTURAL TO OBTAIN A SLOPE OF 1/4 INCH PER FOOT OR 2 % AND THAT IS SUBJECT TO THE CITY OF SAN DIEGO PLUMBING FIELD INSPECTOR.
56. FLOOR DRAINS OR SIMILAR TRAPS DIRECTLY CONNECTED TO THE DRAINAGE SYSTEM AND SUBJECT TO INFREQUENT USE SHALL BE PROVIDED WITH AN AUTOMATIC MEANS OF MAINTAINING THEIR WATER SEALS
57. BUILDING DRAIN AND VENT PIPING MATERIALS SHALL COMPLY WITH SECTIONS 701.0 AND 903.0 OF THE CALIFORNIA PLUMBING CODE.
58. ALL SANITARY SYSTEM MATERIALS SHALL BE LISTED BY AN APPROVED LISTING AGENCY.
59. EACH VENT SHALL RISE VERTICALLY TO A POINT NOT LESS THAN SIX (6) INCHES ABOVE THE FLOOD LEVEL RIM OF THE FIXTURE SERVED BEFORE OFFSETTING HORIZONTALLY OR BEFORE BEING CONNECTED TO ANY OTHER VENT.
60. WHEN A SHOWER IS SERVED BY MORE THAN ONE SHOWERHEAD, THE COMBINED FLOW RATE OF ALL THE SHOWERHEADS AND/OR OTHER SHOWER OUTLETS CONTROLLED BY SINGLE VALVE NOT EXCEED 2.0 GALLONS PER MINUTE AT 80 PSI, OR THE SHOWER SHALL BE DESIGNED TO ALLOW OUTLET TO BE IN OPERATION AT A TIME (CAL GREEN SECTION 5.303.3.3.2)
61. PLUMBING FIXTURES AND FITTINGS SHALL COMPLY WITH ALL THE REQUIREMENTS IN SECTION 4.303 IN THE CALIFORNIA GREEN BUILDING CODE.
62. PIPE INSULATION: INSULATION OF DOMESTIC HOT WATER PIPING SHALL BE IN ACCORDANCE WITH SECTION 609.11.1 AND SECTION 609.2 CPC 2016.
609.11.1 INSULATION REQUIREMENTS. DOMESTIC WATER PIPING SHALL BE INSULATED 609.12.1 PIPE INSULATION WALL THICKNESS. HOT WATER PIPING INSULATION SHALL HAVE A MINIMUM WALL THICKNESS OF NOT LESS THAN THE DIAMETER OF THE PIPE FOR A PIPE UP TO 2 INCHES IN DIAMETER. INSULATION WALL THICKNESS SHALL BE NOT LESS THAN 2 INCHES FOR A PIPE OF 2 INCHES OR MORE IN DIAMETER

PLUMBING LEGEND

SYMBOL	ABBREVIATION	DESCRIPTION
	POC/POD	POINT OF CONNECTION / POINT OF DISCONNECTION
W	W	SANITARY OR WASTE PIPING
	VT	SANITARY VENT PIPING
	CW	DOMESTIC COLD WATER PIPING
	HW	DOMESTIC HOT WATER
	HWR	DOMESTIC HOT WATER RETURN
G	G	NATURAL GAS PIPING - 8" WATER COLUMN
CD	CD	CONDENSATE DRAIN PIPING
		PIPE DOWN
		PIPE UP
		PIPE BRANCH - TOP CONNECTION
		PIPE BRANCH - BOTTOM CONNECTION
		PIPE BRANCH - SIDE CONNECTION
		PIPE CAP
		DIRECTION OF FLOW
		PIPE SLOPE & DIRECTION OF FALL
		THERMOMETER
	WHA	WATER HAMMER ARRESTOR
		PIPE BREAK
	WCO	WALL CLEANOUT
		PIPE CONTINUATION
	FCO/COTG	FLOOR CLEANOUT OR CLEANOUT TO GRADE
	FD	FLOOR DRAIN
	FS	FLOOR SINK
	SOV	SHUT OFF VALVE
	GPR	GAS PRESSURE REGULATOR
		PLUG VALVE / GAS COCK
		PRESSURE GUAGE
	AFF	ABOVE FINISHED FLOOR
	AFG	ABOVE FINISHED GRADE
	ARCH	ARCHITECT OR ARCHITECTURAL
	B/C	BELOW COUNTER
	B/G	BELOW GRADE
	B/S	BELOW SLAB
	C.I.	CAST IRON
	DF	DRINKING FOUNTAIN
	DWG/DWGS	DRAWING/DRAWINGS
	DN	DOWN
	EA	EACH
	ELECT	ELECTRICAL
	°F	DEGREES FAHRENHEIT
	FFE	FINISHED FLOOR ELEVATION
	FH	FUME HOOD
	FT	FEET
	FT HD	FEET OF HEAD
	GPF	GALLONS PER FLUSH
	GPM	GALLONS PER MINUTE
	GA	GAUGE
	GALV	GALVANIZED
	HB	(+18")
	HD	HEAD
	IPS	IRON PIPE SIZE
	I.E.	INVERT ELEVATION
	MAX	MAXIMUM
	MECH	MECHANICAL
	MIN	MINIMUM
	MS	MOP SINK / SERVICE SINK
	MTD	MOUNTED
	NTS	NOT TO SCALE
	OPER	OPERATING
	PD	PRESSURE DROP
	PSI	POUNDS PER SQUARE INCH
	P&TRV	PRESSURE AND TEMPERATURE RELIEF VALVE
	QTY	QUANTITY
	SPEC	SPECIFICATION
	SQ FT	SQUARE FEET
	TYP	TYPICAL
	VTR	VENT THRU ROOF
	W.C.	WATER COLUMN

EQUIPMENT IDENTIFICATION SYMBOL

EQUIPMENT TYPE
EQUIPMENT IDENTIFIER

SHEET: P0.0.1

REGISTERED PROFESSIONAL ENGINEER
JASON VANDER VEEN
No. 34874
Exp. June 30, 2020
MECHANICAL
STATE OF CALIFORNIA

VanderVeen
ENGINEERING CONSULTANTS INC.

DEPARTMENT OF PARKS AND RECREATION
COUNTY OF SAN DIEGO
5500 OVERLAND DRIVE, SUITE 410 SAN DIEGO, CALIFORNIA 92123

NO.	REVISIONS	APPR.	DATE
Rev	Description		Date

DESIGNED BY: VEC
DRAWN BY: VEC
CHECKED BY: VEC
PROJECT MANAGER:

LAKESIDE EQUESTRIAN FACILITY
PLUMBING LEGEND AND NOTES

SCALE AS SHOWN
PROJ. NO. 1020367
FILE NO.
SHEET 38 OF 68

-1 0 1 2 3 4 5 6 7 8 9 10

FOR REDUCED PLANS
ORIGINAL SCALE IS IN INCHES

ISSUE FOR BID - 2/03/2020 NOT FOR CONSTRUCTION

PIPE MATERIAL SCHEDULE

DOMESTIC WATER PIPING ABOVE GRADE TYPE "L" COPPER TUBING, HARD DRAWN CONFORMING TO ASTM B 88, WITH WROUGHT COPPER SOLDER SWEAT FITTINGS CONFORMING TO ASTM B 16.22. PROVIDE LABELING AND INSULATION.
DOMESTIC WATER PIPING UNDERGROUND OR BELOW SLAB: TYPE "K" HARD COPPER TUBING ANNEALED, WITH NO FITTINGS CONFORMING TO ASTM B 88.
WASTE AND VENT PIPING: ABOVE GRADE - PVC SCHEDULE 40 WITH PVC SCHEDULE 40 FITTINGS. BELOW GRADE - PVC SCHEDULE 40 WITH PVC SCHEDULE 40 FITTINGS.
CONDENSATE DRAIN PIPING: PVC SCHEDULE 40 PIPE AND FITTINGS SHALL BE MANUFACTURED FROM VIRGIN RIGID PVC VINYL COMPOUND A CELL CLASS OF 12454 AS IDENTIFIED IN ASTM D 1784
NATURAL GAS PIPING ABOVE GRADE: SCHEDULE 40 BLACK STEEL, CONFORMING TO ASTM A53 WITH 150 PSIG MALLEABLE IRON THREADED FITTINGS CONFORMING TO ANSI//ASME B16.3. PROVIDE LABELING
GAS PIPING EXPOSED TO WHEATHER: SCHEDULE 40 GALVANIZED STEEL, CONFORMING TO ASTM A53 WITH 150 PSIG MALLEABLE IRON THREADED FITTINGS CONFORMING TO ANSI//ASME B16.3. PROVIDE LABELING
GAS PIPING BELOW GRADE: POLYETHYLENE WITH FUSION WELD JOINTS.

High Efficiency eF Series® Light Duty Commercial Power Vent Gas Water Heater

High Efficiency Model

NATURAL GAS AND LIQUID PROPANE GAS

Model Number	Nominal Gal. Capacity U.S. Gal.	Nominal Gal. Capacity Imp. Gal.	DOE Rated Storage Volume (Gal.)	LP kW Input	LP BTU/Hr. Input	First Hour Rating	Uniform Energy Factor	Recovery at 100°F Rise* U.S. GPH	Recovery at 100°F Rise* Imp. GPH	Recovery at 100°F Rise* LP U.S. GPH	Recovery at 100°F Rise* LP Imp. GPH
LC2PV50H763N	50	42	49	76,000	76,000	129	0.80	63	48	63	48

Model Number	A Floor to Vent Conn. in.	B Jacket Dia. in.	C Vent Size in.	D Floor to T&P Conn. in.	E Floor to Gas Conn. in.	F Floor to Top of Heater in.	G Floor to Water Conn. in.	H Depth in.	J C/L of Water Conn. in.	K Floor to Space Heating Inlet in.	L Floor to Space Heating Outlet in.	M Water Conn. NPT in.	R Space Heating Conn. Size in.	S Gas Conn. Size in.	Approx. Shipping Weight lbs.
LC2PV50H763N	67 7/16	24	2, 3, or 4	46 1/2	9 1/2	48 7/16	51 11/16	34 7/16	8	15 1/16	46 1/2	1 1/4	1 1/4	1/2	225

Model Number	A Floor to Vent Conn. mm.	B Jacket Dia. mm.	C Vent Size mm.	D Floor to T&P Conn. mm.	E Floor to Gas Conn. mm.	F Floor to Top of Heater mm.	G Floor to Water Conn. mm.	H Depth mm.	J C/L of Water Conn. mm.	K Floor to Space Heating Inlet mm.	L Floor to Space Heating Outlet mm.	M Water Conn. NPT mm.	R Space Heating Conn. Size mm.	S Gas Conn. Size mm.	Approx. Shipping Weight kg.
LC2PV50H763N	1713	610	51, 76, or 102	1191	238	1180	1313	875	203	397	1181	19	19	13	102

Propane models feature a Titanium Stabilized Stainless Steel propane burner.
For propane (LP) models, change suffix"N" to "X".
Uniform Energy Factor and First Hour Rating is based on the latest AHRI directory listings.

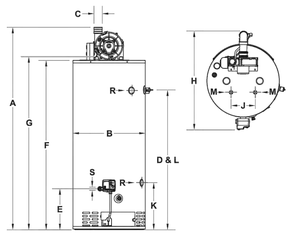

LC2PV50H763N	2" Vent Pipe	3" Vent Pipe	4" Vent Pipe
Max. Equivalent Length	150 ft.	1120 ft.	1180 ft.
Min. Equivalent Length	7 ft.	15 ft.	15 ft.
Number of 90° Elbows	1	45 ft.	115 ft.	175 ft.
	2	40 ft.	110 ft.	170 ft.
	3	35 ft.	105 ft.	165 ft.

Subtract 5 ft. (1.5m) for each additional 90° elbow.
† For high altitude installations, consult the installation instructions.

General:
Meets EPACT Requirements.
All gas water heaters are certified at 300 PSI test pressure (2068 kPa) and 150 PSI working pressure (1034 kPa). All water connections are 3/4" NPT (19mm) on 8" (203mm) centers, all gas connections are 1/2" (13mm). All models design certified by CSA International (formerly AGA/CGA), ANSI standard Z21.10.3 and peak performance rated.

Dimensions and specifications subject to change without notice in accordance with our policy of continuous product improvement.

Suitable for Water (Potable) Heating and Space Heating. Toxic chemicals, such as those used for boiler treatment, shall NEVER be introduced into this system. This unit may NEVER be connected to any existing heating system or component(s) previously used with a non-potable water heating appliance.

— BRADFORD WHITE IS —
AMERICAN STRONG.

BRADFORD WHITE WATER HEATERS
Ambler, PA

For field service, contact your professional installer or local Bradford White sales representative.
Sales **800-523-2931** ■ Fax **215-641-1612**
Technical Support **800-334-3393** ■ Email **techserv@bradfordwhite.com**
Warranty **800-531-2111** ■ Email **warranty@bradfordwhite.com**
International: Telephone **1-215-641-9400** ■ Email **international@bradfordwhite.com / www.bradfordwhite.com**

Built to be the Best

1704-A-0418

©2018, Bradford White Corporation. All rights reserved.

Printed in U.S.A.

FIXTURE DATA AND WATER CALCULATION - KITCHEN + MEETING

ITEM	DESCRIPTION	NO. OF FIXT	WFU 'S	DFU 'S	CW	HW	SEWER
WC-1A	WATER CLOSET (FLUSH VALVE)	3	5.0	4.0	15.0	1	12.0
LV-1A	LAVATORY	3	1.0	2.0	3.0	2.3	6.0
SHR-1A	SHOWER	2	2.0	2.0	4.0	4	4.0
HS-1	HAND SINK	2	2.0	2.0	4.0	3.0	4.0
MS-1	MOP SINK	1	3.0	3.0	3.0	2.3	3.0
EWC-1A	ELECTRIC WATER COOLER	1	0.5	0.5	0.5		0.5
3-COMP SINK	3-COMP SINK	1	3.0	3.0	3.0	2.3	3.0
PREP SINK	PREP SINK	1	3.0	3.0	3.0	2.3	3.0
GFS-1 TO GFS-2	GREASE FLOOR SINK	2	0	2.0	0	0.0	4.0
GFD-1	GREASE FLOOR DRAIN	1	0	2.0	0	0.0	2.0
FS-1	FLOOR SINK	2	0	2.0	0	0.0	4.0
FD-1	FLOOR DRAIN	8	0	2.0	0	0.0	16.0
	TOTAL WFU'S, DFU'S	0		0	35.5	17.0	61.5
MAIN DOMESTIC WATER SUPPLY SIZING BASE ON LATEST EDITION CPC 2016 TABLE A 103.1, CHART A 105.1 (1)		COLD WATER FIXTURES UNITS = 44 GPM HOT WATER FIXTURES UNITS == 13 GPM					

FIXTURE DATA AND WATER CALCULATION - KITCHEN + MEETING

ITEM	DESCRIPTION	NO. OF FIXT	WFU 'S	DFU 'S	CW	HW	SEWER
WC-1A	WATER CLOSET (FLUSH VALVE)	7	5.0	4.0	35.0	1	28.0
LV-1A	LAVATORY	4	1.0	2.0	4.0	3.0	8.0
UR-1A	URINAL	3	4.0	2.0	12.0	4	6.0
EWC-1A	ELECTRIC WATER COOLER	1	0.5	0.5	0.5		0.5
FD-1	FLOOR DRAIN	3	0	2.0	0	0.0	6.0
	TOTAL WFU'S, DFU'S	0		0	51.5	8.0	48.5
MAIN DOMESTIC WATER SUPPLY SIZING BASE ON LATEST EDITION CPC 2016 TABLE A 103.1, CHART A 105.1 (1)		COLD WATER FIXTURES UNITS = 52 GPM					

PIPING FRICTION LOSSES

WATER PRESSURE AT THE STREET. FIELD VERIFY PRIOR TO START OF WORK.	105	PSI
LENGTH OF DOMESTIC WATER SYSTEM TO THE FURTHEST RUN.	200	FT
WATER METER - SEE CIVIL	8	PSI
BACKFLOW PREVENTER - SEE CIVIL	10	PSI
PRESSURE REGULATOR	10	PSI
TOTAL LOSSES	28	PSI
PRESSURE INSIDE THE BUILDING	65	PSI
STATIC HEIGHT	15	FT
RESIDUAL PRESSURE:	25	PSI
PRESSURE AVAILABLE FOR FRICTION LOSS	33.55	PSI
ALLOWABLE FRICTION LOSS PER HUNDRED FEET	16.8	PSI

COLD WATER PIPE SIZING					HOT WATER PIPE SIZING				
PIPE DIA.	GPM	FLUSH TANK FIXTURE UNIT	FLUSH VALVE FIXTURE UNIT	VELOCITY	PIPE DIA.	GPM	FLUSH TANK FIXTURE UNIT	FLUSH VALVE FIXTURE UNIT	VELOCITY
1/2"	3.6	1	--	5.1	1/2"	3.5	1	--	5.0
3/4"	10.0	5	--	6.7	3/4"	7.5	3	--	5.0
1"	19.6	20	6	8.0	1"	13.4	8	--	5.0
1-1/4"	29.6	52	13	8.0	1-1/4"	19.6	20	6	5.0
1-1/2"	41.3	91	29	8.0	1-1/2"	27.5	44	10	5.0
2"	71.3	232	114	8.0	2"	46.4	113	41	5.0
2-1/2"	119.6	477	361	8.0	2-1/2"	72.3	237	117	5.0
3"	177.7	801	756	8.0	3"	115.6	456	340	5.0
3-1/2"	205.6	984	981	8.0	3-1/2"	141.2	593	489	5.0
4"	283.0	1625	1625	8.0	4"	186.7	860	828	5.0
5"	427.5	2948	2948	8.0	5"	284.1	1635	1635	5.0
6"	676.3	6436	6436	8.0	6"	437.7	3046	3046	5.0

COLD WATER VELOCITY NOT TO EXCEED 8 FEET PER SECOND | HOT WATER VELOCITY NOT TO EXCEED 5 FEET PER SECOND

PLUMBING FIXTURE SCHEDULE MEETING ROOM AND KITCHEN

ITEM	WASTE	TRAP	VENT	CW	HW	MOUNT	DESCRIPTION
WC-1A	4"	4"	2"	1-1/4"	--	FLOOR	WATER CLOSET FLUSH VALVE. SEE ARCHITECTURAL FOR SPECIFICATIONS. 1.28 GPM (SEE PRE-ENGINEERED SPECS)
LV-1A	2"	2"	2"	1/2"	1/2"	WALL	LAVATORY. PRE-ENGINEERED SPECS 0.5 GPM. PROVIDE THERMOSTATIC MIXING VALVE SET TO 110°F LOCATED UNDERNEATH LAVATORY.
SHD-1	2"	2"	2"	--	--	FLOOR	SHOWER DRAIN. SEE PRE-ENGINEERED SPECS
SHR-1A	--	--	--	1/2"	1/2"	WALL	SHOWER ASSEMBLY. SEE PRE-ENGINEERED SPECS
MS-1	3"	2"	2"	1/2"	1/2"	FLOOR	MOP SINK. SEE PRE-ENGINEERED SPECS
3-COMP	INDIRECT	--	--	½"	½"	FLOOR	3 COMPARTMENT SINK. SEE PRE-ENGINEERED SPECS
PREP-1	INDIRECT	--	--	½"	½"	FLOOR	PREPARATION SINK. SEE PRE-ENGINEERED SPECS
GHS-1	2"	2"	2"	½"	½"	WALL	HAND SINK. SEE PRE-ENGINEERED SPECS
GFS-1 GFS-2	SEE P2.1 PLAN	2"	2"	--	--	FLOOR	GREASE FLOOR SINK: SEE PRE-ENGINEERED SPECS
GFD-1 GFD-2	2"	2"	2"	--	--	FLOOR	GREASE FLOOR DRAIN: SEE PRE-ENGINEERED SPECS
HS-1	2"	2"	2"	½"	½"	WALL	HAND SINK. SEE PRE-ENGINEERED SPECS
FS-1	2"	2"	2"	--	--	FLOOR	FLOOR SINK: SEE PRE-ENGINEERED SPECS
FD-1	2"	2"	2"	--	--	FLOOR	FLOOR DRAIN: SEE PRE-ENGINEERED SPECS
UR-1A	2"	2"	2"	3/4"		WALL	URINAL. SEE PRE-ENGINEERED SPECS

FIXTURE EQUIPMENT SCHEDULE

ITEM	LOCATION	DESCRIPTION
TP 1	SEE PLAN	TRAP PRIMER: "MIFAB" #M-500 PRESSURE DROP ACTIVATED, BRASS CONSTRUCTION, PROVIDE WITH M1-DU 4-WAY DISTRIBUTION UNIT (IF APPLICABLE), PROVIDE WITH ACCESS PANEL.
ET 1	SEE PLAN	EXPANSION TANK: "FLEXCON" PH-12, 4.8 GALLONS CAPACITY, 11" DIAMETER x 14.5" HEIGHT, 10 LBS. MAXIMUM WORKING PRESSURE 150 PSI. FACTORY PRE-CHARGE 40 PSI. MAXIMUM WORKING TEMPERATURE 200°F.
CP 1	SEE PLAN	CIRCULATING PUMP:. "GRUNDFOS" MODEL ALPHA2 MAX 21 GPM, MAX 19FT OF HEAD 115 VOLTS SINGLE PHASE 1/6 HP .65 AMPS
GI 1	SEE SHEET P2.01	GREASE INTERCEPTOR: SCHIER GB-3. 4" INLET AND OUTLET. PROVIDE WITH ALL ACCESSORIES FOR A FULLY FUNCTIONAL SYSTEM.
TMV 1	UNDERNEATH LAVATORY AND HAND SINK	TERMOSTAITC MIXING VALVE: "LEONARD" MODEL 170-LF SET @ 110 °F

SHEET: P0.0.2

REGISTERED PROFESSIONAL ENGINEER
JASON VANDER VEEN
No. 34874
Exp. June 30, 2020
MECHANICAL
STATE OF CALIFORNIA

VanderVeen ENGINEERING CONSULTANTS INC.

DEPARTMENT OF PARKS AND RECREATION
COUNTY OF SAN DIEGO
5500 OVERLAND DRIVE, SUITE 410 SAN DIEGO, CALIFORNIA 92123

NO.	REVISIONS	APPR.	DATE
Rev	Description		Date

DESIGNED BY: VEC
DRAWN BY: VEC
CHECKED BY: VEC
PROJECT MANAGER:

LAKESIDE EQUESTRIAN FACILITY
PLUMBING SCHEDULES

SCALE AS SHOWN
PROJ. NO. 1020367
FILE NO.
SHEET 39 OF 68

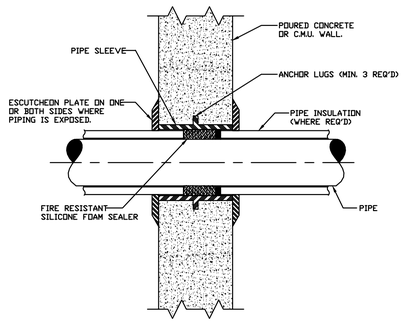

PIPE SLEEVE THRU WALL DETAIL

SCALE NONE — 9

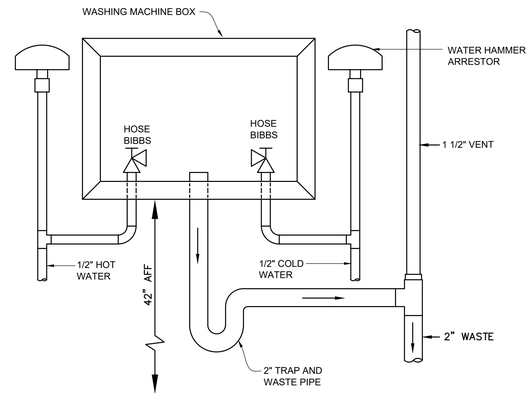

CLOTHES WASHER BOX DETAIL

SCALE NONE — 6

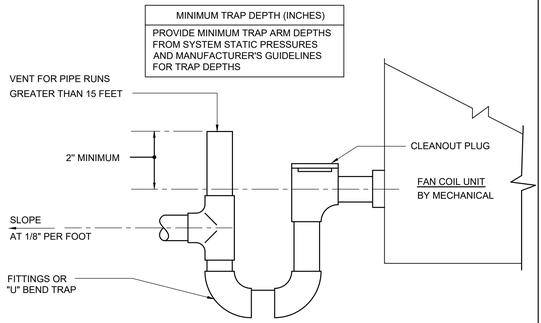

CONDENSATE DRAIN DETAIL

SCALE NONE — 3

FOR REDUCED PLANS
ORIGINAL SCALE IS IN INCHES

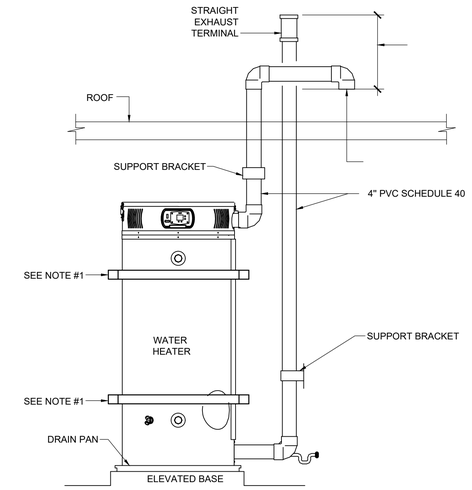

NOTES:

1. PROVIDE 1 1/4" x 1/8" STEEL STRAPS AND OTHER AT LOWER (1/3) ONE AT THE UPPER (1/3) OF ITS VERTICAL DIMENSIONS. AT LOWER POINT, A MIN. DISTANCE OF FOUR INCHES SHALL BE MAINTAINED ABOVE THE CONTROLS WITH THE STRAPPING. STRAPS SHALL BE ANCHORED TO WALL.
2. ROUTE 3" PVC TO EXTERIOR WALL
3. VERTICAL VENTING SYSTEM MUST BE SUPPORTED EVERY 5 FEET OF VERTICAL RUN AND EVERY 3 FEET OF HORIZONTAL RUN OF VENT PIPE LENGTH.
4. INSTALL PER MANUFACTURER'S INSTALLATION GUIDE AND RECOMMENDATIONS.
5. SEE ARCHITECTURAL DETAIL FOR MOUNTING HEIGHT AND STRUCTURAL PLATFORM

WATER HEATER DETAIL

SCALE NONE — 1

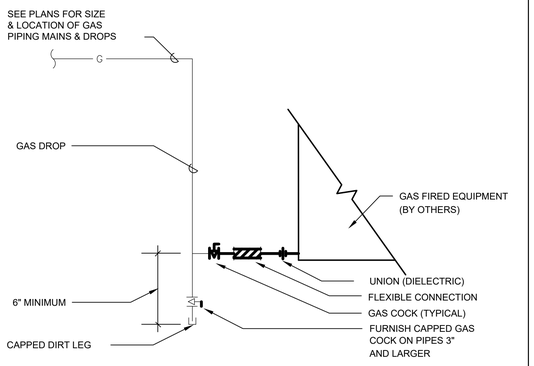

GAS CONNECTION DETAIL

SCALE NONE — 10

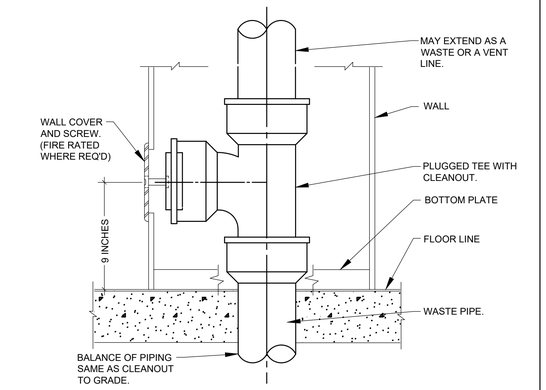

WALL CLEAN OUT DETAIL

SCALE NONE — 7

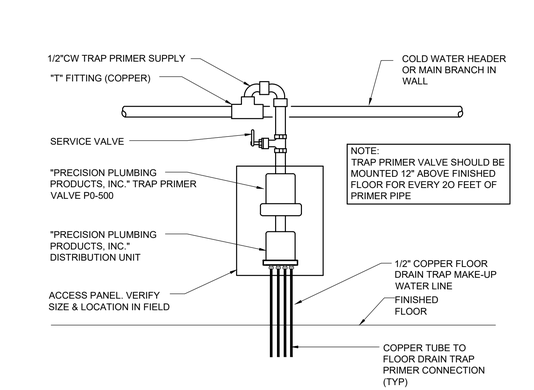

TRAP PRIMER DETAIL

SCALE NONE — 4

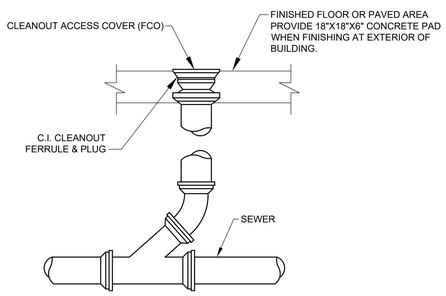

FLOOR CLEAN OUT DETAIL

SCALE NONE — 2

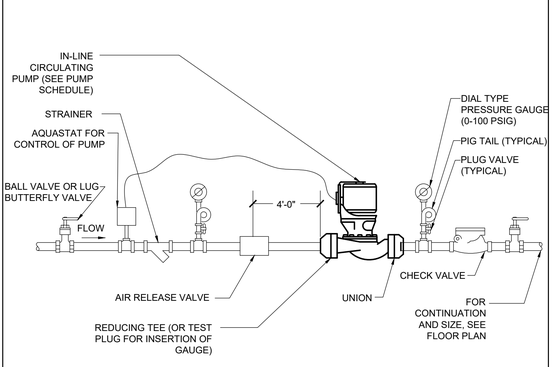

CIRCULATING PUMP DETAIL

SCALE NONE — 11

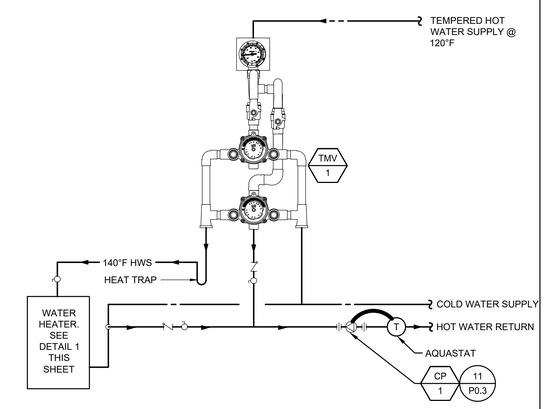

CIRCULATING PUMP DETAIL

SCALE NONE — 8

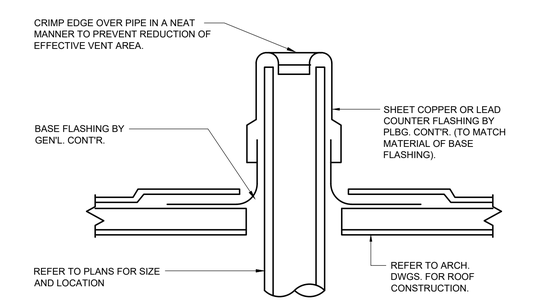

VENT THRU DETAIL

SCALE NONE — 5

SHEET: P0.0.3

REGISTERED PROFESSIONAL ENGINEER — JASON VANDER VEEN — No. 34874 — Exp. June 30, 2020 — MECHANICAL — STATE OF CALIFORNIA

VanderVeen ENGINEERING CONSULTANTS INC.

ISSUE FOR BID - 2/03/2020 NOT FOR CONSTRUCTION

DEPARTMENT OF PARKS AND RECREATION
COUNTY OF SAN DIEGO
5500 OVERLAND DRIVE, SUITE 410 SAN DIEGO, CALIFORNIA 92123

CIRCULATING PUMP DETAIL

NO.	REVISIONS	APPR.	DATE
Rev	Description		Date

DESIGNED BY: VEC
DRAWN BY: VEC
CHECKED BY: VEC
PROJECT MANAGER:

LAKESIDE EQUESTRIAN FACILITY
PLUMBING DETAILS

SCALE AS SHOWN
PROJ. NO. 1020367
FILE NO.
SHEET 40 OF 68

-1 0 1 2 3 4 5 6 7 8 9 10

FOR REDUCED PLANS
ORIGINAL SCALE IS IN INCHES

ISSUE FOR BID - 2/03/2020 NOT FOR CONSTRUCTION

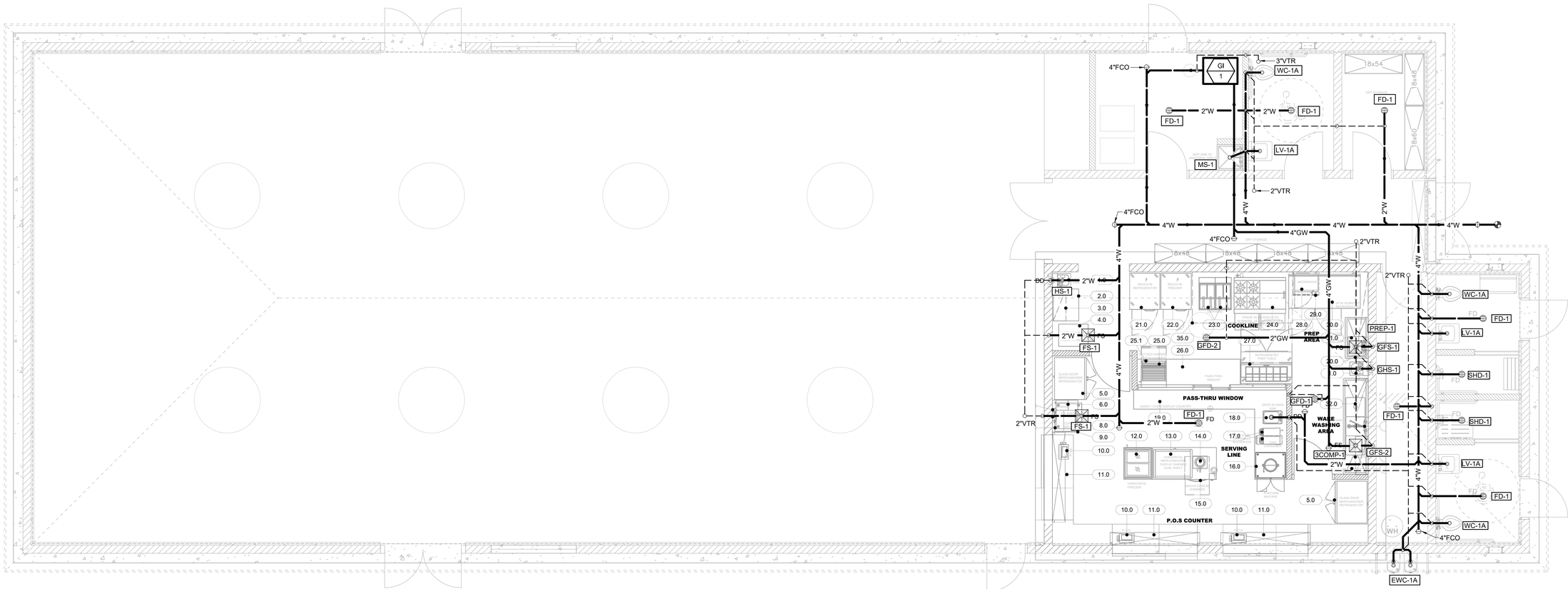

PLUMBING FLOOR PLAN WASTE AND VENT MEETING ROOM 1
SCALE: 1/4"=1'-0"

SHEET: P1.1.1

REGISTERED PROFESSIONAL ENGINEER
JASON VANDER VEEN
No. 34874
Exp. June 30, 2020
MECHANICAL
STATE OF CALIFORNIA

VanderVeen
ENGINEERING CONSULTANTS INC.

DEPARTMENT OF PARKS AND RECREATION
COUNTY OF SAN DIEGO
5500 OVERLAND DRIVE, SUITE 410 SAN DIEGO, CALIFORNIA 92123

NO.	REVISIONS	APPR.	DATE
Rev	Description		Date

DESIGNED BY:	VEC
DRAWN BY:	VEC
CHECKED BY:	VEC
PROJECT MANAGER:	

LAKESIDE EQUESTRIAN FACILITY
PLUMBING FLOOR PLAN - WASTE

SCALE AS SHOWN	SHEET 41
PROJ. NO. 1020367	OF 68
FILE NO.	

-1 0 1 2 3 4 5 6 7 8 9 10

FOR REDUCED PLANS
ORIGINAL SCALE IS IN INCHES

ISSUE FOR BID - 2/03/2020 NOT FOR CONSTRUCTION

SHEET NOTES	
1	2"COLD WATER POINT OF CONNECTION. SEE CIVIL DRAWINGS FOR LOCATION OF WATER METER AND BACKFLOW PREVENTER
2	1/2"COLD WATER PIPING DOWN TO ITEM #7.1 WATER FILTER. ROUTE PURIFIED WATER TO COFFEE MAKER.
3	1/2"COLD WATER PIPING DOWN TO ITEM #8.1 WATER FILTER. ROUTE PURIFIED WATER TO ICE MACHINE
4	1/2"COLD AND HOT WATER PIPING DOWN TO ITEM #18.0 DROP HAND SINK
5	1/2"COLD AND HOT WATER PIPING DOWN TO ITEM #31.0 AND CONNECT TO ITEM #31.1 FAUCET
6	1/2"COLD AND HOT WATER PIPING DOWN TO ITEM #31.0 AND CONNECT TO ITEM #31.1 FAUCET

NOTE: ROUTE ALL PIPING ALONG CMU WALLS.

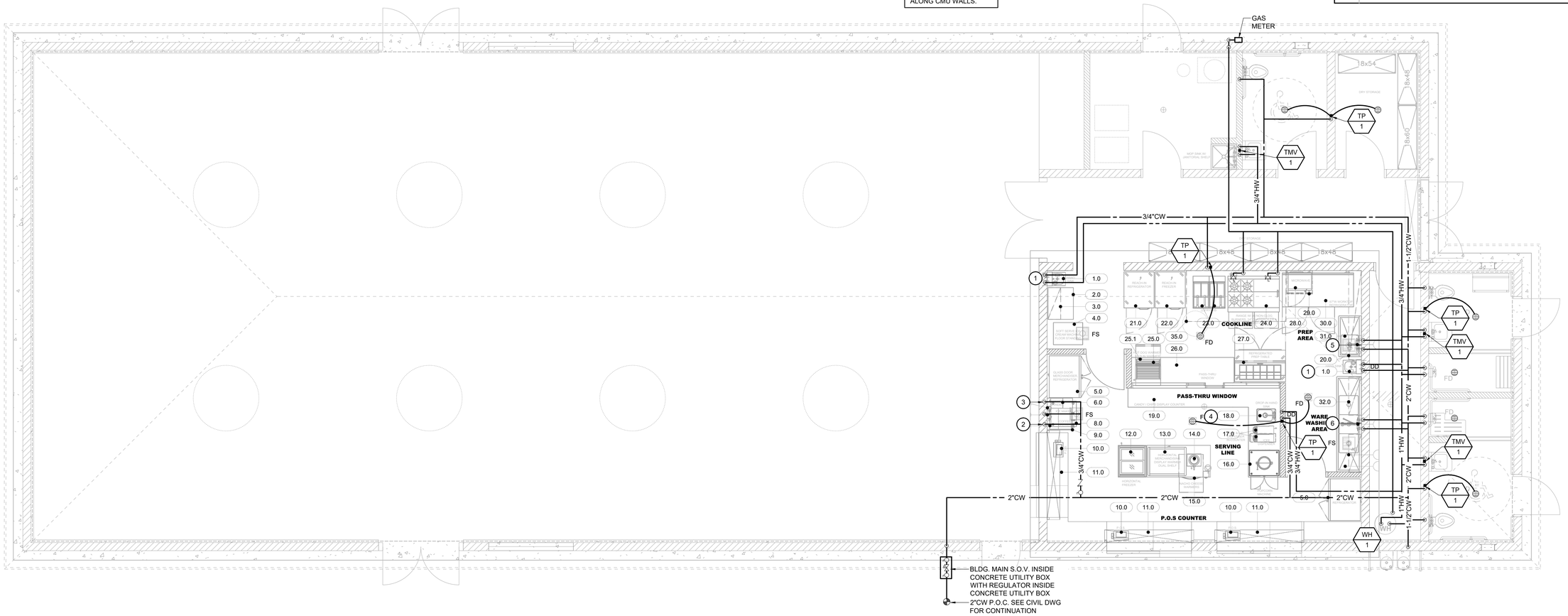

PLUMBING FLOOR PLAN WATER MEETING ROOM 1
SCALE: 1/4"=1'-0"

SHEET: P1.1.2

REGISTERED PROFESSIONAL ENGINEER
JASON VANDER VEEN
No. 34874
Exp. June 30, 2020
MECHANICAL
STATE OF CALIFORNIA

VanderVeen ENGINEERING CONSULTANTS INC.

DEPARTMENT OF PARKS AND RECREATION
COUNTY OF SAN DIEGO
5500 OVERLAND DRIVE, SUITE 410 SAN DIEGO, CALIFORNIA 92123

NO.	REVISIONS	APPR.	DATE
Rev	Description		Date

DESIGNED BY:	VEC
DRAWN BY:	VEC
CHECKED BY:	VEC
PROJECT MANAGER:	

LAKESIDE EQUESTRIAN FACILITY
PLUMBING FLOOR PLAN - WATER

SCALE	AS SHOWN
PROJ. NO.	1020367
FILE NO.	
SHEET	42 OF 68

FOR REDUCED PLANS
ORIGINAL SCALE IS IN INCHES

ISSUE FOR BID - 2/03/2020 NOT FOR CONSTRUCTION



WASTE PIPING DIAGRAM 1

SCALE: NONE

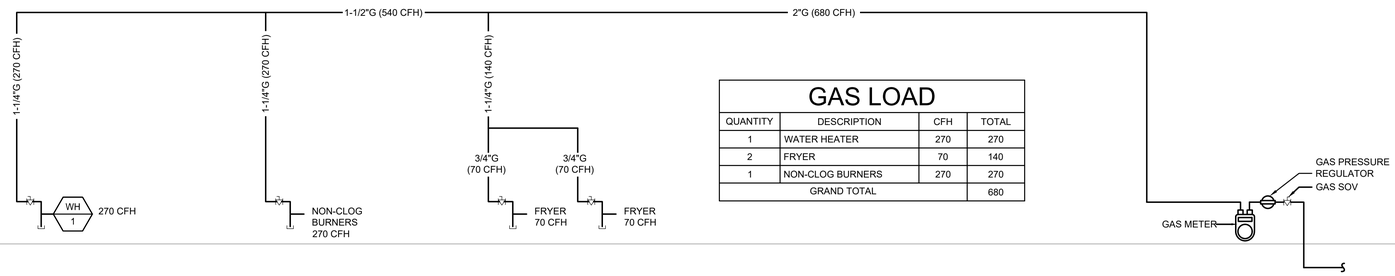

GAS LOAD

QUANTITY	DESCRIPTION	CFH	TOTAL
1	WATER HEATER	270	270
2	FRYER	70	140
1	NON-CLOG BURNERS	270	270
GRAND TOTAL			680

GAS PIPING CHART

PIPE Ø	CFH
1/2"	50
3/4"	104
1"	195
1-1/4"	400
1-1/2"	600
2"	1160

LOW PRESSURE GAS BASE ON CPC TABLE 12-8 NFPA 54 TABLE 6.2(e) @ 100 FT.

GAS PIPING DIAGRAM 2

SCALE: NONE

SHEET: P1.1.3

REGISTERED PROFESSIONAL ENGINEER
JASON VANDER VEEN
No. 34874
Exp. June 30, 2020
MECHANICAL
STATE OF CALIFORNIA

VanderVeen
ENGINEERING CONSULTANTS INC.

DEPARTMENT OF PARKS AND RECREATION
COUNTY OF SAN DIEGO
5500 OVERLAND DRIVE, SUITE 410 SAN DIEGO, CALIFORNIA 92123

NO.	REVISIONS	APPR.	DATE
Rev	Description		Date

DESIGNED BY: VEC
DRAWN BY: VEC
CHECKED BY: VEC
PROJECT MANAGER:

LAKESIDE EQUESTRIAN FACILITY
PLUMBING DIAGRAMS

SCALE: AS SHOWN
PROJ. NO.: 1020367
FILE NO.:
SHEET: 43 OF 68

-1 0 1 2 3 4 5 6 7 8 9 10

FOR REDUCED PLANS
ORIGINAL SCALE IS IN INCHES

ISSUE FOR BID - 2/03/2020 NOT FOR CONSTRUCTION

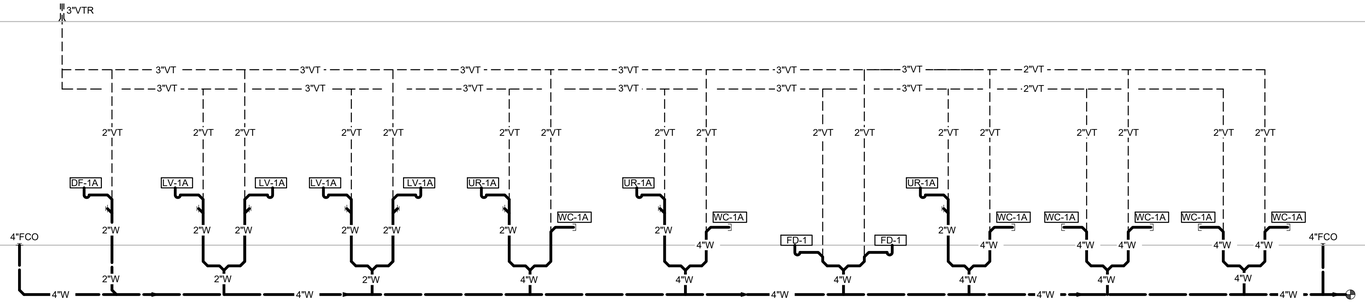

WASTE AND VENT PIPING DIAGRAM
SCALE: NONE
3

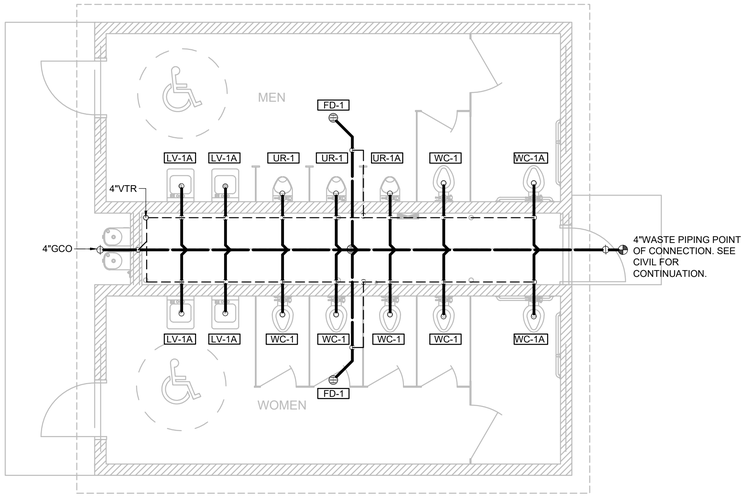

PLUMBING FLOOR PLAN - WASTE AND VENT
SCALE: NONE
1

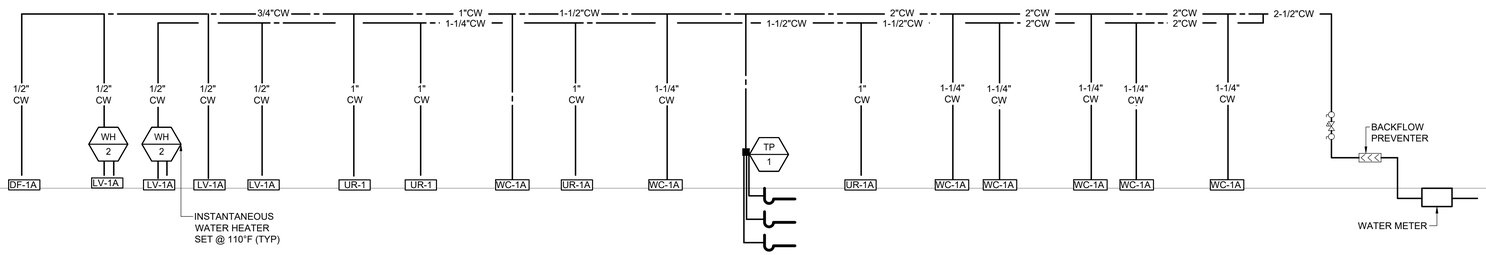

WATER PIPING DIAGRAM
SCALE: NONE
4

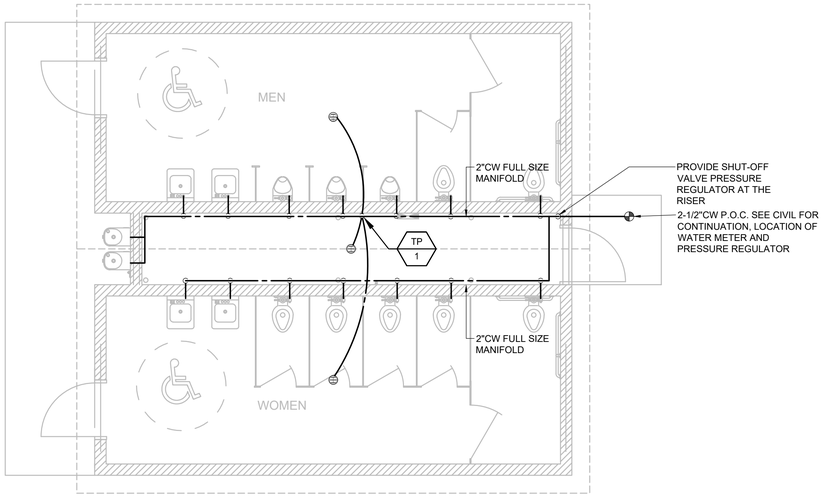

PLUMBING FLOOR PLAN - WATER
SCALE: NONE
2

SHEET: P1.2.1

REGISTERED PROFESSIONAL ENGINEER
JASON VANDER VEEN
No. 34874
June 30, 2020
MECHANICAL
STATE OF CALIFORNIA

VanderVeen ENGINEERING CONSULTANTS INC.

DEPARTMENT OF PARKS AND RECREATION
COUNTY OF SAN DIEGO
5500 OVERLAND DRIVE, SUITE 410 SAN DIEGO, CALIFORNIA 92123

NO.	REVISIONS	APPR.	DATE
Rev	Description		Date

DESIGNED BY: VEC
DRAWN BY: VEC
CHECKED BY: VEC
PROJECT MANAGER:

LAKESIDE EQUESTRIAN FACILITY
RESTROOM PLUMBING FLOOR PLAN/DIAGRAMS

SCALE: AS SHOWN
PROJ. NO.: 1020367
FILE NO.:
SHEET 44 OF 68

FOR REDUCED PLANS
ORIGINAL SCALE IS IN INCHES

INDEX OF SHEETS - AREA 2

ARCHITECTURAL
0.0 Title Sheet
A 0.0 Title Sheet
2.0 Site Plan
A 2.0.0 Area 2 - Overall Site Plan
A 2.1.0 Area 2 - Site Plan
2.1 Shade Structure
A 2.1.1 Floor Plan - Shade Structure
A 2.1.2 Elevations/ Sections - Shade Structure
2.4 Covered Viewing Box
A 2.4.1 Details - Covered Viewing Box
2.5 Electronic Scoreboard
A 2.5.1 Details - Electronic Scoreboard

AREA 2 OUTSIDE ARENA

NO.	STRUCTURES/ FEATURES
2.1	BLEACHERS SHADE STRUCTURE
2.2	BLEACHERS
2.3	ANNOUNCERS BOOTH
2.4	COVERED VIEWING BOX
2.5	ELECTRONIC SCOREBOARD
2.6	ARENA FENCING & GATES

ISSUE FOR BID - 2/03/2020 NOT FOR CONSTRUCTION

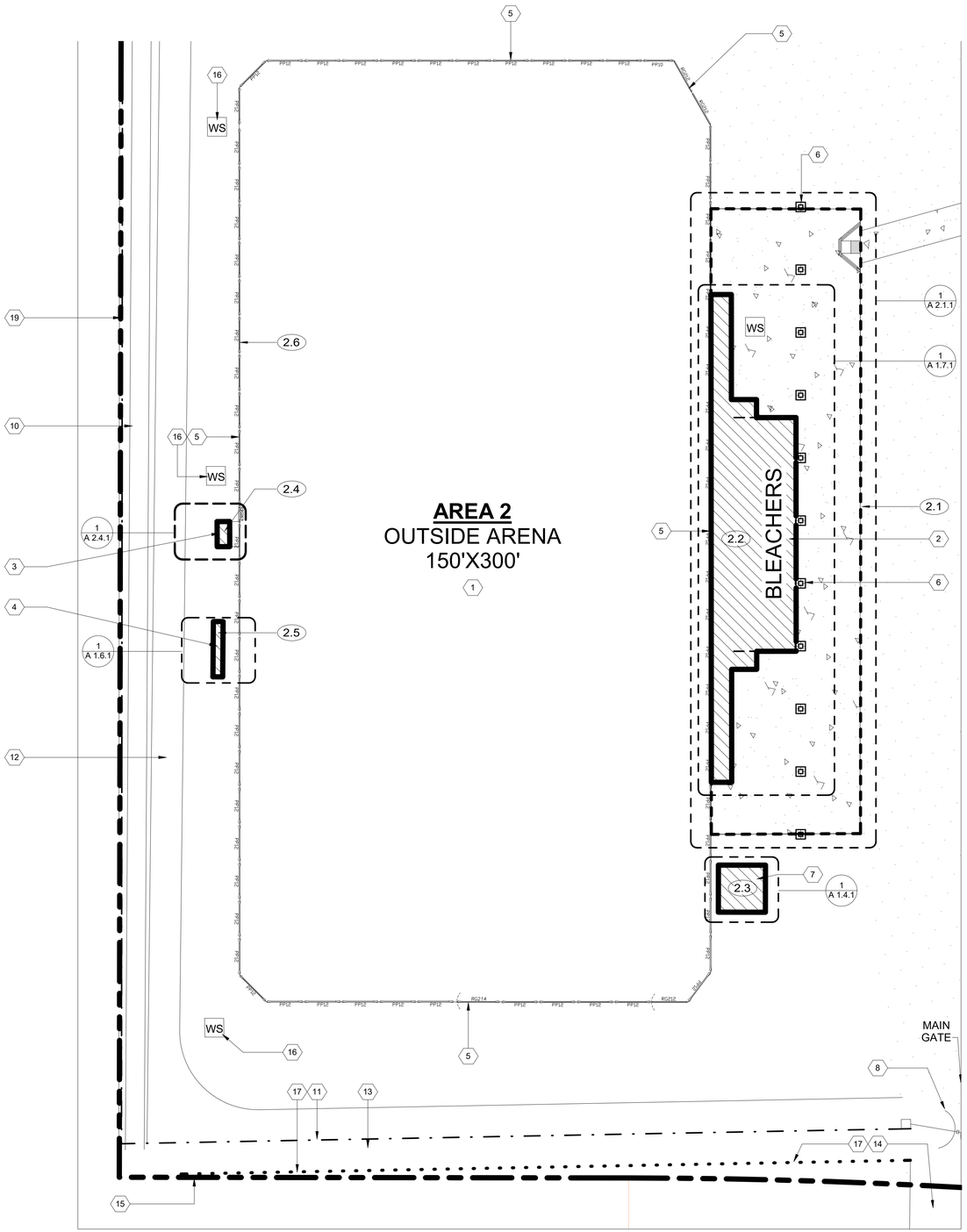

1 **Area 2 Site Plan**
1" = 20'-0"

SITE PLAN KEYNOTES:

1. OUTSIDE ARENA
2. BLEACHERS (SEE SHEETS # A 1.7.1, A 1.7.2)
3. COVERED VIEWING BOX
4. ELECTRONIC SCOREBOARD (SEE SHEET # A 1.6.1)
5. ARENA FENCING
6. LIMITS OF 200'X50' SHADE STRUCTURE (BY OTHERS)
7. ANNOUNCERS BOOTH (SEE SHEETS # A 1.4.1, A 1.4.2 (AREA 1)
8. MAIN GATE
9. COUNTY OF SAN DIEGO ENTRANCE MONUMENT
10. PROPERTY LINE (6' HIGH CHAIN LINK FENCE) PER SDRSD M-06
11. FENCE (TYPE #1)
12. WARM UP TRACK
13. PUBLIC TRAIL
14. DRIVEWAY PER MODIFIED SDRSD G-14B
15. END PEELER POLE 20' FROM NORTHERLY PROPERTY LINE
16. WATER SPIGOT
17. FENCE (TYPE #2)

SITE PLAN LEGEND:

- PROPOSED STRUCTURE
- BIOFILTRATION & PLANTING AREA PER CIVIL
- CONCRETE PER CIVIL
- PROPERTY LINE
- FENCE (TYPE #1)
- FENCE (TYPE #2)
- WS - WATER SPIGOT - SEE CIVIL

SHEET: A 2.1.0

North

LICENSED ARCHITECT
WARREN W. SCOTT
C-011211
11.30.19
RENEWAL DATE
STATE OF CALIFORNIA

763 2nd Street
Suite 200
Encinitas California
92024
760.943.8180
www.wsaaia.com
WARREN SCOTT + ARCHITECTURE

DEPARTMENT OF PARKS AND RECREATION
COUNTY OF SAN DIEGO
5500 OVERLAND DRIVE, SUITE 410 SAN DIEGO, CALIFORNIA 92123

COUNTY OF SAN DIEGO PARKS AND RECREATION

NO.	REVISIONS	APPR.	DATE
Rev	Description		Date

DESIGNED BY: WSA
DRAWN BY: WSA
CHECKED BY: WSA
PROJECT MANAGER:

LAKESIDE EQUESTRIAN FACILITY
Area 2 - Site Plan

SCALE AS SHOWN | SHEET 45 OF 68
PROJ. NO. 1020367
FILE NO.

E:\OneDrive\WSA - Lakeside Equestrian Center\Construction Drawings\Area 2\Lakeside Equestrian Center_CD's_Area 2_General.WSA-1.rvt

FOR REDUCED PLANS
ORIGINAL SCALE IS IN INCHES

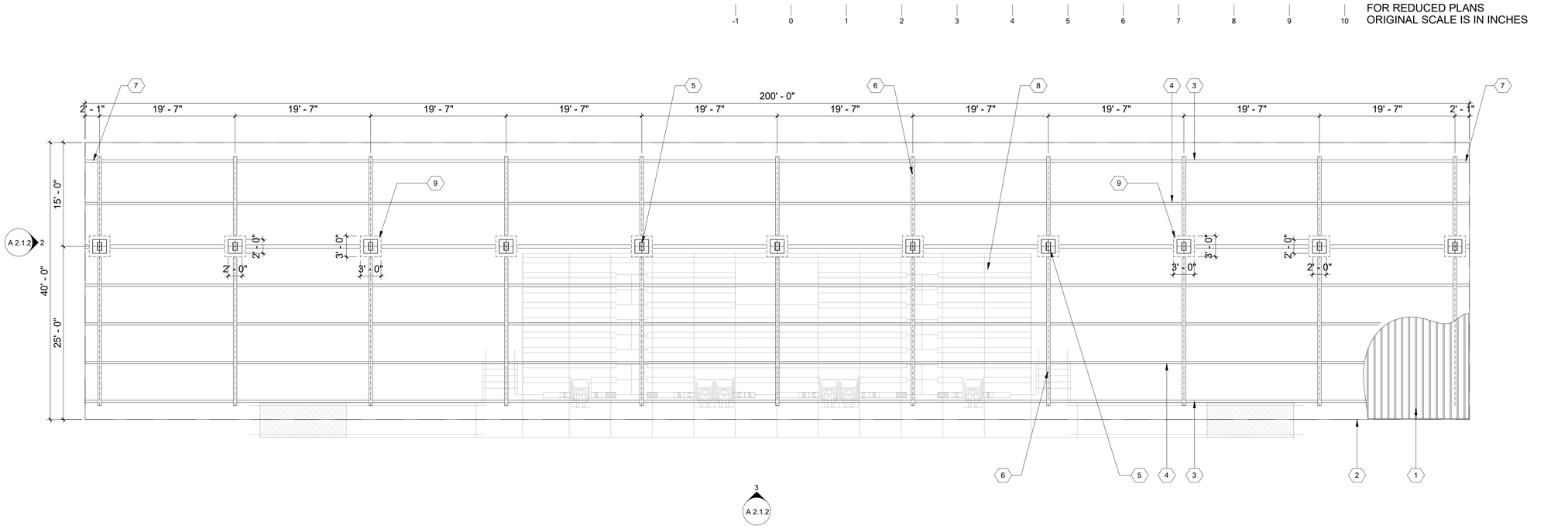

1 Floor Plan - Shade Structure
1/8" = 1'-0"

ROOF PLAN KEYNOTES:

1. 24 GA MULTI-RIB STEEL ROOF
2. 24 GA "J" CHANNEL
3. PERIMETER BEAMS
4. MID BEAMS
5. 14" X 8" STEEL COLUMN
6. RAFTER BEAM
7. EXTENSION BEAM
8. BLEACHERS BELOW
9. BLOCK & COBBLE STONE SURROUND - TYPICAL

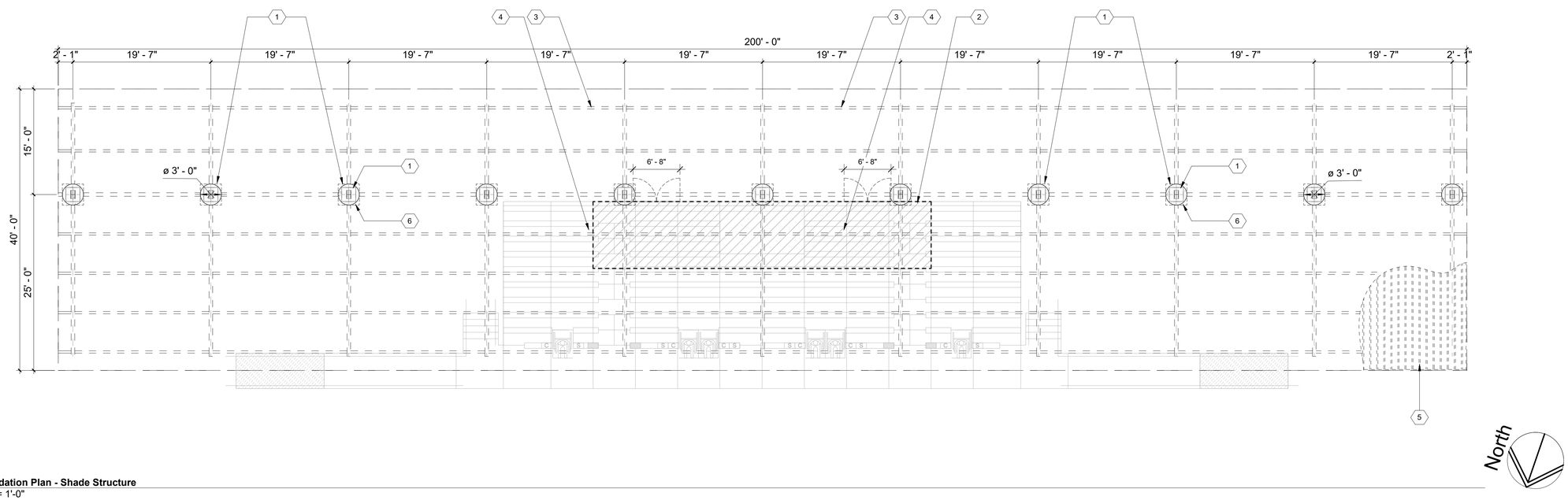

2 Foundation Plan - Shade Structure
1/8" = 1'-0"

FLOOR PLAN KEYNOTES:

1. 3'-0" DIAM X 12'-0" CONCRETE FOOTING
2. BLEACHERS STORAGE
3. ROOF STRUCTURE ABOVE
4. BLEACHERS
5. 14 X 6 STEEL COLUMN ABOVE
6. BLOCK & COBBLE STONE SURROUND - ABOVE

ISSUE FOR BID - 2/03/2020 NOT FOR CONSTRUCTION

SHEET: A 2.1.1

LICENSED ARCHITECT
WARREN W. SCOTT
C-011211
11.30.19
RENEWAL DATE
STATE OF CALIFORNIA

763 2nd Street
Suite 200
Encinitas California
92024
760.943.8180
www.wsaaia.com
WARREN SCOTT + ARCHITECTURE

DEPARTMENT OF PARKS AND RECREATION
COUNTY OF SAN DIEGO
5500 OVERLAND DRIVE, SUITE 410 SAN DIEGO, CALIFORNIA 92123

COUNTY OF SAN DIEGO PARKS AND RECREATION

NO.	REVISIONS	APPR.	DATE
Rev	Description		Date

DESIGNED BY: WSA
DRAWN BY: WSA
CHECKED BY: WSA
PROJECT MANAGER:

LAKESIDE EQUESTRIAN FACILITY
Floor Plan - Shade Structure

SCALE: AS SHOWN
PROJ. NO. 1020367
FILE NO.
SHEET 46 OF 68

E:\OneDrive\WSA - Lakeside Equestrian Center\Construction Drawings\Area 2\Lakeside Equestrian Center_CD-1_Area-2_General\WSA-1.rvt

FOR REDUCED PLANS
ORIGINAL SCALE IS IN INCHES

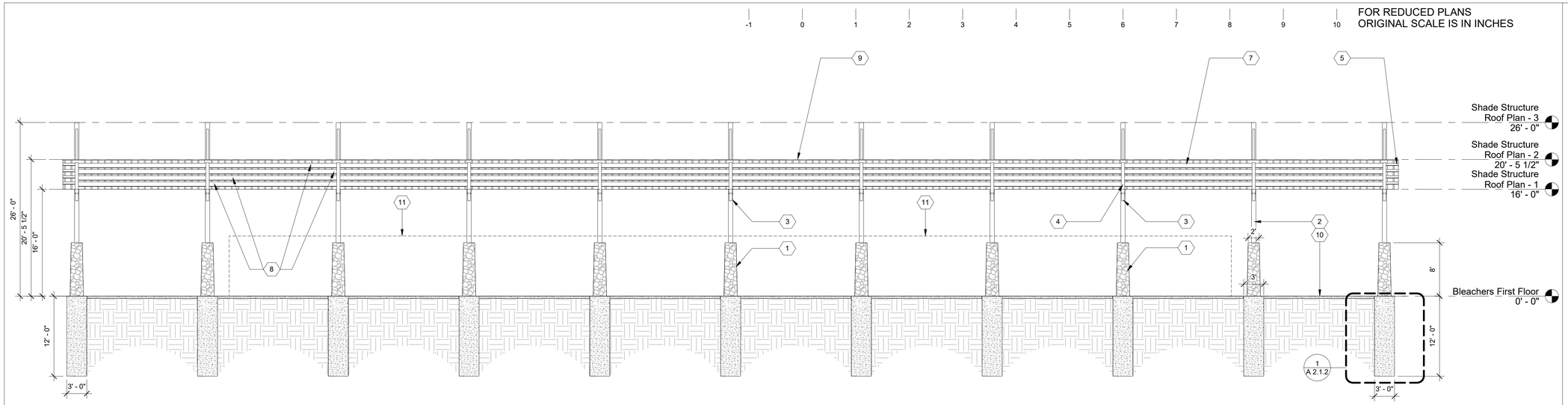

3 **Elevation A - Shade Structure**
1/8" = 1'-0"

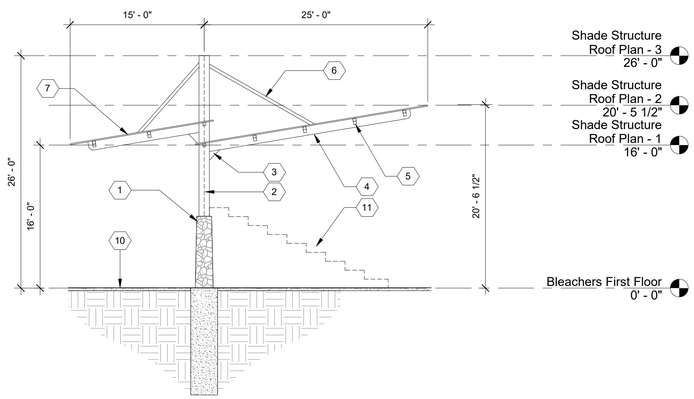

2 **Elevation B - Shade Structure**
1/8" = 1'-0"

ADJUST FTG. DEPTH FOR
LOCAL FROST CONDITIONS

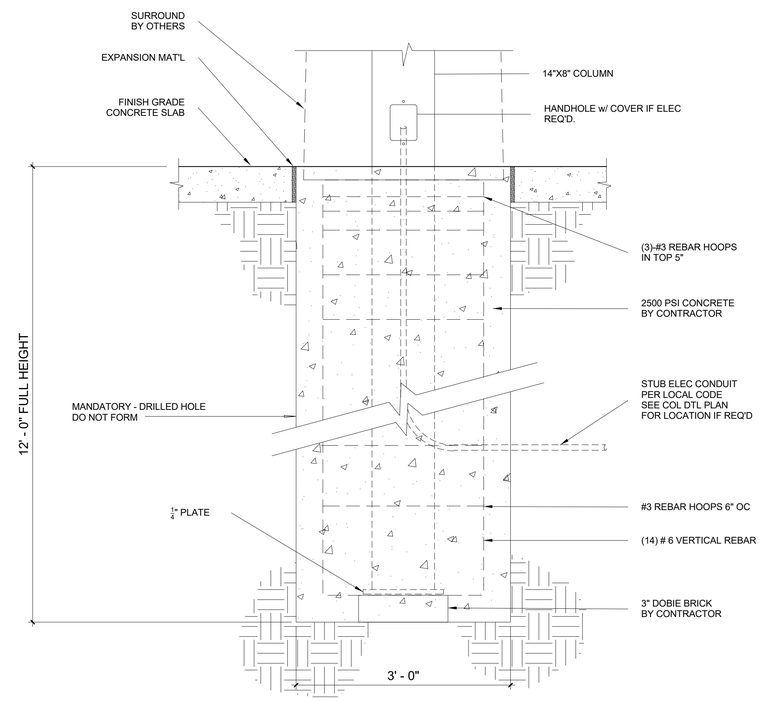

NON-EXPANSIVE,
UNDISTURBED OR 95%
COMPACTED SUBGRADE

1 **Direct Bury Caisson Footing**
1" = 1'-0"

ELEVATIONS KEYNOTES:

1. CMU & COBBLE STONE
2. 14" X 8" COLUMN
3. GUSSET
4. RAFTER BEAM
5. EXTENSION BEAM
6. SUPPORT
7. 24 GA. MULTI-RIB STEEL ROOF
8. MID BEAMS
9. PERIMETER BEAMS
10. SLAB-ON-GRADE
11. LINE OF BLEACHERS
12. 3'-0" DIAM X 12'-0" DEEP CONCRETE FOOTING

ISSUE FOR BID - 2/03/2020 NOT FOR CONSTRUCTION

SHEET: A 2.1.2

LICENSED ARCHITECT
WARREN W. SCOTT
C-011211
11.30.19
RENEWAL DATE
STATE OF CALIFORNIA

763 2nd Street
Suite 200
Encinitas California
92024
760.943.8180
www.wsaaia.com
WARREN SCOTT + ARCHITECTURE

DEPARTMENT OF PARKS AND RECREATION
COUNTY OF SAN DIEGO
5500 OVERLAND DRIVE, SUITE 410 SAN DIEGO, CALIFORNIA 92123

COUNTY OF SAN DIEGO PARKS AND RECREATION

NO.	REVISIONS	APPR.	DATE
Rev	Description		Date

DESIGNED BY: WSA
DRAWN BY: WSA
CHECKED BY: WSA
PROJECT MANAGER:

LAKESIDE EQUESTRIAN FACILITY
Elevations/ Sections - Shade Structure

SCALE: AS SHOWN
PROJ. NO. 1020367
FILE NO.
SHEET 47 OF 68

E:\OneDrive\WSA - Lakeside Equestrian Center\Construction Drawings\Area 2\Lakeside Equestrian Center_CD-1_Area-2_General\WSA-1.rvt

FOR REDUCED PLANS
ORIGINAL SCALE IS IN INCHES

-1 0 1 2 3 4 5 6 7 8 9 10

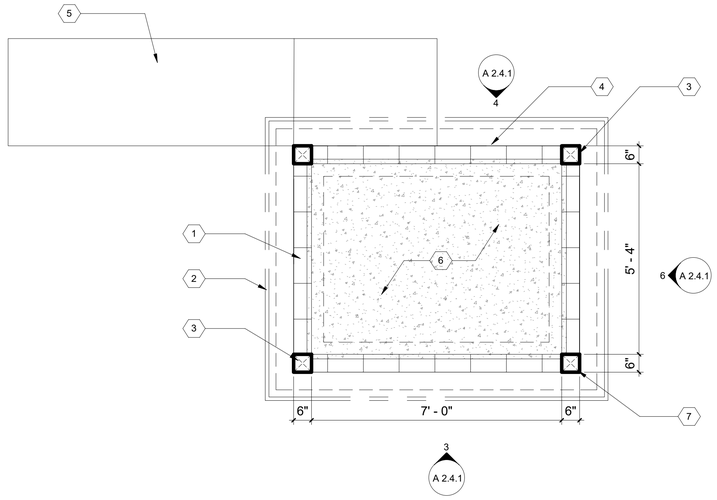

1 **Floor Plan - Viewing Box**
1/2" = 1'-0"

North

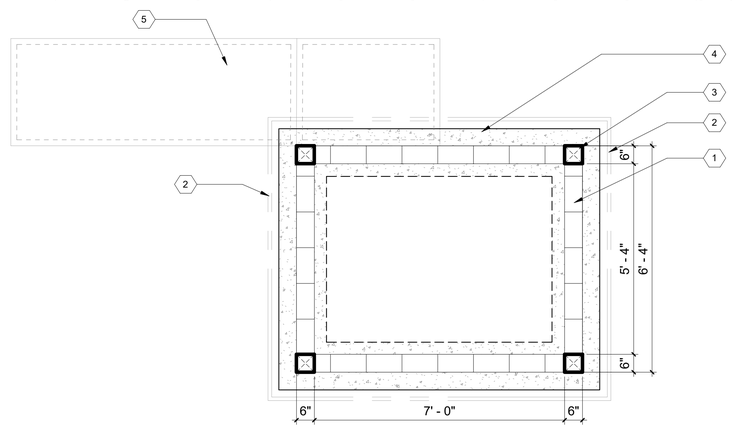

2 **Foundation Plan - Viewing Box**
1/2" = 1'-0"

North

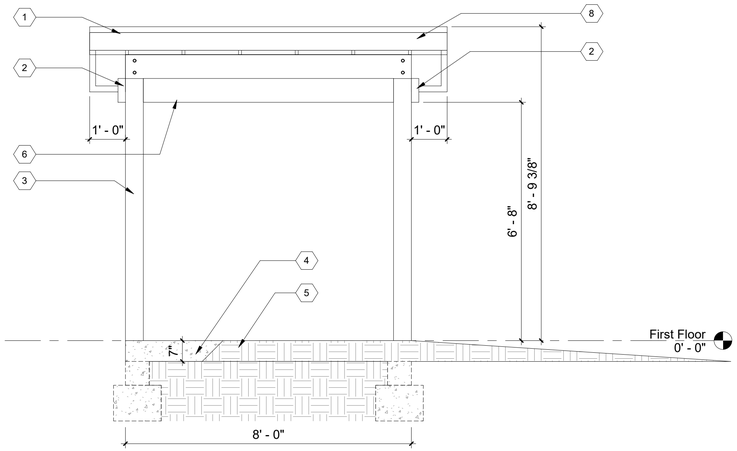

3 **Elevation A - Viewing Box**
1/2" = 1'-0"

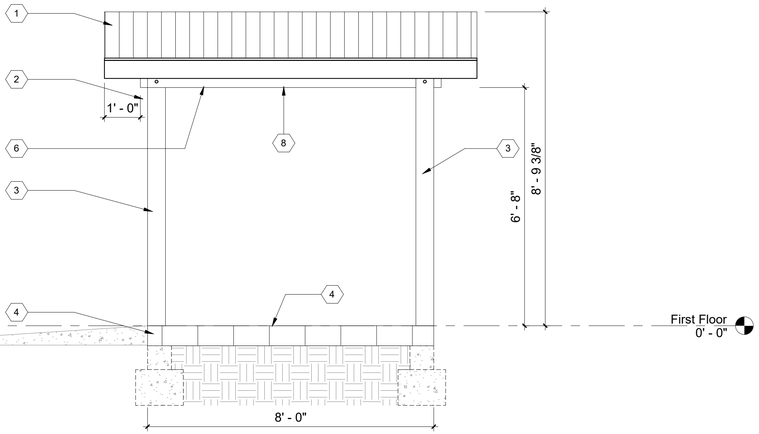

4 **Elevation 1 - d**
1/2" = 1'-0"

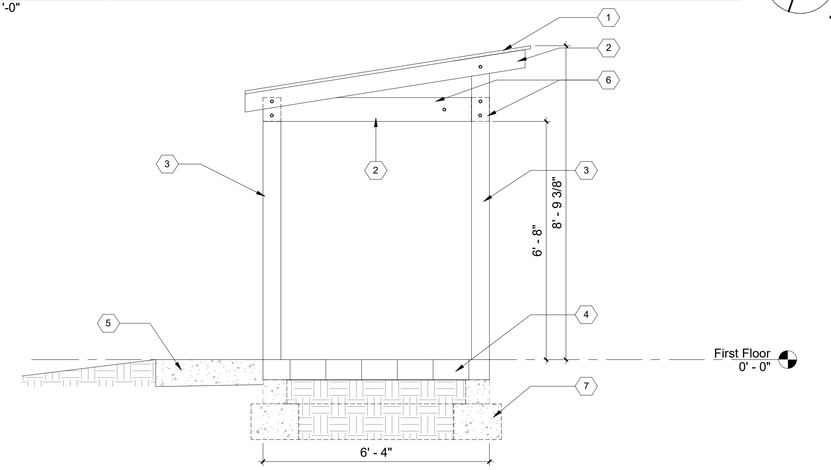

6 **Elevation 1 - a**
1/2" = 1'-0"

FLOOR PLAN KEYNOTES:

1. 8" X 16" SOLID BOTTOM BOND BEAM CAP
2. LINE OF ROOF ABOVE
3. 6" X 6" WOOD POSTS
4. 7" STEP TO GRADE
5. SLOPE GRADE (WALK TO LANDING) TO FFL
6. 4" CONCRETE SOG
7. LINE OF FOOTING BELOW

FOUNDATION PLAN KEYNOTES:

1. 8" X 16" CMU STEM WALL FULLY REINFORCED RUNNING BOND PATTERN
2. 12" X 16" CONCRETE FOUNDATION
3. 6 X 6 WOOD POSTS W/ SIMPSON BASE
4. 7" CONCRETE SLAB
5. WALK TO LANDING ABOVE

ELEVATIONS KEYNOTES:

1. METAL ROOF/ OAK 2 X 6 JOISTS @ 16 O.C. W/ 3/4 T&G PLYWOOD
2. 4" X 8" WOOD BEAM - STAINED
3. 6" X 6" WOOD POST - STAINED
4. 8" X 16" CMU STEM WALL - FULLY REINFORCED RUNNING BOND PATTERN
5. SLOPE GRADE (WALK TO LANDING)
6. 6" X 8" WOOD BEAM - STAINED
7. 12" X 16" CONCRETE FOUNDATION
8. PAINTED 2 X WOOD FASCIA BOARD

NOTE:

CONTRACTOR TO SUPPLY GALV. SIMPSON CONCEALED HARDWARE @ ALL BEAM CONNECTIONS

SHEET: A 2.4.1

LICENSED ARCHITECT
WARREN W. SCOTT
C-011211
11.30.19
RENEWAL DATE
STATE OF CALIFORNIA

763 2nd Street
Suite 200
Encinitas California
92024
760.943.8180
www.wsaaia.com

WARREN SCOTT + ARCHITECTURE

ISSUE FOR BID - 2/03/2020 NOT FOR CONSTRUCTION

E:\OneDrive\WSA\ - Lakeside Equestrian Center\Construction Drawings\Area 2\Lakeside Equestrian Center_CD's_Area 2_General\WSA1.rvt

DEPARTMENT OF PARKS AND RECREATION
COUNTY OF SAN DIEGO
5500 OVERLAND DRIVE, SUITE 410 SAN DIEGO, CALIFORNIA 92123

COUNTY OF SAN DIEGO PARKS AND RECREATION

NO.	REVISIONS	APPR.	DATE
Rev	Description		Date

DESIGNED BY: WSA
DRAWN BY: WSA
CHECKED BY: WSA
PROJECT MANAGER:

LAKESIDE EQUESTRIAN FACILITY

Details - Covered Viewing Box

SCALE: AS SHOWN
PROJ. NO.: 1020367
FILE NO.:
SHEET: 48 OF 68

-1 0 1 2 3 4 5 6 7 8 9 10

FOR REDUCED PLANS
ORIGINAL SCALE IS IN INCHES

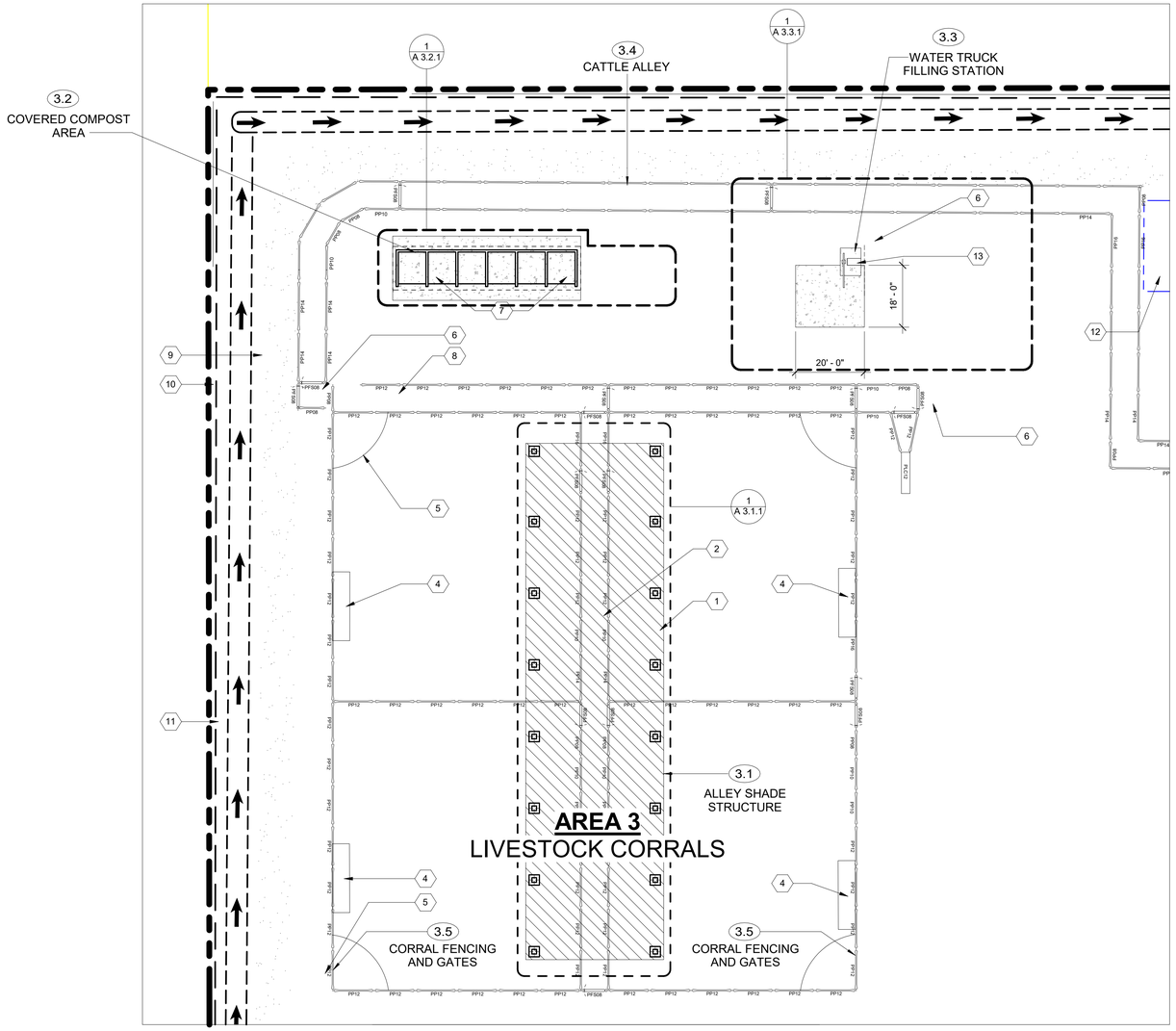

1 **Area 3 Site Plan**
1" = 20'-0"

INDEX OF SHEETS: AREA 3

ARCHITECTURAL
0.0 Title Sheet
A 0.0 Title Sheet - Area 3
3.0 Site Plan
A 3.0.0 Area 3 - Overall Site Plan
A 3.1.0 Area 3 - Site Plan
3.1 Shade Structure
A 3.1.1 Floor Plan/ Roof Plan - Coral Shade Structure
A 3.1.2 Elevations/ Sections - Coral Shade Structure
3.2 Compost Area
A 3.2.1 Floor Plan - Compost Area
A 3.2.2 Elevations - Compost Area
3.3 Water Truck Filling Station
A 3.3.1 Details - Water Truck Filling Station

AREA 3 LIVESTOCK CORRALS

NO.	STRUCTURES/ FEATURES
3.1	ALLEY SHADE STRUCTURE 40X150
3.2	COVERED COMPOST AREA 4 BINS
3.3	WATER TRUCK FILLING STATION
3.4	CATTLE ALLEY
3.5	CORRAL FENCING AND GATES

SITE PLAN KEYNOTES:

1. SHADE STRUCTURE
2. 10' WIDE ALLEY
3. FIRE ACCESS
4. 20' FEEDER (TYP.)
5. WATER TROUGH (TYP.) WITH AUTOMATIC FLOAT VALVE
6. WATER SPIGOT
7. COMPOST AREA 6 BINS WITH ROOF
8. STORM WATER
9. FENCE (TYPE #1)
10. FENCE (TYPE #2)
11. PROPERTY LINE (6' HIGH CHAIN LINK FENCE) PER SDRSD M-06
12. LANDSCAPE AREA
13. WATER TRUCK FILLING STATION

SITE PLAN LEGEND:

- PROPOSED STRUCTURE
- BIOFILTRATION & PLANTING AREA PER CIVIL
- CONCRETE PER CIVIL
- PROPERTY LINE
- FENCE (TYPE #1)
- FENCE (TYPE #2)
- WS - WATER SPIGOT - SEE CIVIL

SHEET: A 3.1.0

North

LICENSED ARCHITECT
WARREN W. SCOTT
C-011211
11.30.19
RENEWAL DATE
STATE OF CALIFORNIA

763 2nd Street
Suite 200
Encinitas California
92024
760.943.8180
www.wsaaia.com
WARREN SCOTT + ARCHITECTURE

ISSUE FOR BID - 2/03/2020 NOT FOR CONSTRUCTION

DEPARTMENT OF PARKS AND RECREATION
COUNTY OF SAN DIEGO
5500 OVERLAND DRIVE, SUITE 410 SAN DIEGO, CALIFORNIA 92123
COUNTY OF SAN DIEGO PARKS AND RECREATION

NO.	REVISIONS	APPR.	DATE
Rev	Description		Date

DESIGNED BY: WSA
DRAWN BY: WSA
CHECKED BY: WSA
PROJECT MANAGER: IESZIC FORMELLER

LAKESIDE EQUESTRIAN FACILITY
Area 3 - Site Plan

SCALE AS SHOWN | SHEET 49
PROJ. NO. 1020367 | OF
FILE NO. | 68

E:\ArcDrive\WSA - Lakeside Equestrian Center\Construction Drawings\Area 3\Lakeside Equestrian Center_CD-1_Area 3-WSA-1.rvt

FOR REDUCED PLANS
ORIGINAL SCALE IS IN INCHES

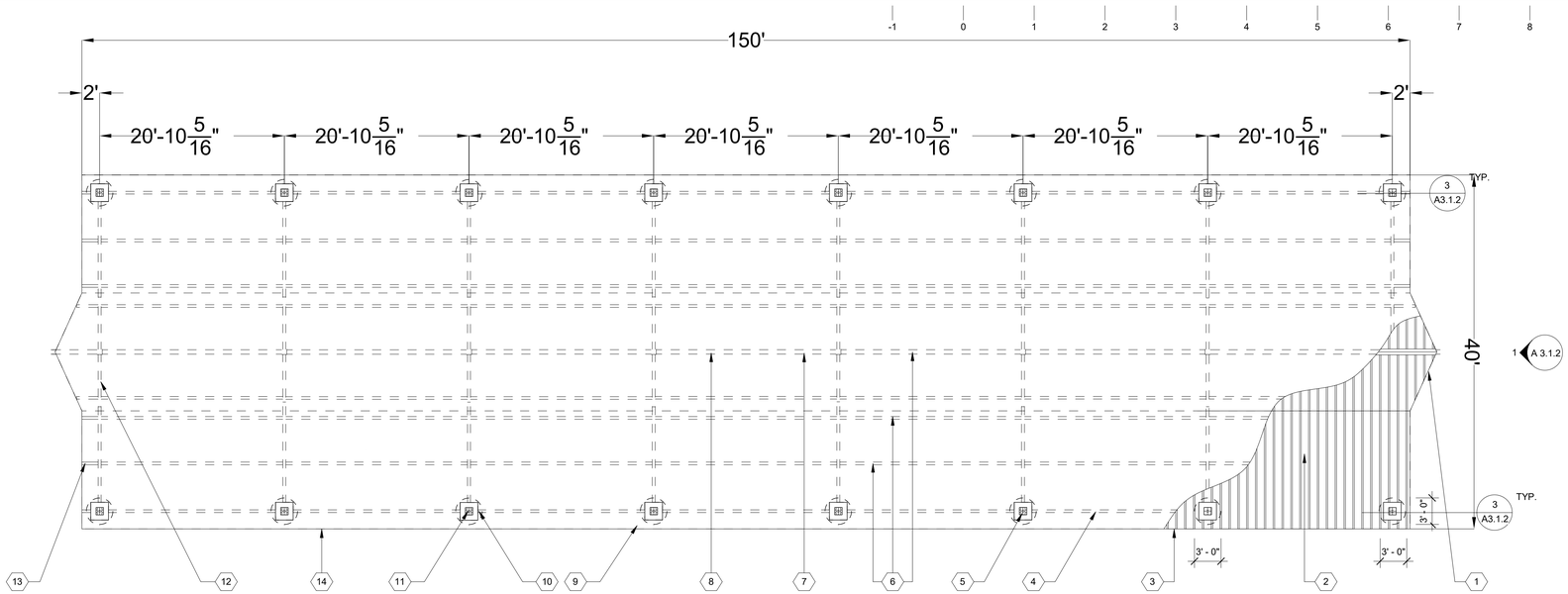

2 **Shade Structure Foundation Plan**
1/8" = 1'-0"

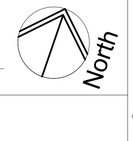

ROOF PLAN KEYNOTES:

1. 2nd TIER
2. 24 GA MULTI-RIB STEEL ROOF
3. 24 GA "J" CHANNEL
4. PERIMETER BEAMS
5. CENTER OF ELEC CONDUIT IF REQUIRED
6. MID BEAMS
7. CENTER OF FTG. A-BOLT & COLUMN
8. RIDGE BEAM
9. COMPRESSION RING
10. SURROUNDS CMU & COBBELSTONE
11. 10" X 6" COLUMN
12. RAFTER BEAM
13. EXTENSION BEAM
14. ROOF LINE
15. 3' -0" DIA. x 2' - 0" DEEP CONC. FOOTING

ISSUE FOR BID - 2/03/2020 NOT FOR CONSTRUCTION

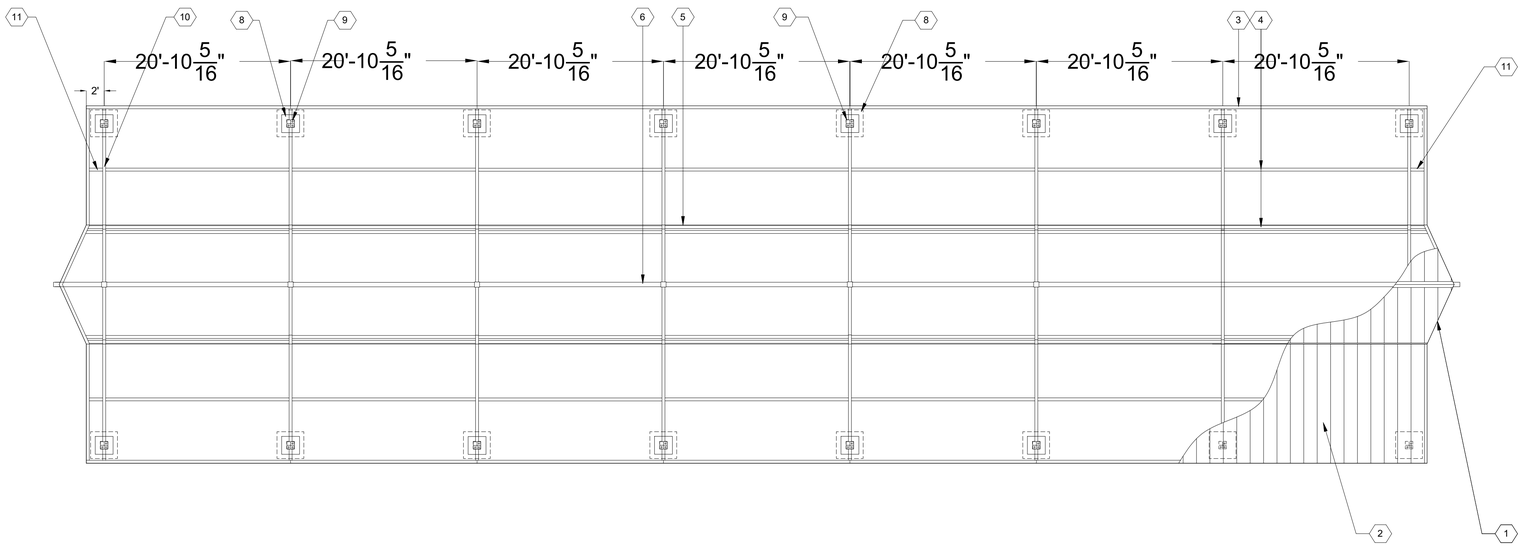

1 **Shade Structure Roof Plan**
1/8" = 1'-0"



ROOF PLAN KEYNOTES:

1. 2nd TIER
2. 24GA 18" STANDING SEAM STEEL ROOF
3. FASCIA BEAM #1
4. MID BEAMS
5. FASCIA BEAM #2
6. RIDGE BEAM
7. COMPRESSION RING
8. SURROUNDS CMU & COBBLESTONE
9. 10" X 10" COLUMN
10. RAFTER BEAM
11. EXTENSION BEAM

SHEET: A 3.1.1

LICENSED ARCHITECT
WARREN W. SCOTT
C-011211
11.30.19
RENEWAL DATE
STATE OF CALIFORNIA

763 2nd Street
Suite 200
Encinitas California
92024
760.943.8180
www.wsaala.com

WARREN SCOTT + ARCHITECTURE

DEPARTMENT OF PARKS AND RECREATION
COUNTY OF SAN DIEGO
5500 OVERLAND DRIVE, SUITE 410 SAN DIEGO, CALIFORNIA 92123

COUNTY OF SAN DIEGO PARKS AND RECREATION

NO.	REVISIONS	APPR.	DATE
Rev	Description		Date

DESIGNED BY:	WSA
DRAWN BY:	WSA
CHECKED BY:	WSA
PROJECT MANAGER:	IESZIC FORMELLER

LAKESIDE EQUESTRIAN FACILITY

Floor Plan/ Roof Plan - Coral
Shade Structure

SCALE	AS SHOWN
PROJ. NO.	1020367
FILE NO.	
SHEET	50
OF	68

E:\OneDrive\WSA - Lakeside Equestrian Center\Construction Drawings\Area 3\Lakeside Equestrian Center_CD-1_Area 3-WSA-1.rvt

FOR REDUCED PLANS
ORIGINAL SCALE IS IN INCHES

-1 0 1 2 3 4 5 6 7 8 9 10

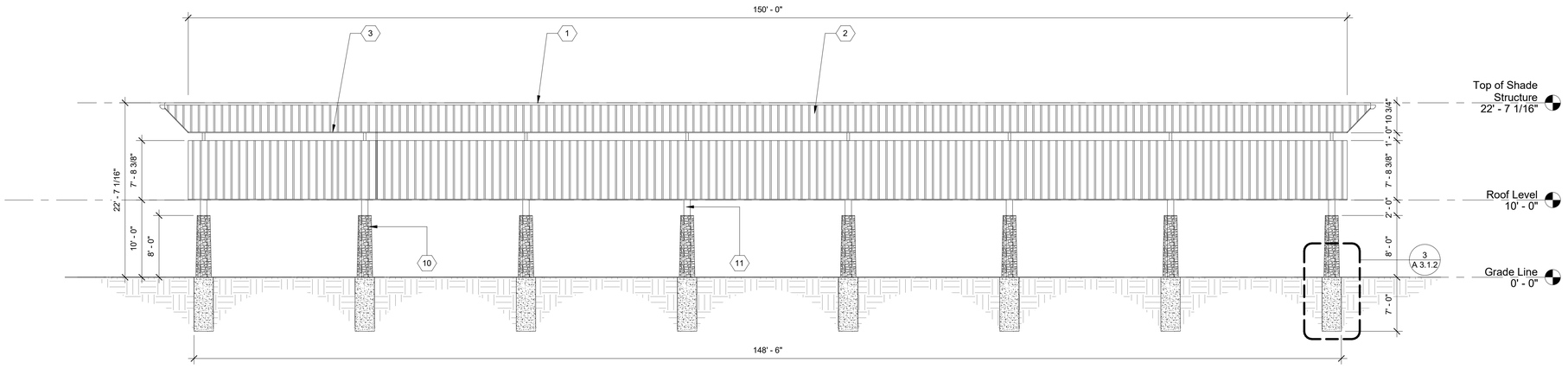

2 **Shade Structure Elevation-2**
1/8" = 1'-0"

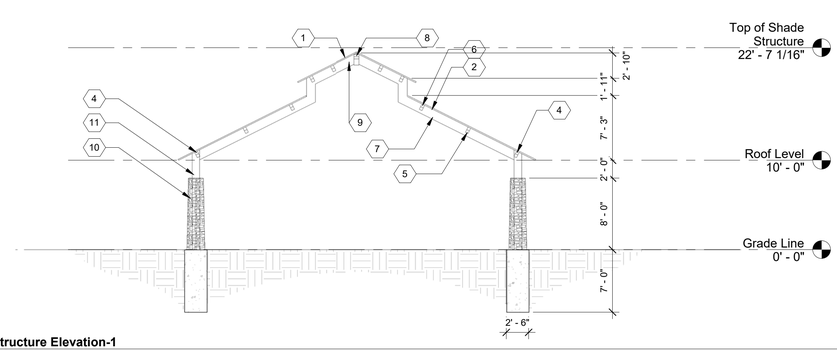

1 **Shade Structure Elevation-1**
1/8" = 1'-0"

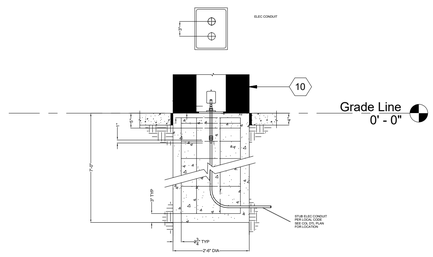
ELEC CONDUIT
10
Grade Line
0' - 0"
4'-0"
2'-0" TYP
2'-6" DIA
#3 @ 12" O.C. TYP
#5 VERT. CONT.
#5 HOOP
#5 @ 12" O.C. TYP
#5 @ 12" O.C. TYP
#5 VERT. CONT.
#5 HOOP
#5 @ 12" O.C. TYP
#5 @ 12" O.C. TYP
#5 @ 12" O.C. TY

-1 0 1 2 3 4 5 6 7 8 9 10

FOR REDUCED PLANS
ORIGINAL SCALE IS IN INCHES

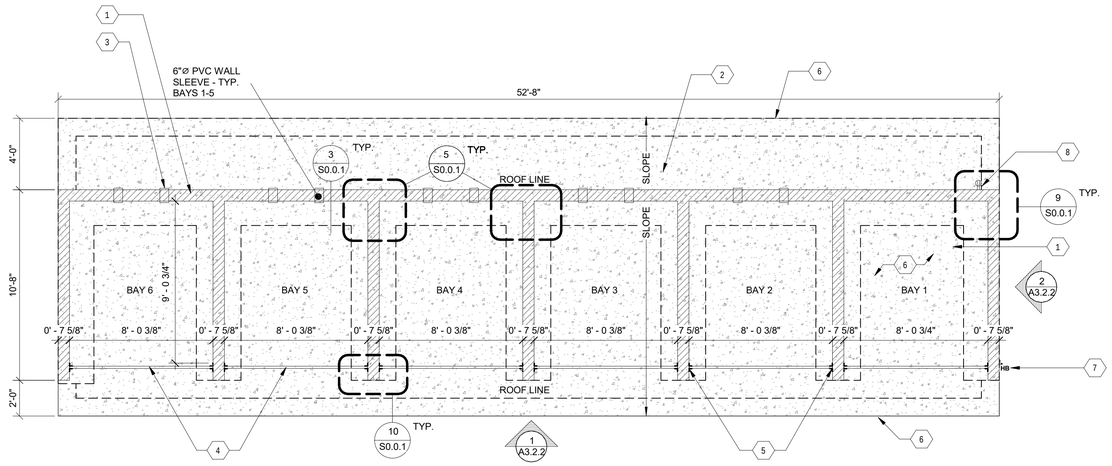

1 **Compost area Floor Plan**
1/4" = 1'-0"

WALL TYPE SCHEDULE

8" REINFORCED CONCRETE MASONRY BLOCK WALL WITH MORTAR JOINTS, GROUTED SOLID ALL CELLS RUNNING BOND PATTERN.

THESE PLAN VIEW AND ELEVATION DRAWINGS ARE A PRELIMINARY ARCHITECTURAL REPRESENTATION OF THE BUILDING. ALL DIMENSIONS, FEATURES AND COMPONENTS SHOWN ON THESE PRELIMINARY DRAWINGS MAY OR MAY NOT BE PART OF THE QUOTE. PLEASE REFER TO THE "SCOPE OF SUPPLY AND SERVICES" LETTER PROVIDED WITH YOUR QUOTE FOR ROMTEC'S PROPOSED SCOPE OF SUPPLY.

North

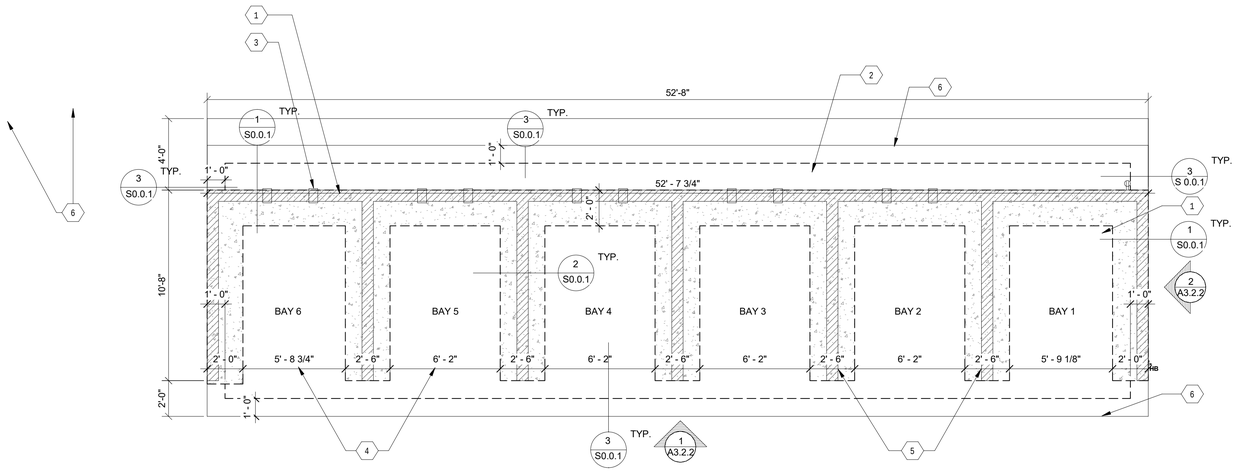

2 Compost area Foundation Plan

North

FLOOR PLAN KEYNOTES:

1. 8"X16" CMU CONCRETE BLOCK WALL RUNNING BOND PATTERN FULLY GROUTED AND REINFORCED - WALL HEIGHT 6'-6"
2. LINE OF ROOF - 10'-0" OPENING HEIGHT
3. 6" DIA. WALL SLEEVE, TYP. (2) PER BAY (EXCLUDE BAY 1)
4. 2X8 CEDAR SLAT (REMOVABLE), TYP. (10) PER BAY
5. STEEL ANGLE SLAT CHANNEL, TYP.(2) PER BAY
6. STEEL BEAM - TYPICAL
7. STEEL COLUMN - TYPICAL

COMPOST AREA NOTES:

1. COMPOST WALLS AND FLOORCONSTRUCTED OF CONCRETE.
2. STRUCTURAL AND ARCHITECTURAL DESIGN TO BE COMPLETED BY DESIGNER, INCLUDING ROOF AND GUTTERS.
3. ROOF RAINWATER CAPTURE RECOMMENDED.
4. CEILING SHALL BE SUFFICIENT HEIGHT TO ALLOW LOADER BUCKET TO DROP LOAD MATERIAL INTO THE BAYS.
5. LUMBER SHALL BE FSC CERTIFIED LUMBER AND INSECT AND ROT RESISTANT, SUCH AS REDWOOD OR CEDAR.
6. LUMBER SHALL BE SUITABLE FOR LOAD BEARING USE.
7. LUMBER SHALL NOT BE TREATED WITH PRESERVATIVES.
8. LUMBER SHALL BE STRAIGHT, SHALL NOT BE DEFORMED.
9. INSTALL 4-GANG OUTDOOR RECEPTACLE ON COMPOST REAR WALL WITH ITS OWN CIRCUIT WITH BREAKER.
10. CONTRACTOR TO INSTALL 5' LONG POWER CORD AND PLUG TO THE FAN MOTOR IN ACCORDANCE WITH THE MOTOR MANUFACTURER'S WIRING INSTRUCTIONS AND MOTOR SPECS.
11. FAN AND PIPING EQUIPMENT TO BE PROCURED BY CONTRACTOR AND SECURED/STORED ONSITE FOR FUTURE INSTALLATION.

PVC PIPING LIST:

(1)	4"X4"	PVC MECHANICAL FLEXIBLE COUPLING
(10)	4"X10'	PVC ASTM D2729 SOLID SEWER AND DRAIN PIPE
(15)	4"X10'	HDPE ASTM F810 2-HOLE (120°) TRIPLEWALL PIPE
(9)	4"X4"X4"	PVC HUB X HUB X HUB TEE
(1)	4"X4"	PVC 90-DEGREE HUB X HUB ELBOW
(10)	4"X4"	PVC HUB X HUB COUPLING
(10)	4"	PVC SEWER AND DRAIN END CAPS
(10)	4" EQUAL	PVC SLIP X SLIP KNIFE VALVE, VALTERRA OR

FAN COMPONENTS

(1) CINCINNATI FAN - PB SERIES DIRECT DRIVE MODEL PB-8

(1) CAP ART-DNE ADJUSTABLE RECYCLE TIMER OR EQUAL

SHEET: A 3.2.1

ISSUE FOR BID - 2/03/2020 NOT FOR CONSTRUCTION

LICENSED ARCHITECT
WARREN W. SCOTT
C-011211
11.30.19
RENEWAL DATE
STATE OF CALIFORNIA

763 2nd Street
Suite 200
Encinitas California
92024
760.943.8180
www.wsaaia.com
WARREN SCOTT + ARCHITECTURE

DEPARTMENT OF PARKS AND RECREATION
COUNTY OF SAN DIEGO
5500 OVERLAND DRIVE, SUITE 410 SAN DIEGO, CALIFORNIA 92123

COUNTY OF SAN DIEGO PARKS AND RECREATION

NO.	REVISIONS	APPR.	DATE
Rev	Description		Date

DESIGNED BY: WSA
DRAWN BY: WSA
CHECKED BY: WSA
PROJECT MANAGER: IESZIC FORMELLER

LAKESIDE EQUESTRIAN FACILITY
Floor Plan - Compost Area

SCALE	SHEET
AS SHOWN	52
PROJ. NO.	OF
1020367	
FILE NO.	68

D:\OneDrive\WSA_Lakeside Equestrian Center\Construction Drawings\Area 3\Lakeside Equestrian Center_CD1_Area 3-WSA-1.rvt

-1 0 1 2 3 4 5 6 7 8 9 10

FOR REDUCED PLANS
ORIGINAL SCALE IS IN INCHES

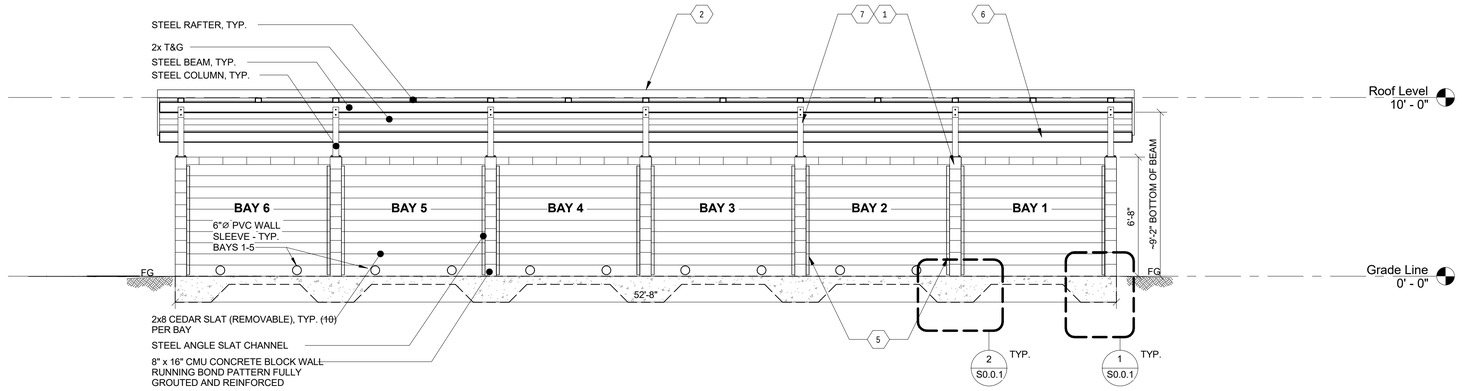

1 **Elevation 1 - a**
1/4" = 1'-0"

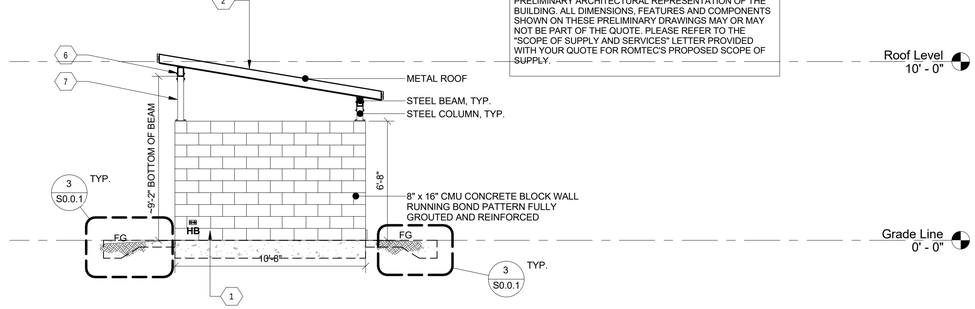

2 **Elevation 1 - b**
1/4" = 1'-0"

THESE PLAN VIEW AND ELEVATION DRAWINGS ARE A PRELIMINARY ARCHITECTURAL REPRESENTATION OF THE BUILDING. ALL DIMENSIONS, FEATURES AND COMPONENTS SHOWN ON THESE PRELIMINARY DRAWINGS MAY OR MAY NOT BE PART OF THE QUOTE. PLEASE REFER TO THE "SCOPE OF SUPPLY AND SERVICES" LETTER PROVIDED WITH YOUR QUOTE FOR ROMTEC'S PROPOSED SCOPE OF SUPPLY.

FLOOR PLAN KEYNOTES:

1. 8"X16" CMU CONCRETE BLOCK WALL RUNNING BOND PATTERN FULLY GROUTED AND REINFORCED - WALL HEIGHT 6'-6"
2. LINE OF ROOF - 10'-0" OPENING HEIGHT
3. 6" DIA. WALL SLEEVE, TYP. (2) PER BAY (EXCLUDE BAY 1)
4. 2X8 CEDAR SLAT (REMOVABLE), TYP. (10) PER BAY
5. STEEL ANGLE SLAT CHANNEL, TYP.(2) PER BAY
6. STEEL BEAM - TYPICAL
7. STEEL COLUMN - TYPICAL

COMPOST AREA NOTES:

1. COMPOST WALLS AND FLOORCONSTRUCTED OF CONCRETE.
2. STRUCTURAL AND ARCHITECTURAL DESIGN TO BE COMPLETED BY DESIGNER, INCLUDING ROOF AND GUTTERS.
3. ROOF RAINWATER CAPTURE RECOMMENDED.
4. CEILING SHALL BE SUFFICIENT HEIGHT TO ALLOW LOADER BUCKET TO DROP LOAD MATERIAL INTO THE BAYS.
5. LUMBER SHALL BE FSC CERTIFIED LUMBER AND INSECT AND ROT RESISTANT, SUCH AS REDWOOD OR CEDAR.
6. LUMBER SHALL BE SUITABLE FOR LOAD BEARING USE.
7. LUMBER SHALL NOT BE TREATED WITH PRESERVATIVES.
8. LUMBER SHALL BE STRAIGHT, SHALL NOT BE DEFORMED.
9. INSTALL 4-GANG OUTDOOR RECEPTACLE ON COMPOST REAR WALL WITH ITS OWN CIRCUIT WITH BREAKER.
10. CONTRACTOR TO INSTALL 5' LONG POWER CORD AND PLUG TO THE FAN MOTOR IN ACCORDANCE WITH THE MOTOR MANUFACTURER'S WIRING INSTRUCTIONS AND MOTOR SPECS.
11. FAN AND PIPING EQUIPMENT TO BE PROCURED BY CONTRACTOR AND SECURED/STORED ONSITE FOR FUTURE INSTALLATION.

ISSUE FOR BID - 2/03/2020 NOT FOR CONSTRUCTION

SHEET: A 3.2.2

LICENSED ARCHITECT
WARREN W. SCOTT
C-011211
11.30.19
RENEWAL DATE
STATE OF CALIFORNIA

763 2nd Street
Suite 200
Encinitas California
92024
760.943.8180
www.wsaaia.com

WARREN SCOTT + ARCHITECTURE

DEPARTMENT OF PARKS AND RECREATION
COUNTY OF SAN DIEGO
5500 OVERLAND DRIVE, SUITE 410 SAN DIEGO, CALIFORNIA 92123

COUNTY OF SAN DIEGO PARKS AND RECREATION

NO.	REVISIONS	APPR.	DATE
Rev	Description		Date

DESIGNED BY: WSA
DRAWN BY: WSA
CHECKED BY: WSA
PROJECT MANAGER: IESZIC FORMELLER

LAKESIDE EQUESTRIAN FACILITY
Elevations - Compost Area

SCALE: AS SHOWN
PROJ. NO.: 1020367
FILE NO.:
SHEET: 53 OF 68

D:\OneDrive\WSA - Lakeside Equestrian Center\Construction Drawings\4-ea Adjustable Equestrian Center_CD\1_Arch 3.1\WSA1.rvt

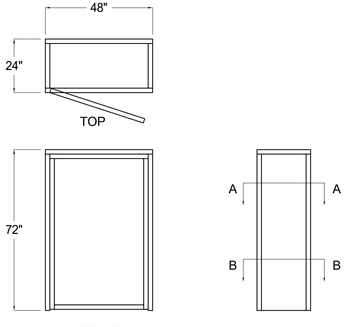

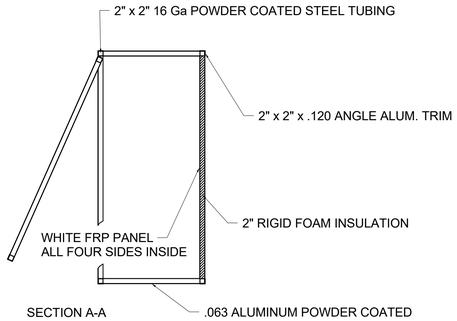

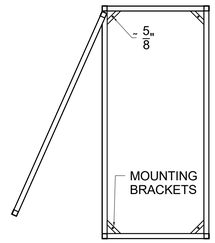

FOR REDUCED PLANS
ORIGINAL SCALE IS IN INCHES

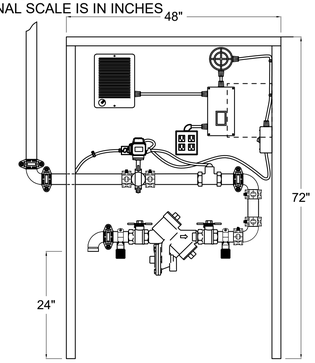

ISSUE FOR BID - 2/03/2020 NOT FOR CONSTRUCTION

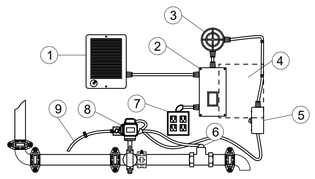

BILL OF MATERIALS		
ITEM	QUAN.	DESCRIPTION
1	1	HEATER
2	1	SUB PANEL
3	1	LIGHT
4	1	CUSTOMER INTERFACE
5	1	LIGHT SWITCH
6	1	FLOW SENSOR
7	1	RECEPTICLE
8	1	BUTTERFLY VALVE
9		1/2" LFMC

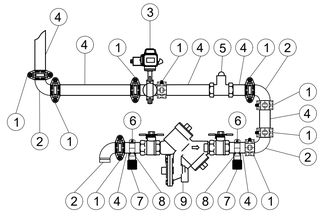

BILL OF MATERIALS		
ITEM	QUAN.	DESCRIPTION
1	9	CLAMP
2	4	ELBOW
3	1	BUTTERFLY VALVE
4		2" PIPE
5	5	FLOW SENSOR
6	2	UNISTRUT CLAMP
7	2	2 X 2 SQUARE TUBING
8	2	UNISTRUT
9	1	BACK FLOW

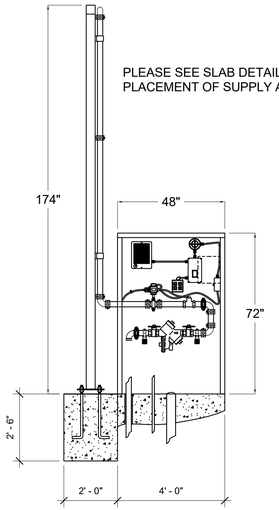

PLEASE SEE SLAB DETAILS FOR
PLACEMENT OF SUPPLY AND DRAIN.

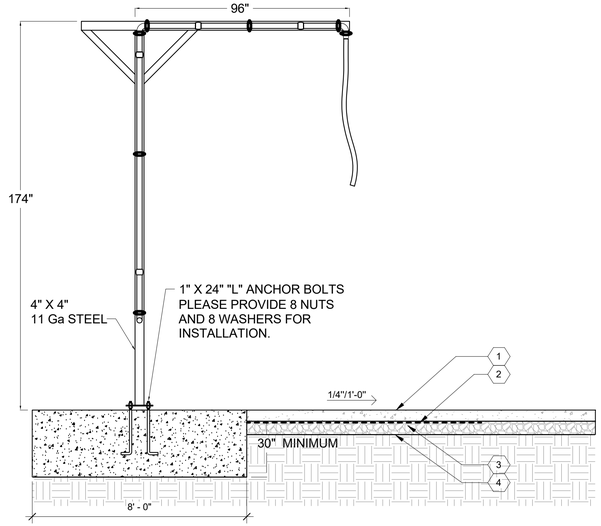

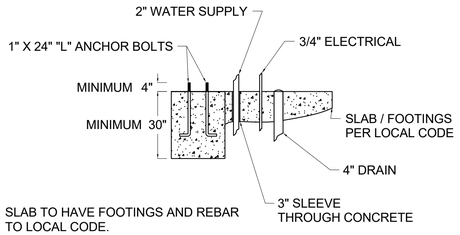

SLAB TO HAVE FOOTINGS AND REBAR TO LOCAL CODE.

SLAB UNDER OVERHEAD SUPPORT POST SHOULD BE A MINIMUM OF 30" - PLEASE CHECK WITH YOUR ENGINEER FOR THE APPROPRIATE DEPTH FOR YOUR SOIL CONDITIONS.

PLEASE SEE SLAB DETAILS FOR PLACEMENT OF SUPPLY AND DRAIN.

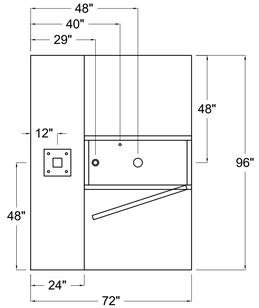

SLAB LAYOUT
1/2" = 1' - 0"

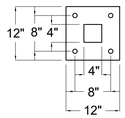

OVERHEAD SUPPORT POST
1" X 24" "L" ANCHOR LAYOUT
1" = 1' - 0"

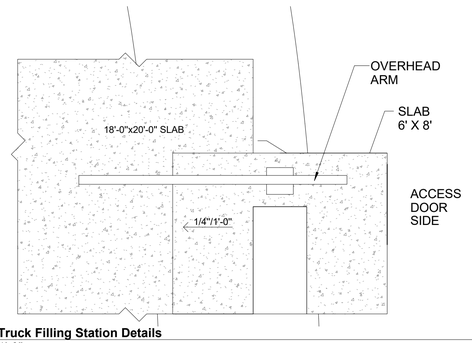

1 **Water Truck Filling Station Details**
3/8" = 1'-0"

DRAWING SCHEDULE 2" OVERHEAD		
PDF LABEL	DRAWING NUMBER	DRAWING NAME
A2O1	1 of 12	ENCLOSURE LAYOUT
A2O2	2 of 12	ENCLOSURE LAYOUT SECTION A-A
A2O3	3 of 12	ENCLOSURE LAYOUT SECTION B-B
A2O4	4 of 12	COMPONENT LAYOUT
A2O5	5 of 12	ELECTRICAL COMPNENTS
A2O6	6 of 12	PLUMBING COMPONENTS
A2O7	7 of 12	PLUMBING / ELECTRICAL
A2O8	8 of 12	OVERHEAD ARM DETAIL
A2O9	9 of 12	SLAB LAYOUT ELEVATION
A2O10	10 of 12	SLAB LAYOUT DETAIL
A2O11	11 of 12	SAMPLE SITE DRAWING
A2O12	12 of 12	DRAWING SCHEDULE

WATER TRUCK ELEVATION KEYNOTES:

1. 5" CONCRETE SLAB
2. GEOTEXTIL FABRIC
3. 6" ABREGATE BASE
4. COMPACTED SUBGRADE

SHEET: A 3.3.1

LICENSED ARCHITECT
WARREN W. SCOTT
C-011211
11.30.19
RENEWAL DATE
STATE OF CALIFORNIA

763 2nd Street
Suite 200
Encinitas California
92024
760.943.8180
www.wsaaia.com

WARREN SCOTT + ARCHITECTURE

DEPARTMENT OF PARKS AND RECREATION
COUNTY OF SAN DIEGO
5500 OVERLAND DRIVE, SUITE 410 SAN DIEGO, CALIFORNIA 92123

COUNTY OF SAN DIEGO PARKS AND RECREATION

NO.	REVISIONS	APPR.	DATE
Rev	Description		Date

DESIGNED BY: WSA
DRAWN BY: WSA
CHECKED BY: WSA
PROJECT MANAGER: IESZIC FORMELLER

LAKESIDE EQUESTRIAN FACILITY
Details - Water Truck Filling Station

SCALE: AS SHOWN
PROJ. NO.: 1020367
FILE NO.:
SHEET: 54 OF 68

© CivicDrive/WSA - Lakeside Equestrian Center\Construction Drawings\Area 3\Lakeside Equestrian Center_CD-1_Area 3-WSA-1.rvt

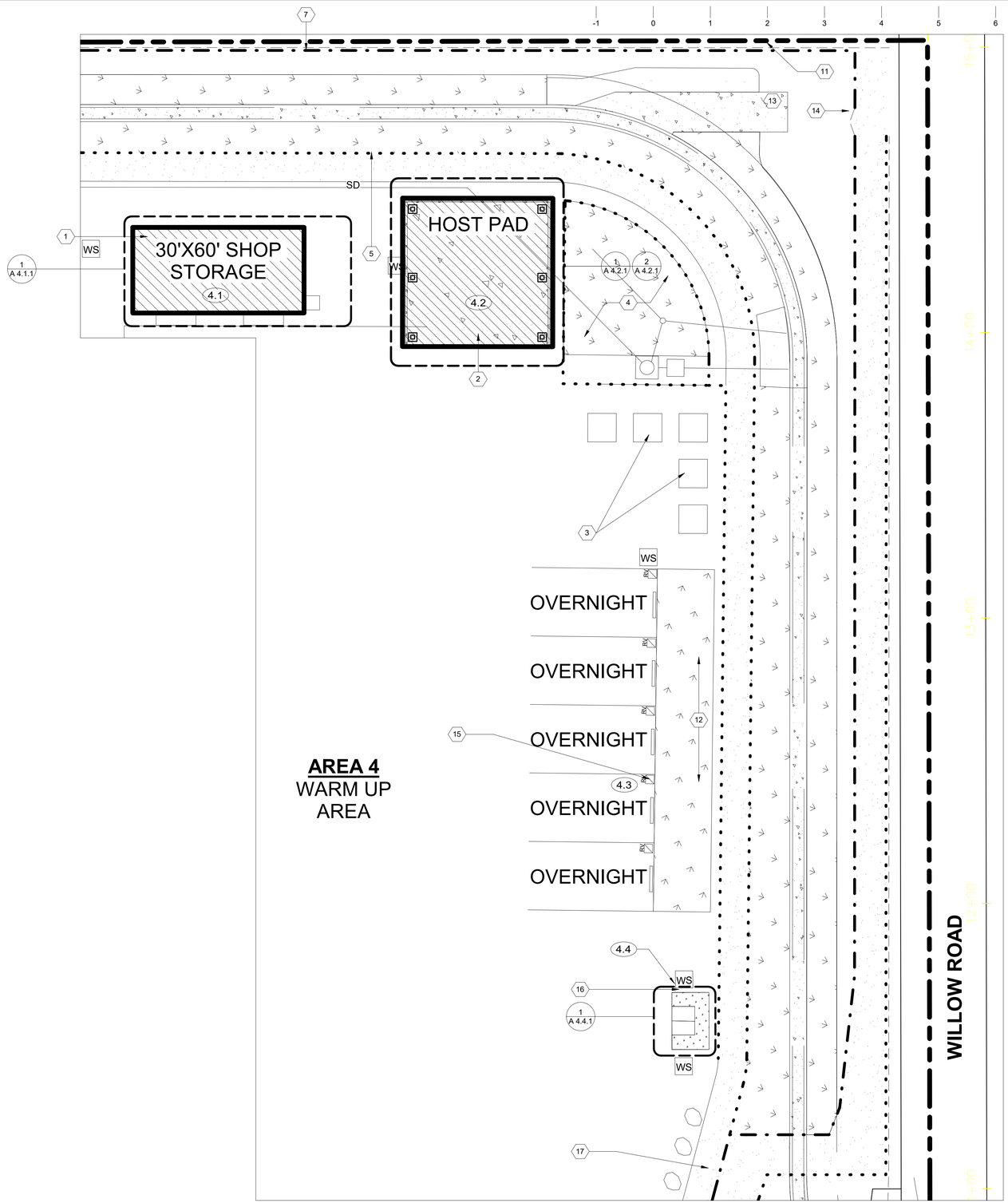

AREA 4
WARM UP AREA

1 **Area 4 Site Plan**
1" = 20'-0"

FOR REDUCED PLANS
ORIGINAL SCALE IS IN INCHES

INDEX OF SHEETS: AREA 4

ARCHITECTURAL
0.0 Title Sheet
A 0.0 Title Sheet - Area 4
4.0 Site Plan
A 4.0.0 Area 4 - Overall Site Plan
A 4.1.0 Area 4 - Site Plan
4.1 Shop Storage
A 4.1.1 Floor Plan/ Foundation Plan - Shop Storage
A 4.1.2 Shop Storage Elevations/ Sections
4.2 Host Pad Shade Structure
A 4.2.1 Floor Plan/ Foundation Plan - Host Pad Shade
A 4.2.2 Elevations/ Sections - Host Pad Shade
4.3 Rv Hook-Up
A 4.3.1 Details - Rv Hook-Up
4.4 Wash Racks
A 4.4.1 Details - Wash Racks

ELECTRICAL
Electrical
E 4.1.1 Standard Electrical Symbols and Abbreviations
E 4.1.2 Shop Storage Power and Lighting Plans

AREA 4 WARM UP AREA

NO.	STRUCTURES/ FEATURES
4.1	SHOP/ STORAGE 30X60
4.2	HOST PAD W/ SHADE STRUCTURE 50X50
4.3	RV HOOKUP CONNECTION (5 EA)
4.4	WASH RACKS 8X5 (2 EA.)

SITE PLAN KEYNOTES:

1. PROPOSED 30'X60' SHOP STORAGE
2. HOST PAD WITH BUILT IN SHADE STRUCTURE
3. APPROXIMATE LOCATION OF (5) 10'X10' CORRALS IN CONCRETE FOOTINGS
4. BIO FILTRATION BASIN
5. FENCE (TYPE #1)
6. WATER SPIGOT
7. FENCE (TYPE #2)
8. STORM WATER
9. FENCE (TYPE #2)
10. SEWER
11. PROPERTY LINE
12. PLANTING AREA
13. ACCESS AREA
14. MAINTENANCE GATE PER SDRSD M-05
15. RV HOOK-UP (TYP.) OF 5
16. (2) 8'X5' WASH RACKS W/5' VEGETATED STRIP
17. 10' WARM UP TRACK

SITE PLAN LEGEND:

- PROPOSED STRUCTURE
- BIOFILTRATION & PLANTING AREA PER CIVIL
- CONCRETE PER CIVIL
- PROPERTY LINE
- FENCE (TYPE #1)
- FENCE (TYPE #2)
- WS - WATER SPIGOT - SEE CIVIL

SHEET: A 4.1.0

North

LICENSED ARCHITECT
WARREN W. SCOTT
C-011211
11.30.19
RENEWAL DATE
STATE OF CALIFORNIA

763 2nd Street
Suite 200
Encinitas California
92024
760.943.8180
www.wsaala.com

WARREN SCOTT + ARCHITECTURE

ISSUE FOR BID - 2/03/2020 NOT FOR CONSTRUCTION

DEPARTMENT OF PARKS AND RECREATION
COUNTY OF SAN DIEGO
5500 OVERLAND DRIVE, SUITE 410 SAN DIEGO, CALIFORNIA 92123

COUNTY OF SAN DIEGO PARKS AND RECREATION

NO.	REVISIONS	APPR.	DATE
Rev	Description		Date

DESIGNED BY:	WSA
DRAWN BY:	WSA
CHECKED BY:	WSA
PROJECT MANAGER:	IESZIC FORMELLER

LAKESIDE EQUESTRIAN FACILITY
Area 4 - Site Plan

SCALE	AS SHOWN
PROJ. NO.	1020367
FILE NO.	
SHEET	55
OF	68

© DocuSigned by: 4 Lakeside Equestrian Center/Construction Drawings/area 4/Lakeside Equestrian Center_CD1_Area 4.rvt

FOR REDUCED PLANS
ORIGINAL SCALE IS IN INCHES

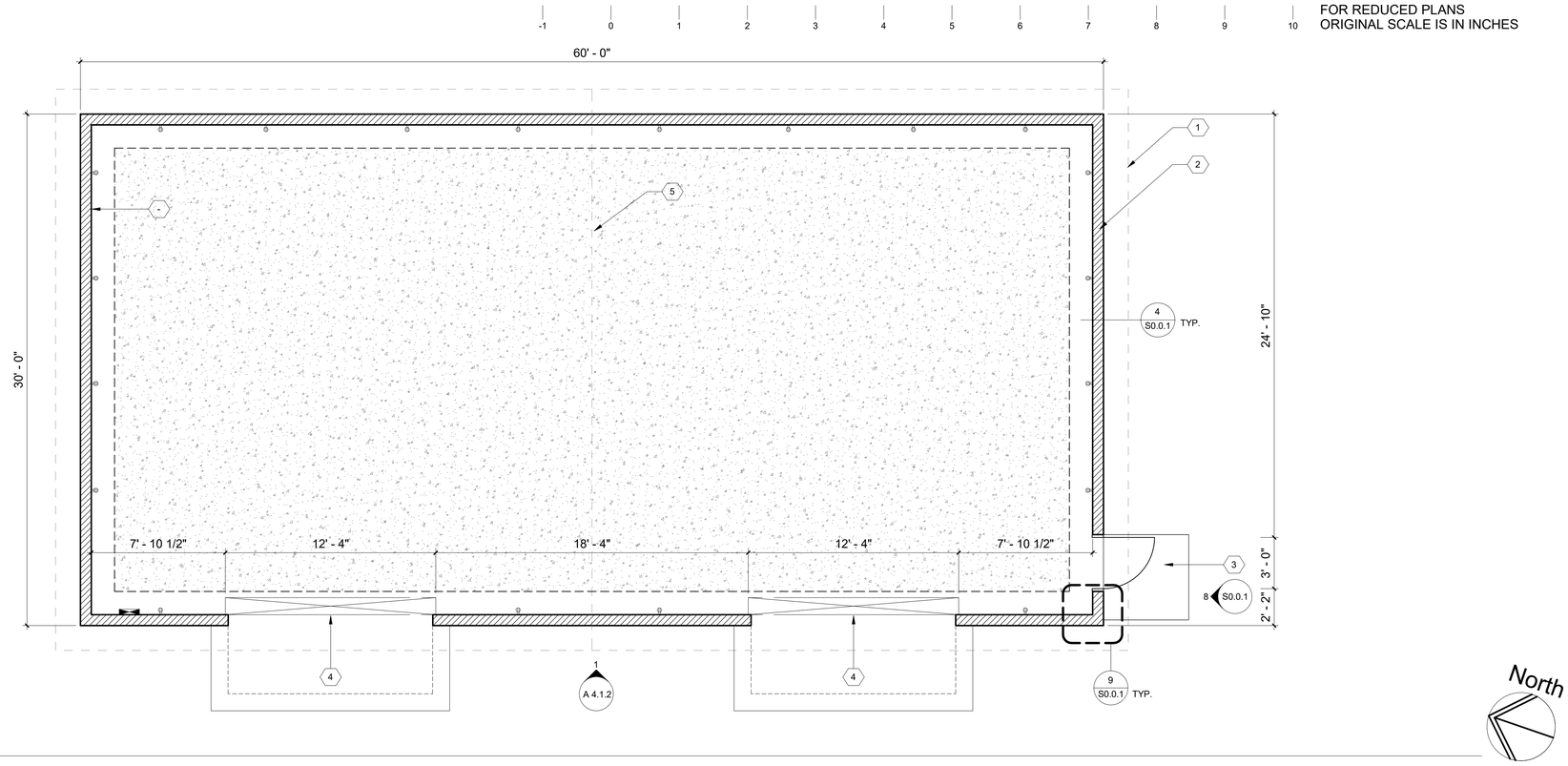

1 **Floor Plan - Shop Storage**
1/4" = 1'-0"

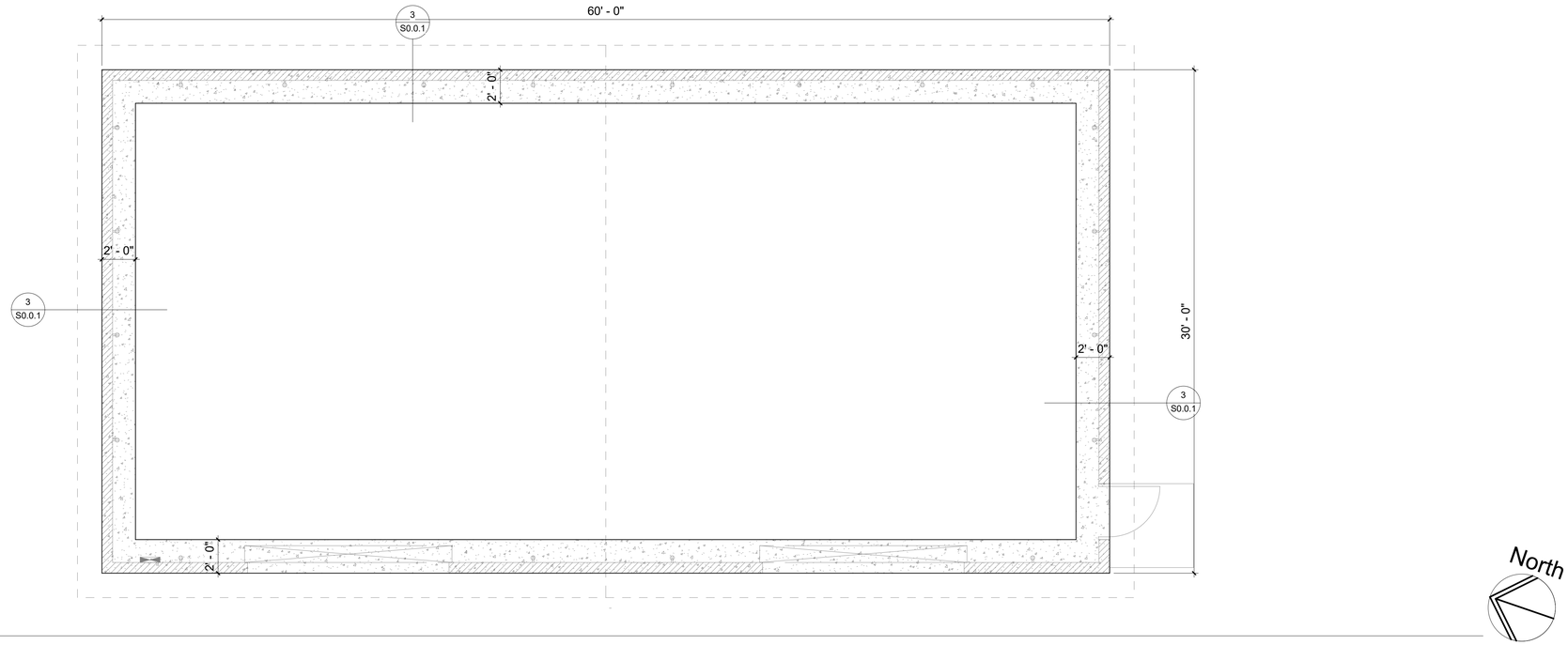

2 **Foundation Plan - Shop Storage**
1/4" = 1'-0"

FLOOR PLAN KEYNOTES:

1. METAL ROOF ABOVE.
2. 8" REINFORCED CONCRETE MASONRY BLOCK WALL WITH MORTAR JOINTS, GROUTED SOLID ALL CELLS RUNNING BOND PATTERN.
3. CONCRETE WALK BY INSTALLER
4. 12'-0" X 12'-0" ROLL-UP DOOR, TYP. (2)
5. ROOF RIDGE
6. 5" CONC. SLAB ON GRADE

WALL TYPE SCHEDULE:

- 8" REINFORCED CONCRETE MASONRY BLOCK WALL WITH MORTAR JOINTS, GROUTED SOLID ALL CELLS RUNNING BOND PATTERN.

ISSUE FOR BID - 2/03/2020 NOT FOR CONSTRUCTION

SHEET: A 4.1.1

LICENSED ARCHITECT
WARREN W. SCOTT
C-011211
11.30.19
RENEWAL DATE
STATE OF CALIFORNIA

763 2nd Street
Suite 200
Encinitas California
92024
760.943.8180
www.wsaaia.com
WARREN SCOTT + ARCHITECTURE

DEPARTMENT OF PARKS AND RECREATION
COUNTY OF SAN DIEGO
5500 OVERLAND DRIVE, SUITE 410 SAN DIEGO, CALIFORNIA 92123

COUNTY OF SAN DIEGO PARKS AND RECREATION

NO.	REVISIONS	APPR.	DATE
Rev	Description		Date

DESIGNED BY: WSA
DRAWN BY: WSA
CHECKED BY: WSA
PROJECT MANAGER: IESZIC FORMELLER

LAKESIDE EQUESTRIAN FACILITY
Floor Plan/ Foundation Plan - Shop Storage

SCALE: AS SHOWN
PROJ. NO. 1020367
FILE NO.
SHEET 56 OF 68

E:\OneDrive\WSA - Lakeside Equestrian Center\Construction Drawings\Area 4\Lakeside Equestrian Center_CD-1_Area-4.rvt

FOR REDUCED PLANS
ORIGINAL SCALE IS IN INCHES

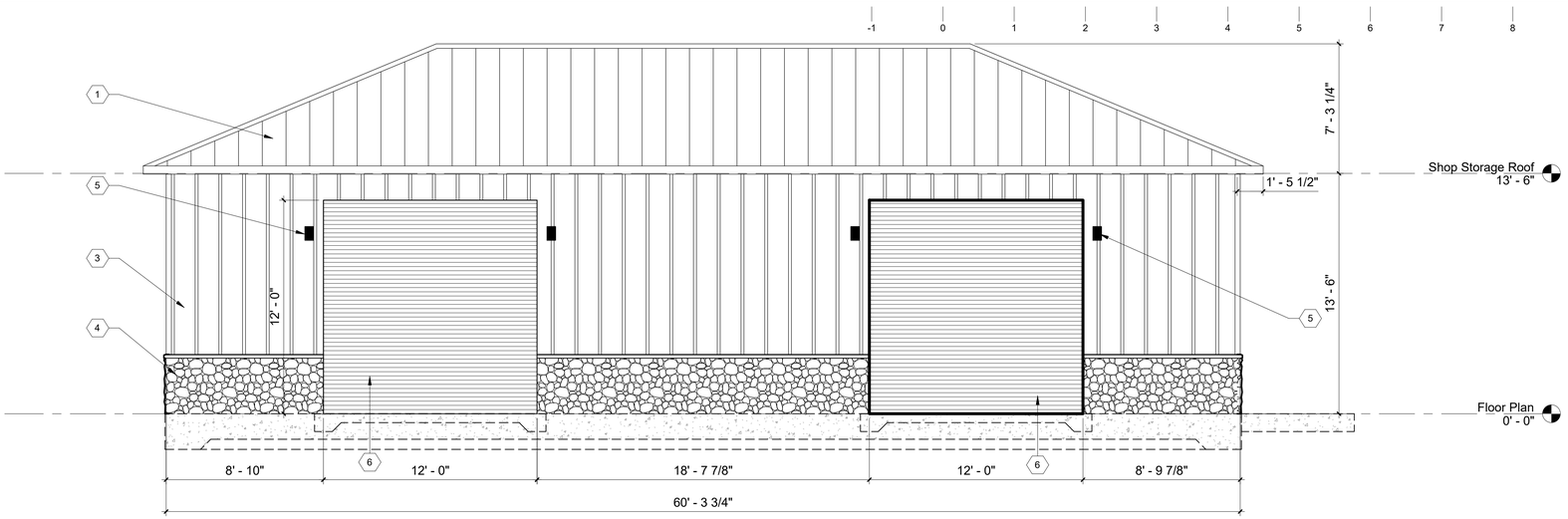

1 **Shop Storage Elevation C**
1/4" = 1'-0"

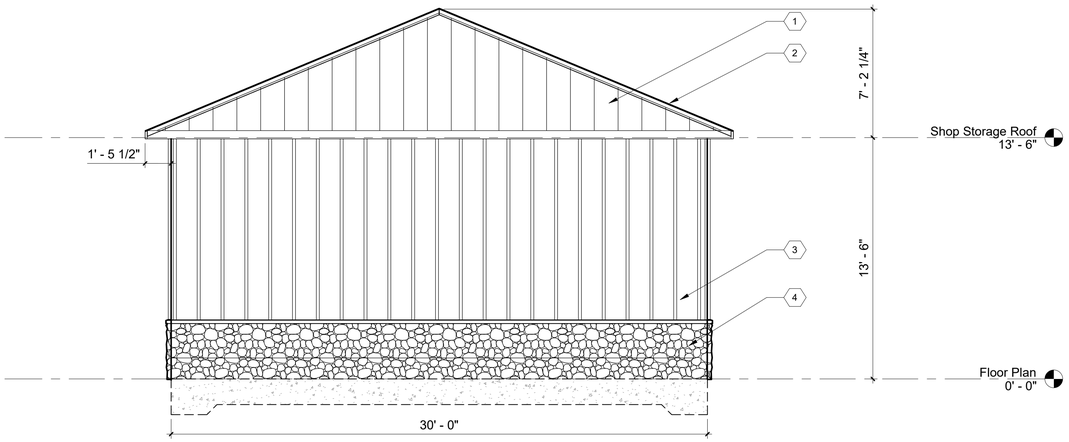

2 **Elevation 1 - c**
1/4" = 1'-0"

ELEVATIONS KEYNOTES:

1. METAL ROOF
2. FASCIA
3. CEDAR B&B SIDING OVER 8"X16" CMU CONCRETE BLOCK WALL RUNNING BOND PATTERN FULLY GROUTED AND REINFORCED
4. COBBLESTONE SIDING OVER 8"X16" CMU CONCRETE BLOCK WALL RUNNING BOND PATTERN FULLY GROUTED AND REINFORCED
5. WALL MOUNT LIGHT
6. ROLL UP DOOR

ELEVATIONS NOTES:

THESE PLAN VIEW AND ELEVATION DRAWINGS ARE A PRELIMINARY ARCHITECTURAL REPRESENTATION OF THE BUILDING. ALL DIMENSIONS, FEATURES AND COMPONENTS SHOWN ON THESE PRELIMINARY DRAWINGS MAY OR MAY NOT BE PART OF THE QUOTE. PLEASE REFER TO THE "SCOPE OF SUPPLY AND SERVICES" LETTER PROVIDED WITH YOUR QUOTE FOR ROMTEC'S PROPOSED SCOPE OF SUPPLY.

SHEET: A 4.1.2

ISSUE FOR BID - 2/03/2020 NOT FOR CONSTRUCTION

LICENSED ARCHITECT
WARREN W. SCOTT
C-011211
11.30.19
RENEWAL DATE
STATE OF CALIFORNIA

763 2nd Street
Suite 200
Encinitas California
92024
760.943.8180
www.wsaala.com

WARREN SCOTT + ARCHITECTURE

DEPARTMENT OF PARKS AND RECREATION
COUNTY OF SAN DIEGO
5500 OVERLAND DRIVE, SUITE 410 SAN DIEGO, CALIFORNIA 92123

COUNTY OF SAN DIEGO PARKS AND RECREATION

NO.	REVISIONS	APPR.	DATE
Rev	Description		Date

DESIGNED BY:	WSA
DRAWN BY:	WSA
CHECKED BY:	WSA
PROJECT MANAGER:	IESZIC FORMELLER

LAKESIDE EQUESTRIAN FACILITY
Shop Storage Elevations/ Sections

SCALE	AS SHOWN
PROJ. NO.	1020367
FILE NO.	
SHEET	57
OF	68

E:\OneDrive\WSA - Lakeside Equestrian Center\Construction Drawings\Arch 4 Lakeside Equestrian Center_CD 1_Arch 4.rvt

FOR REDUCED PLANS
ORIGINAL SCALE IS IN INCHES

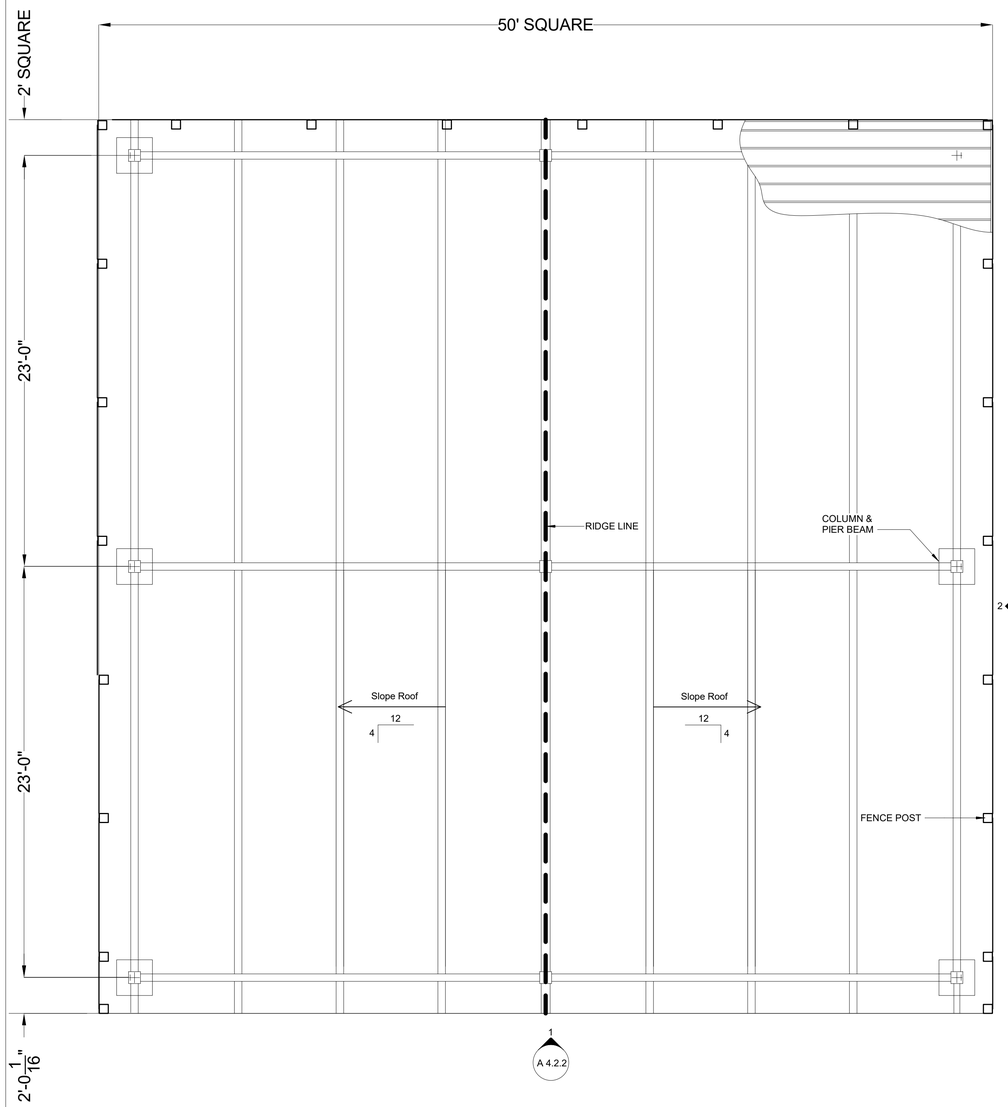

1 **Floor Plan - Host Pad Shade**
1/4" = 1'-0"

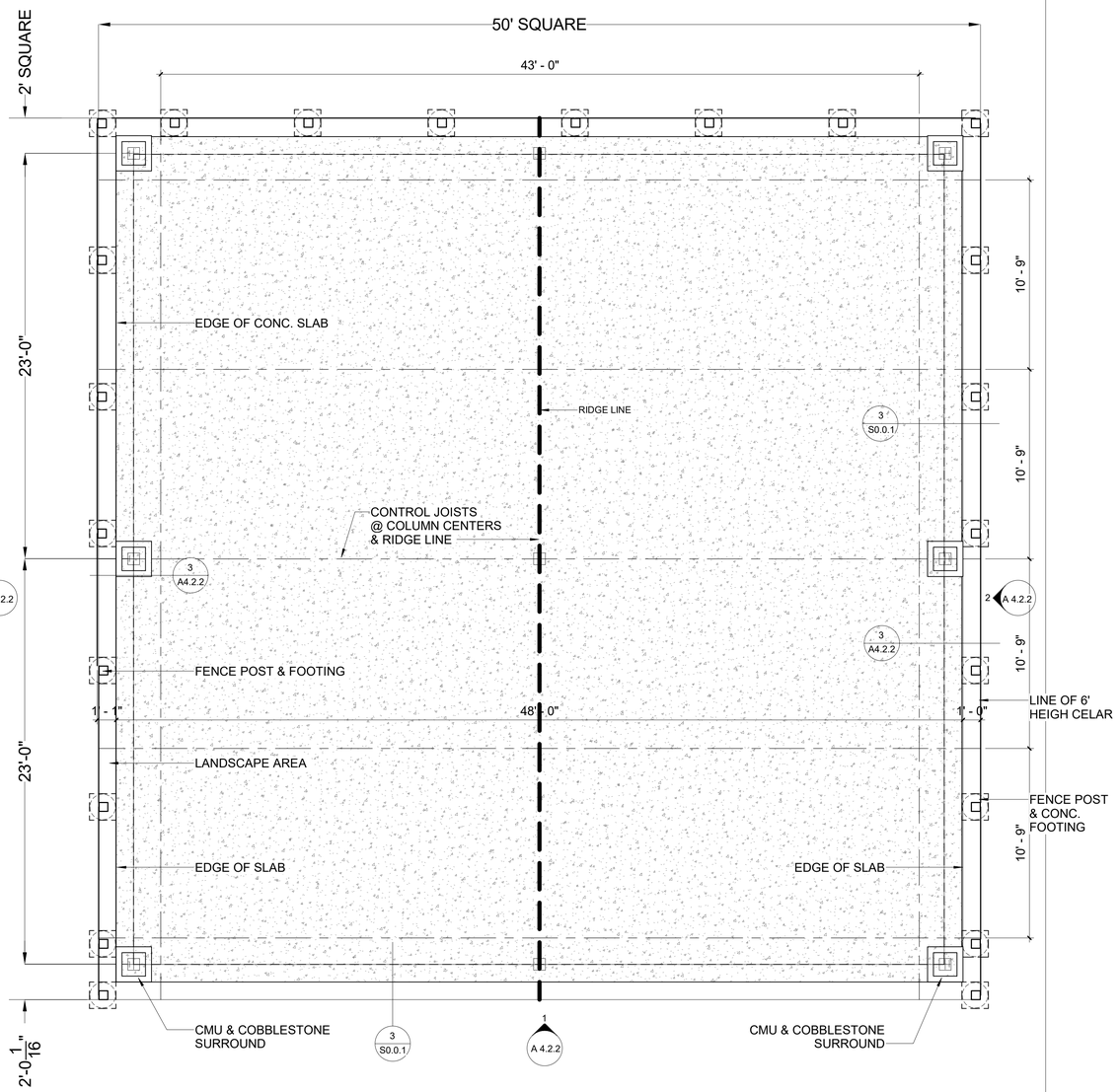

2 **Foundation Plan - Host Pad Shade**
1/4" = 1'-0"

North

North

SHEET: A 4.2.1

LICENSED ARCHITECT
WARREN W. SCOTT
C-011211
11.30.19
RENEWAL DATE
STATE OF CALIFORNIA

763 2nd Street
Suite 200
Encinitas California
92024
760.943.8180
www.wsaaia.com
WARREN SCOTT + ARCHITECTURE

ISSUE FOR BID - 2/03/2020 NOT FOR CONSTRUCTION

DEPARTMENT OF PARKS AND RECREATION
COUNTY OF SAN DIEGO
5500 OVERLAND DRIVE, SUITE 410 SAN DIEGO, CALIFORNIA 92123

COUNTY OF SAN DIEGO PARKS AND RECREATION

NO.	REVISIONS	APPR.	DATE
Rev	Description		Date

DESIGNED BY: WSA
DRAWN BY: WSA
CHECKED BY: WSA
PROJECT MANAGER: IESZIC FORMELLER

LAKESIDE EQUESTRIAN FACILITY
Floor Plan/ Foundation Plan - Host Pad Shade

SCALE: AS SHOWN
PROJ. NO. 1020367
FILE NO.
SHEET 58 OF 68

E:\OneDrive\WSA - Lakeside Equestrian Center\Construction Drawings\Area 4\Lakeside Equestrian Center_CD-1_Area-4.rvt

FOR REDUCED PLANS
ORIGINAL SCALE IS IN INCHES

ISSUE FOR BID - 2/03/2020 NOT FOR CONSTRUCTION

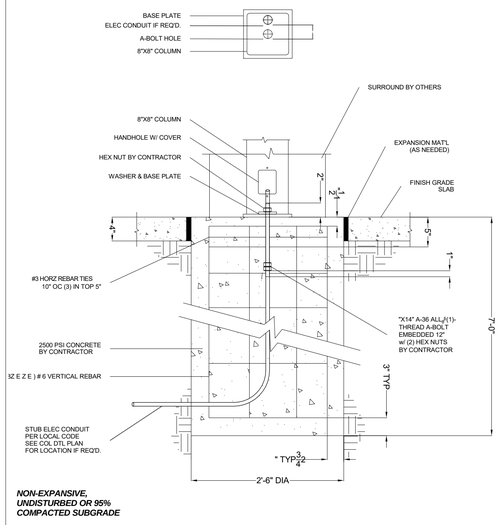

3 **1-BOLT SURFACE MOUNT CAISSON FOOTING**
1" = 1'-0"

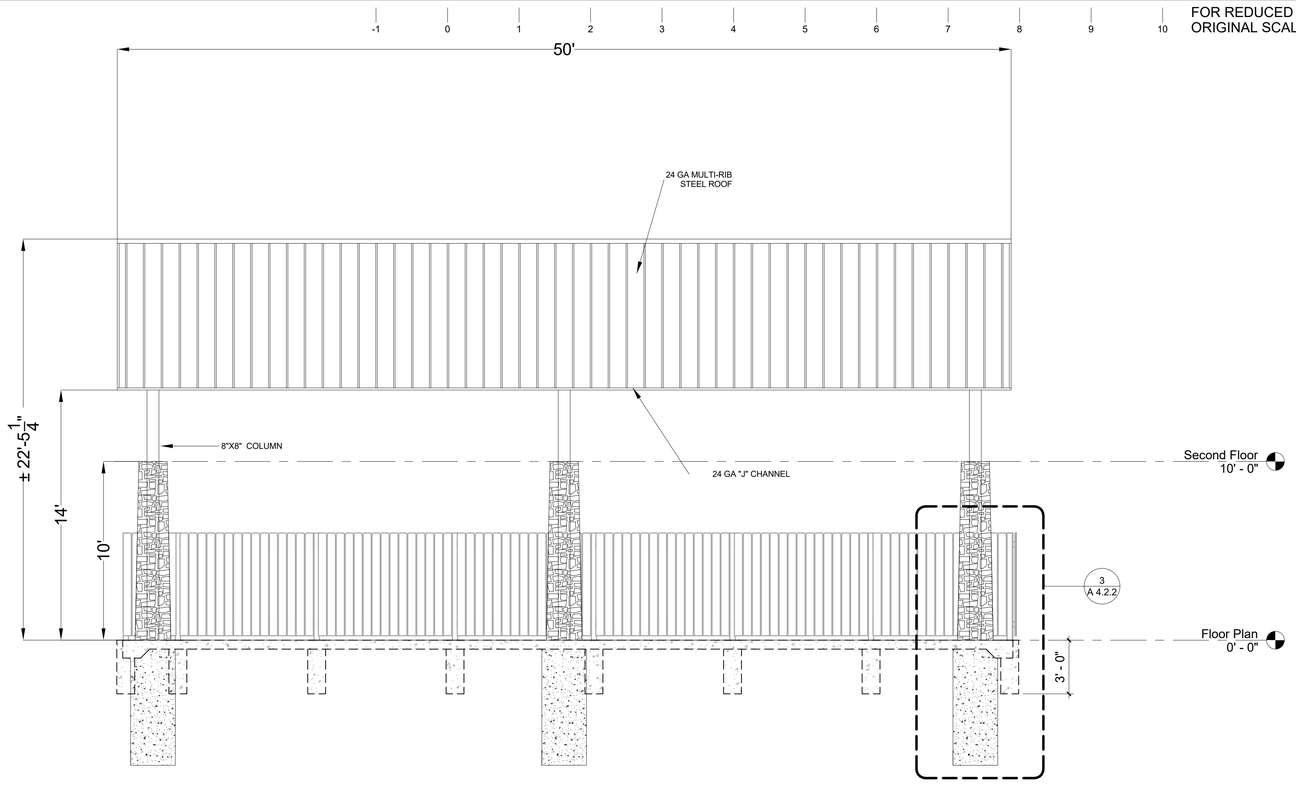

2 **Elevation 1 - d**
1/4" = 1'-0"

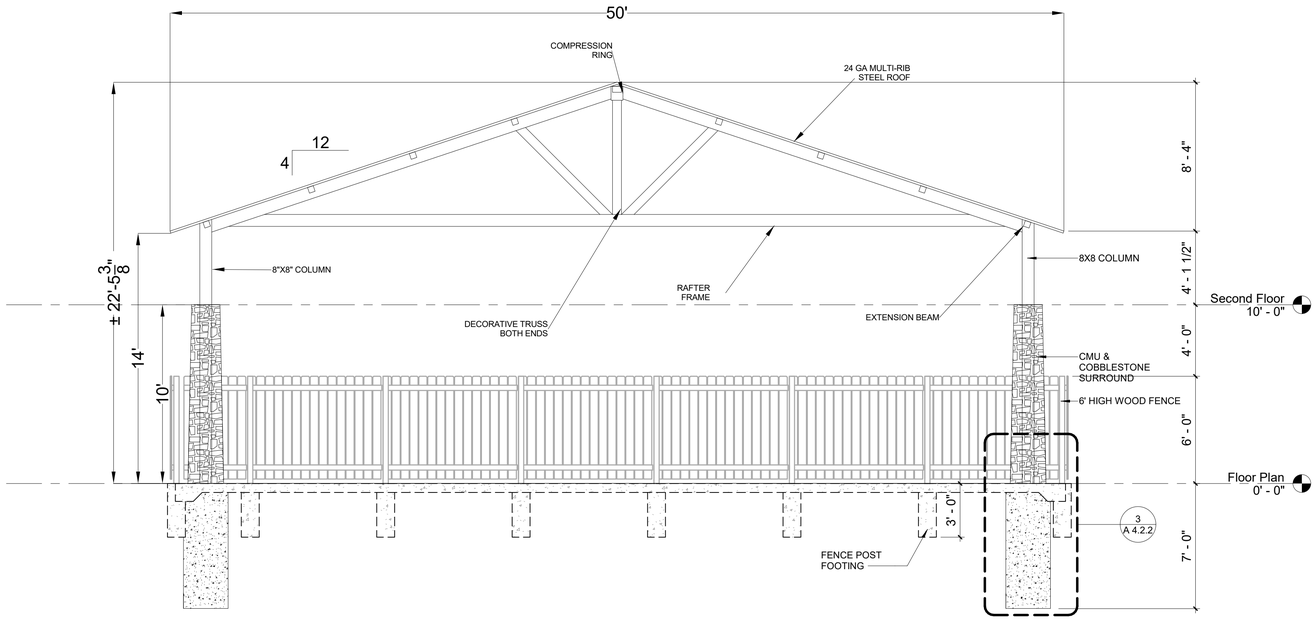

1 **Host Pad Shade Structure Elevation**
1/4" = 1'-0"

SHEET: A 4.2.2

LICENSED ARCHITECT
WARREN W. SCOTT
C-011211
11.30.19
RENEWAL DATE
STATE OF CALIFORNIA

763 2nd Street
Suite 200
Encinitas California
92024
760.943.8180
www.wsaaia.com

WARREN SCOTT + ARCHITECTURE

DEPARTMENT OF PARKS AND RECREATION
COUNTY OF SAN DIEGO
5500 OVERLAND DRIVE, SUITE 410 SAN DIEGO, CALIFORNIA 92123

COUNTY OF SAN DIEGO PARKS AND RECREATION

NO.	REVISIONS	APPR.	DATE
Rev	Description		Date

DESIGNED BY:	WSA
DRAWN BY:	WSA
CHECKED BY:	WSA
PROJECT MANAGER:	IESZIC FORMELLER

LAKESIDE EQUESTRIAN FACILITY

Elevations/ Sections - Host Pad Shade

SCALE	AS SHOWN
PROJ. NO.	1020367
FILE NO.	
SHEET	59
OF	68

E:\OneDrive\WSA - Lakeside Equestrian Center\Construction Drawings\Area 4 Lakeside Equestrian Center_CD's_Area 4.rvt

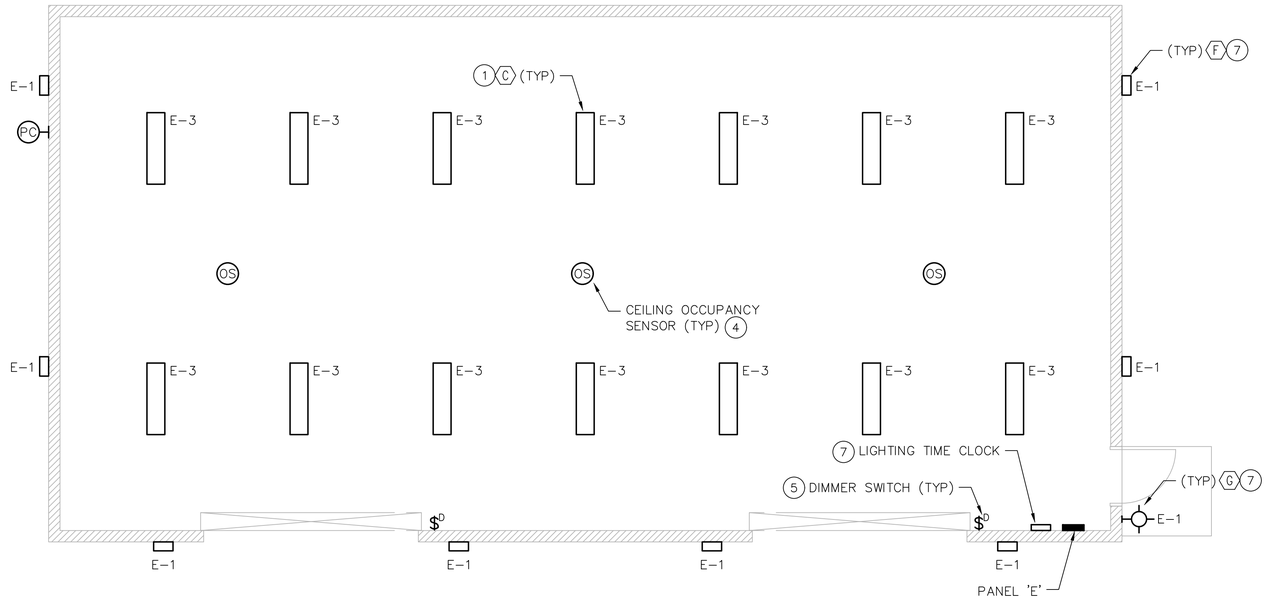

SHOP STORAGE LIGHTING PLAN

SCALE: 1/4" = 1'-0"

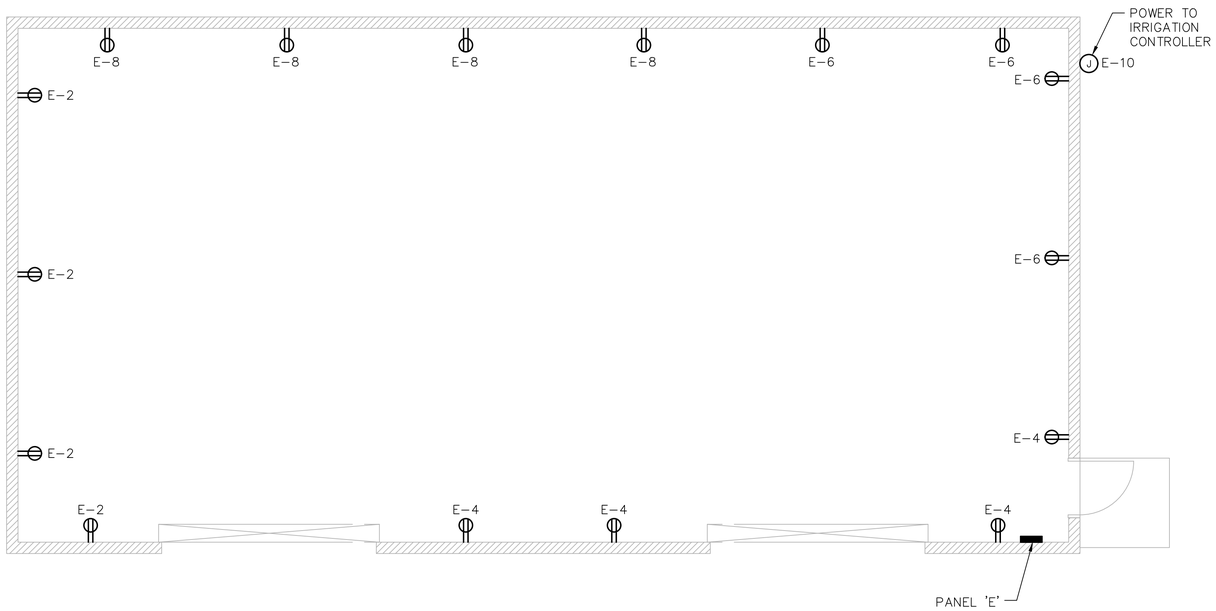

SHOP STORAGE POWER PLAN

SCALE: 1/4" = 1'-0"

NOTES:

1. PENDANT STEM MOUNTED FIXTURE AT APPROX. 10'-0"
2. NOTE NOT USED.
3. NOTE NOT USED.
4. PROVIDE SINGLE OR MULTIPLE CEILING OCCUPANCY SENSORS AS REQUIRED TO CONTROL ALL LIGHTS IN EACH SPACE.
5. PROVIDE LIGHTING DIMMER CONTROLS FOR 0-10V DIMMING OF ALL LIGHTS IN EACH SPACE.
6. NOTE NOT USED.
7. PROVIDE TIME CLOCK AND PHOTOCELL CONTROLS FOR EXTERIOR LIGHTING. SEPARATE CHANNELS FOR WALL PACKS AND DOOR LIGHTS.

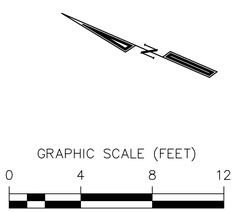

REFER TO CIVIL DRAWINGS FOR ELECTRICAL SITE PLAN, SINGLE LINE DIAGRAM, CONDUIT SCHEDULE, PANEL SCHEDULES AND LIGHT FIXTURE SCHEDULE.

E4.1.1

REGISTERED PROFESSIONAL ENGINEER GERALD L. GREEN No. E15691 Exp. 6/30/20 ELECTRICAL STATE OF CALIFORNIA

MPA
MORAES / PHAM & ASSOCIATES
2131 Palomar Airport Rd. #120
Carlsbad, CA 92011

REGISTERED ENGINEER DATE

DEPARTMENT OF PARKS AND RECREATION
COUNTY OF SAN DIEGO
5500 OVERLAND DRIVE, SUITE 410 SAN DIEGO, CALIFORNIA 92123

COUNTY OF SAN DIEGO PARKS AND RECREATION

NO.	REVISIONS	APPR.	DATE

DESIGNED BY: GG
DRAWN BY: CADD
CHECKED BY: GG
PROJECT MANAGER: XX

LAKESIDE EQUESTRIAN FACILITY
SHOP STORAGE LIGHTING AND POWER PLANS

SCALE: AS SHOWN
PROJ. NO. 1020367
FILE NO.
SHEET 60 OF 68

Z:\Lakeside Equestrian Facility\ELECTRICAL\BLDG-E4.1.1.DWG Wednesday, Feb. 05 2020 12:05pm gerry

-1 0 1 2 3 4 5 6 7 8 9 10

FOR REDUCED PLANS
ORIGINAL SCALE IS IN INCHES

SHEET INDEX - AREA 5:

ARCHITECTURAL
0.0 Title Sheet
A 0.0 Title Sheet
5.0 Site Plan
A 5.0.0 Area 5 - Overall Site Plan
A 5.1.0 Area 5 - Site Plan
5.1 Shade Structure Pavilion
A 5.1.1 Floor Plan - Shade Structure Pavilion
5.2 Site Furnishings
A 5.2.1 SITE FURNISHINGS - TABLE
A 5.2.2 SITE FURNISHINGS - TRASH RECEPTABLE
5.3 Water Truck Filling Station
A 5.3.1 Trash Bin For Horse Manure

ELECTRICAL
Electrical
E 1.2.1 Electrical Schedules

MECHANICAL
Mechanical
M 1.2.1 Mechanical legend and notes

PLUMBING
Plumbing
P 1.2.1 Plumbing Waste

STRUCTURAL
Structural
S 1.2.1 Structural

AREA 5 DAY USE AREA	
NO.	STRUCTURES/ FEATURES
5.1	SHADE STRUCTURE PAVILION 24X24
5.2	PICNIC TABLES (4 EA.)
5.3	TRASH BIN FOR HORSE MANURE

ISSUE FOR BID - 2/03/2020 NOT FOR CONSTRUCTION

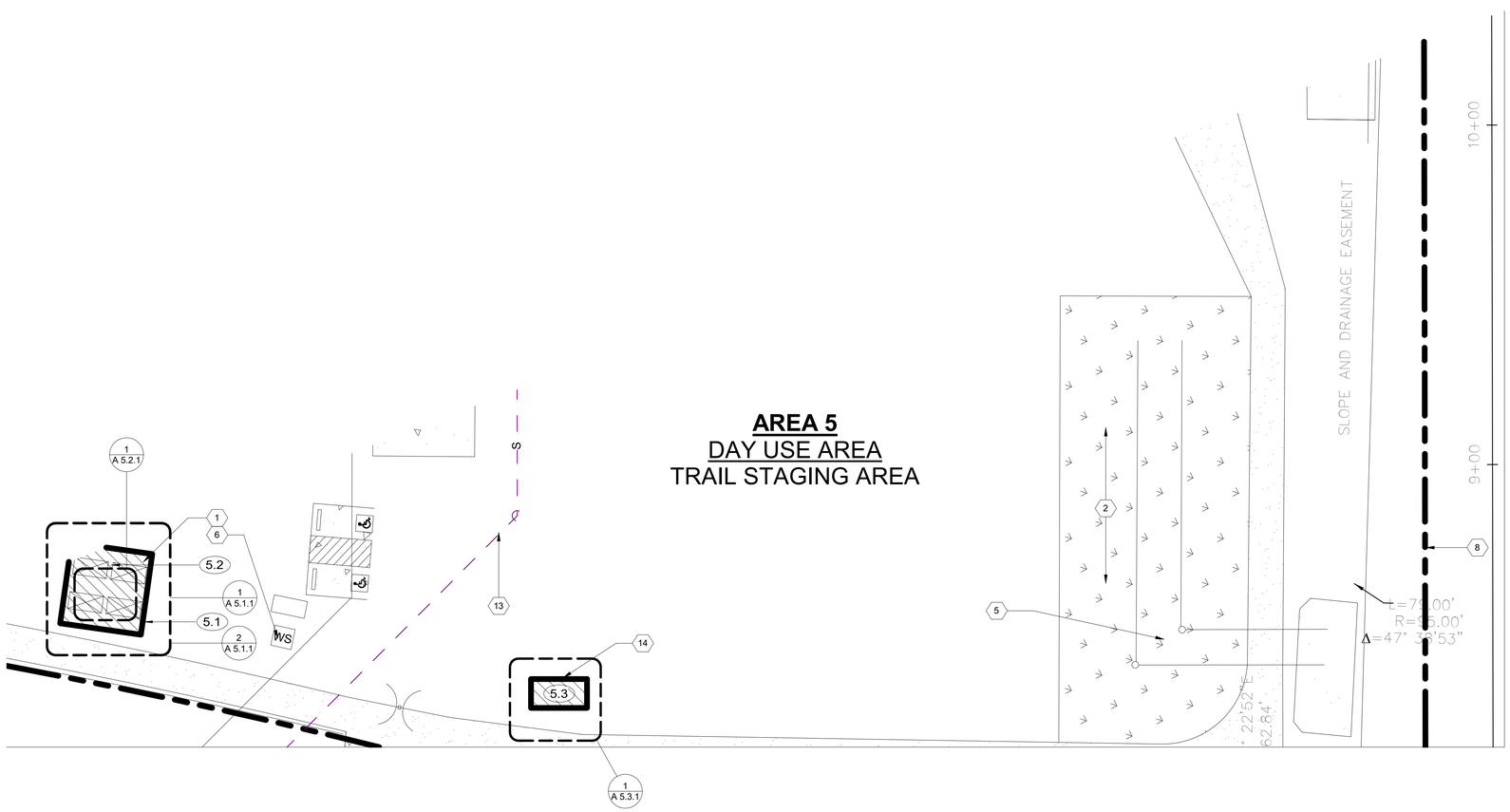

SITE PLAN KEYNOTES:

1. PROPOSED 24'X24' PICNIC TABLES
2. BIOFILTRATION BASIN 3
3. FIRE ACCESS
4. WATER TRUCK FILLING STATION
5. PROPOSED OVERLOW STRUCTURE
6. WATER SPIGOT
7. PROPOSED BOLLARD (TYP.)
8. PROPERTY LINE
9. FENCE (TYPE #1)
10. LANSCAPE AREA
11. PROPOSED BOULDER (TYP.)
12. SOUTH GATE
13. SEWER
14. TRASH BIN FOR HORSE MANURE
15. STORM WATER
16. GAS
17. COUNTY OF SAN DIEGO DAY USE SIGN

SITE PLAN LEGEND:

- NEW PROPOSED BUILDING
- BIOFILTRATION PLANTING
- SLOPE PROTECTION/ OUTLET PROTECTION
- CONCRETE
- DECOMPOSED GRANITE
- PROPERTY LINE
- FENCE (TYPE #1)
- FENCE (TYPE #2)
- CHAINLINK FENCE
- WS - WATER SPIGOT

SHEET: A 5.1.0

North

1 Area 5 Site Plan
1" = 20'-0"

LICENSED ARCHITECT
WARREN W. SCOTT
C-011211
11.30.19 RENEWAL DATE
STATE OF CALIFORNIA

763 2nd Street
Suite 200
Encinitas California
92024
760.943.8180
www.wsaaia.com
WARREN SCOTT + ARCHITECTURE

DEPARTMENT OF PARKS AND RECREATION
COUNTY OF SAN DIEGO
5500 OVERLAND DRIVE, SUITE 410 SAN DIEGO, CALIFORNIA 92123

COUNTY OF SAN DIEGO PARKS AND RECREATION

NO.	REVISIONS	APPR.	DATE
Rev	Description		Date

DESIGNED BY: WSA
DRAWN BY: WSA
CHECKED BY: WSA
PROJECT MANAGER: IESZIC FORMELLER

LAKESIDE EQUESTRIAN FACILITY
Area 5 - Site Plan

SCALE: AS SHOWN
SHEET: 61
PROJ. NO.: 1020367
OF
FILE NO.: 68

E:\ArchDrive\WSA - Lakeside Equestrian Center\Construction Drawings\Area 5\Area 5 WSA-1.rvt

FOR REDUCED PLANS
ORIGINAL SCALE IS IN INCHES

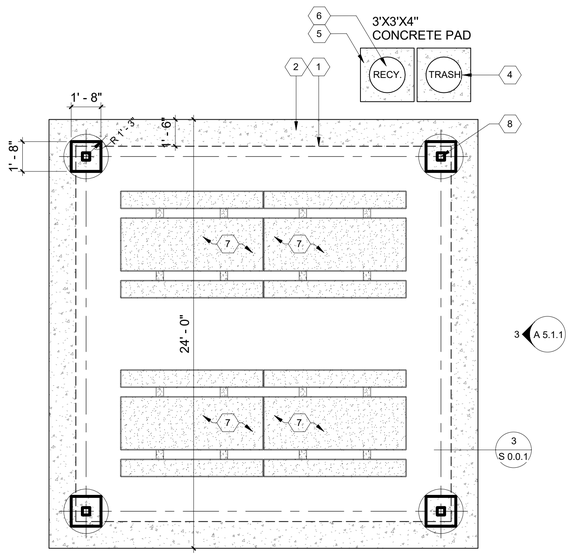

2 **Foundation Plan - Shade Structure Pavilion**
1/4" = 1'-0"

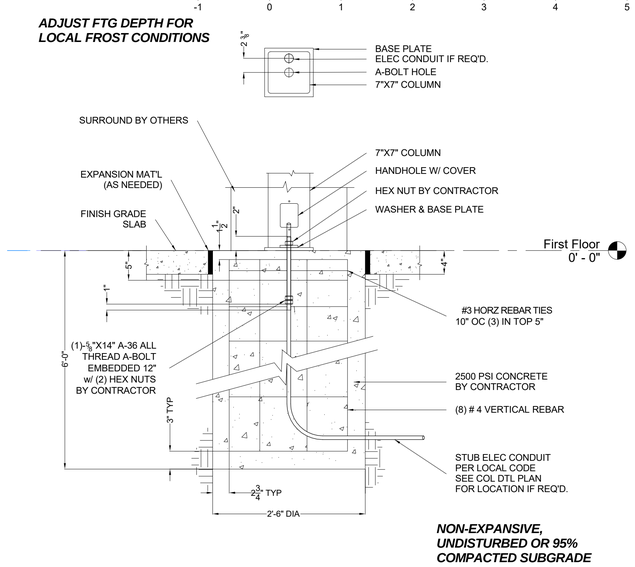

1-BOLT SURFACE MOUNT CAISSON FOOTING
24'X24' ORLANDO MODEL
NTS

4 1-BOLT SURFACE MOUNT CAISSON FOOTING

FOUNDATION PLAN KEYNOTES:

1. 5" CONCRETE SLAB ON GRADE
2. SHADE STRUCTURE
3. 3' - 0" CONCRETE FOOTING
4. 3'X3'X4" CONCRETE PAD
5. TRASH AND RECYCLING
6. CMU & COBBLESTONE
7. PICNIC TABLE X4

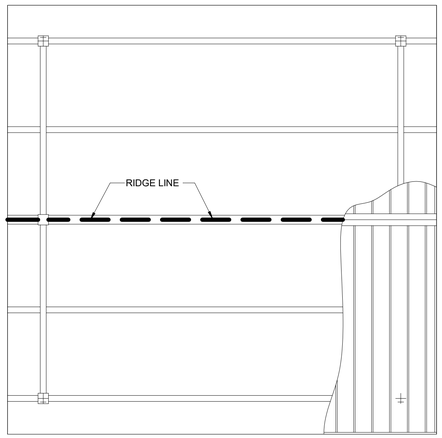

1 **Floor Plan - Shade Structure Pavilion**
1/4" = 1'-0"

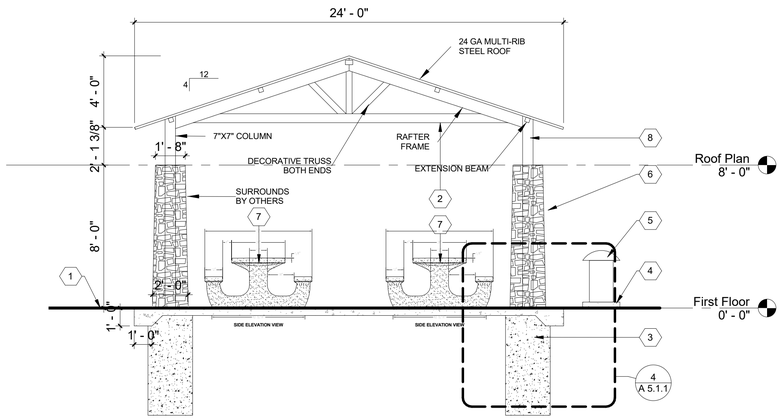

3 **Shade Structure Pavilion Elevation**
1/4" = 1'-0"

SHEET: A 5.1.1

LICENSED ARCHITECT
WARREN W. SCOTT
C-011211
11.30.19
RENEWAL DATE
STATE OF CALIFORNIA

763 2nd Street
Suite 200
Encinitas California
92024
760.943.8180
www.wsaaia.com
WARREN SCOTT + ARCHITECTURE

ISSUE FOR BID - 2/03/2020 NOT FOR CONSTRUCTION

DEPARTMENT OF PARKS AND RECREATION
COUNTY OF SAN DIEGO
5500 OVERLAND DRIVE, SUITE 410 SAN DIEGO, CALIFORNIA 92123

COUNTY OF SAN DIEGO PARKS AND RECREATION

NO.	REVISIONS	APPR.	DATE
Rev	Description		Date

DESIGNED BY: WSA
DRAWN BY: WSA
CHECKED BY: WSA
PROJECT MANAGER: IESZIC FORMELLER

LAKESIDE EQUESTRIAN FACILITY
Floor Plan - Shade Structure
Pavilion

SCALE: AS SHOWN
PROJ. NO. 1020367
FILE NO.
SHEET 62 OF 68

-1 0 1 2 3 4 5 6 7 8 9 10

FOR REDUCED PLANS
ORIGINAL SCALE IS IN INCHES

PRODUCT: Q-LBT-96PT

WEIGHT: 2707 lbs
(CUSTOMER TO OFFLOAD IF OVER 6000 Lbs.)

QUANTITY: _____

CONCRETE COLOR:

- ○ QUAIL HILL RED
- ○ NATURAL
- ○ MISSION WHITE
- ● LATTE
- ○ HARVEST
- ○ FRENCH GREY
- ○ BUNGALOW
- ○ ADOBE TAUPE
- ○ CUSTOM COLOR

CONCRETE TEXTURE:

- ● CRAFTSMANS ETCH
- ○ STRATA

SEALER: STANDARD SEALER

GENERAL PRODUCT NOTES:

E = EXPOSED FINISHED SURFACE
INSTALLATION IS REQUIRED BY OTHERS.
ALL EDGES TO BE EASED.
MANUFACTURING TOLERANCE ±1/4".
5,000 P.S.I. CONCRETE
DISABLED ACCESS COMPLIANT
REINFORCED W/REBAR & NYLON FIBERS
5 YEAR GUARANTEE

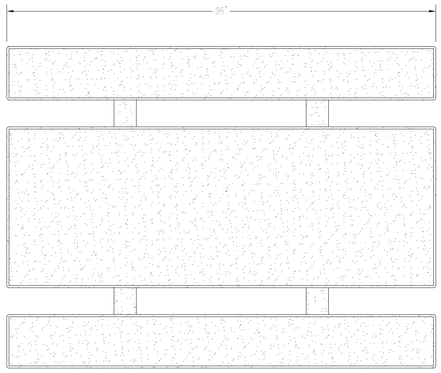

PLAN VIEW

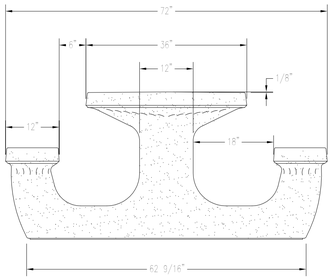

SIDE ELEVATION VIEW

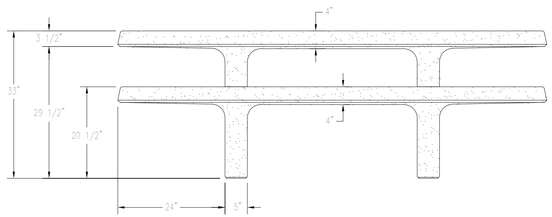

ELEVATION VIEW

1 **Picnic Table Details**
3/4" = 1'-0"

ISSUE FOR BID - 2/03/2020 NOT FOR CONSTRUCTION

SHEET: A 5.2.1

LICENSED ARCHITECT
WARREN W. SCOTT
C-011211
11.30.19
RENEWAL DATE
STATE OF CALIFORNIA

763 2nd Street
Suite 200
Encinitas California
92024
760.943.8180
www.wsaala.com

WARREN SCOTT + ARCHITECTURE

DEPARTMENT OF PARKS AND RECREATION
COUNTY OF SAN DIEGO
5500 OVERLAND DRIVE, SUITE 410 SAN DIEGO, CALIFORNIA 92123

COUNTY OF SAN DIEGO PARKS AND RECREATION

NO.	REVISIONS	APPR.	DATE
Rev	Description		Date

DESIGNED BY: WSA
DRAWN BY: WSA
CHECKED BY: WSA
PROJECT MANAGER: IESZIC FORMELLER

LAKESIDE EQUESTRIAN FACILITY
SITE FURNISHINGS - TABLE

SCALE: AS SHOWN
PROJ. NO.: 1020367
FILE NO.:
SHEET: 63
OF: 68

E:\OneDrive\WSA - Lakeside Equestrian Center\Construction Drawings\Area 5\Lakeside Equestrian Center_CD-1_Area 5-WSA-1.rvt

-1 | 0 | 1 | 2 | 3 | 4 | 5 | 6 | 7 | 8 | 9 | 10

FOR REDUCED PLANS
ORIGINAL SCALE IS IN INCHES

ISSUE FOR BID - 2/03/2020 NOT FOR CONSTRUCTION

- INSTALLATION IS REQUIRED BY OTHERS.
- ALL EDGES TO BE EASED.
- MANUFACTURING TOLERANCE ±1/4".
- PRODUCT: DR-CAL2837W-M24 (NO SWIVEL MECHANISM)
- QUANTITY:
- CONCRETE COLOR:
- CONCRETE TEXTURE:
- SEALER: STANDARD GLOSS SEALER
- LID COLOR:
- LID MATERIAL: STEEL
- STD. 27"DIA. DRAIN HOLE
- STD. COLOR & TEXTURE OPTIONS

623
APROX. WT. LBS.
(CUSTOMER TO OFFLOAD IF OVER 6000 Lbs.)

Authorized Signature Date
By signing above or stamping this drawing "approved" or "no exception taken" authorization is given for Quick Crete to produce this drawing as shown within a 1/4" tolerance.

LID COLORS
(Lid color may vary from screen to printer to monitor)

STANDARD	PREMIUM
BLACK	RED
GRAY	BURGUNDY
BROWN	GREEN
BLUE	IVORY

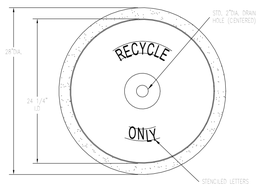

PLAN VIEW

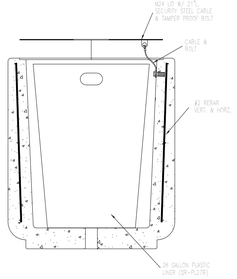

SECTION VIEW

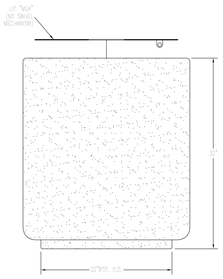

ELEVATION VIEW

1 Recycling Receptacle - Details

- INSTALLATION IS REQUIRED BY OTHERS.
- ALL EDGES TO BE EASED.
- MANUFACTURING TOLERANCE ±1/4".
- PRODUCT: DR-CALPSTW-HORSE
- QUANTITY:
- CONCRETE COLOR:
- CONCRETE TEXTURE:
- SEALER: STANDARD GLOSS SEALER
- LID COLOR:
- LID MATERIAL: STEEL
- STD. 27"DIA. DRAIN HOLE
- STD. COLOR & TEXTURE OPTIONS

623
APROX. WT. Lbs.
(CUSTOMER TO OFFLOAD IF OVER 6000 Lbs.)

Authorized Signature Date
By signing above or stamping this drawing "approved" or "no exception taken" authorization is given for Quick Crete to produce this drawing as shown within a 1/4" tolerance.

E = EXPOSED FINISHED SURFACE

LID COLORS
(Lid color may vary from screen to printer to monitor)

STANDARD	PREMIUM
BLACK	RED
GRAY	BURGUNDY
BROWN	GREEN
BLUE	IVORY

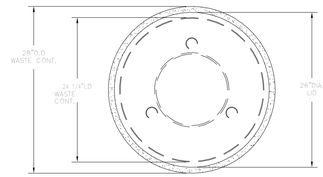

PLAN VIEW

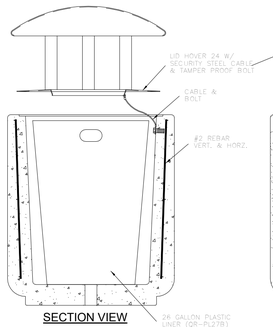

SECTION VIEW

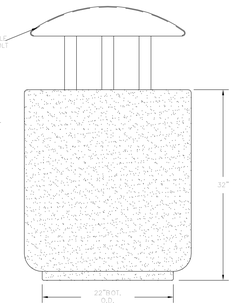

ELEVATION VIEW

2 Trash Receptacle - Details

SHEET: A 5.2.2

LICENSED ARCHITECT
WARREN W. SCOTT
C-011211
11.30.19
RENEWAL DATE
STATE OF CALIFORNIA

763 2nd Street
Suite 200
Encinitas California
92024
760.943.8180
www.wsaala.com

WARREN SCOTT + ARCHITECTURE

DEPARTMENT OF PARKS AND RECREATION
COUNTY OF SAN DIEGO
5500 OVERLAND DRIVE, SUITE 410 SAN DIEGO, CALIFORNIA 92123

COUNTY OF SAN DIEGO PARKS AND RECREATION

NO.	REVISIONS	APPR.	DATE
Rev	Description		Date

DESIGNED BY: WSA
DRAWN BY: WSA
CHECKED BY: WSA
PROJECT MANAGER: IESZIC FORMELLER

LAKESIDE EQUESTRIAN FACILITY
SITE FURNISHINGS - TRASH RECEPTABLE

SCALE: AS SHOWN
SHEET: 64
PROJ. NO.: 1020367
OF
FILE NO.: 68

E:\OneDrive\WSA - Lakeside Equestrian Center\Construction Drawings\Area Studies\Lakeside Equestrian Center_CD-1_Area-4-WSA-1.rvt

FOR REDUCED PLANS
ORIGINAL SCALE IS IN INCHES

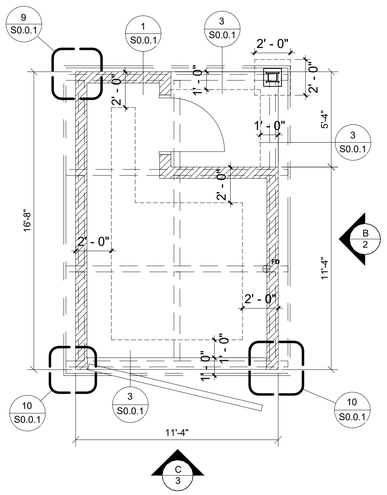

1 **Single Trash - Plan View**
1/4" = 1'-0"

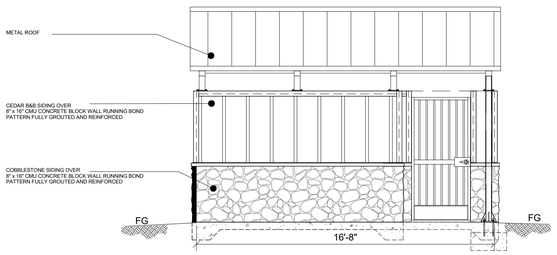

2 **Single Trash - Elevation B**
1/4" = 1'-0"

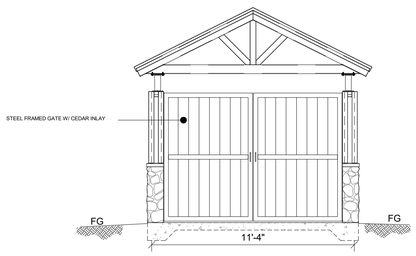

3 **Single Trash - Elevation C**
1/4" = 1'-0"

ISSUE FOR BID - 2/03/2020 NOT FOR CONSTRUCTION

SHEET: A 5.3.1

LICENSED ARCHITECT
WARREN W. SCOTT
C-011211
11.30.19
RENEWAL DATE
STATE OF CALIFORNIA

763 2nd Street
Suite 200
Encinitas California
92024
760.943.8180
www.wsaaia.com
WARREN SCOTT + ARCHITECTURE

DEPARTMENT OF PARKS AND RECREATION
COUNTY OF SAN DIEGO
5500 OVERLAND DRIVE, SUITE 410 SAN DIEGO, CALIFORNIA 92123

COUNTY OF SAN DIEGO PARKS AND RECREATION

NO.	REVISIONS	APPR.	DATE
Rev	Description		Date

DESIGNED BY: WSA
DRAWN BY: WSA
CHECKED BY: WSA
PROJECT MANAGER: IESZIC FORMELLER

LAKESIDE EQUESTRIAN FACILITY
Trash Bin For Horse Manure

SCALE: AS SHOWN
PROJ. NO. 1020367
FILE NO.
SHEET 64 OF 68

E:\OneDrive\WSA - Lakeside Equestrian Center\Construction Drawings\Area 5\Lakeside Equestrian Center_CD-1_Area-5-WSA-1.rvt

FOR REDUCED PLANS
ORIGINAL SCALE IS IN INCHES

AREA 6

6.2	DAY USE SIGNAGE
6.3	COUNTY PARK MONUMENT SIGNAGE
6.4	GRAND ENTRANCE ARCHSIGN

INDEX OF SHEETS: AREA 6

ARCHITECTURAL
6.1 Site Plan
A 6.1.0 Area 6 - Site Plan

6.2 County Day Use Sign
A 6.3.1 Details - County Monument Signage

6.4 Entry Gate
A 6.4.1 Entry Gate Details

STRUCTURAL
Structural
S 6.1.1 Structural

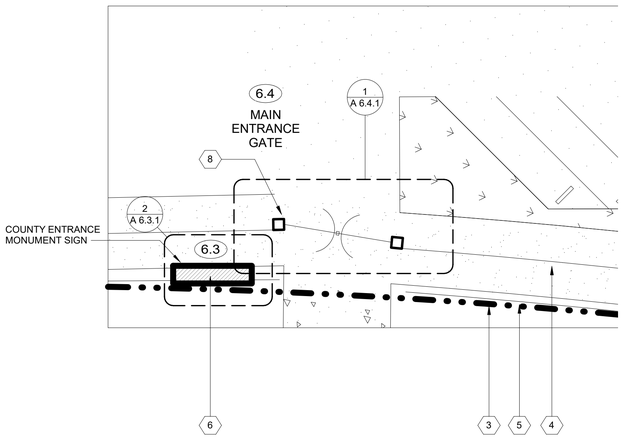

1 **Area 6 Site Plan - Left Part**
1" = 20'-0"

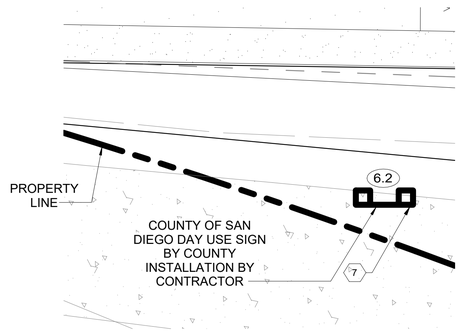

2 **Area 6 Site Plan - Right Part**
1" = 20'-0"

SITE PLAN KEYNOTES:

1. PROPOSED PARKING LOTS
2. PROPOSED BOLLARD (TYP.)
3. PROPERTY LINE
4. FENCE (TYPE #1)
5. FENCE (TYPE #2)
6. COUNTY OF SAN DIEGO ENTRANCE MONUMENT
7. COUNTY OF SAN DIEGO DAY USE SIGN
8. MAIN ENTRANCE SIGN

SITE PLAN LEGEND:

- PROPOSED STRUCTURE
- BIOFILTRATION & PLANTING AREA PER CIVIL
- CONCRETE PER CIVIL
- PROPERTY LINE
- FENCE (TYPE #1)
- FENCE (TYPE #2)

SHEET: A 6.1.0

North

LICENSED ARCHITECT
WARREN W. SCOTT
C-011211
11.30.19
RENEWAL DATE
STATE OF CALIFORNIA

763 2nd Street
Suite 200
Encinitas California
92024
760.943.8180
www.wsaaia.com
WARREN SCOTT + ARCHITECTURE

ISSUE FOR BID - 2/03/2020 NOT FOR CONSTRUCTION

E:\OneDrive\WSA - Lakeside Equestrian Center\Construction Drawings\Area 6\Lakeside Equestrian Center_CD-1_Area 6 - RB.rvt

DEPARTMENT OF PARKS AND RECREATION
COUNTY OF SAN DIEGO
5500 OVERLAND DRIVE, SUITE 410 SAN DIEGO, CALIFORNIA 92123

COUNTY OF SAN DIEGO PARKS AND RECREATION

NO.	REVISIONS	APPR.	DATE
Rev	Description		Date

DESIGNED BY: WSA
DRAWN BY: WSA
CHECKED BY: WSA
PROJECT MANAGER: IESZIC FORMELLER

LAKESIDE EQUESTRIAN FACILITY
Area 6 - Site Plan

SCALE: AS SHOWN
PROJ. NO.: 1020367
FILE NO.:
SHEET: 66 OF 68

-1 0 1 2 3 4 5 6 7 8 9 10

FOR REDUCED PLANS
ORIGINAL SCALE IS IN INCHES



FRONT ELEVATION

LEGEND:

1. ONE PIECE GRANITE SIGN, 4" x 5' x 3'. SEE LOCAL PARK GRANITE SIGN DETAIL.
2. 3/4" DIAMETER HOLES WITH #4 REBAR PINS SECURED WITH 50 YEAR SILICONE ADHESIVE TYP.
3. STEEL U-CHANNEL - .3/16" THICK, 4.5" I.D. WIDE, 2" DEEP, LENGTH AS REQUIRED. APPLY 50 YEAR SILICONE ADHESIVE BETWEEN GRANITE SIGN & U-CHANNEL
4. CONCRETE FOOTING, 250-C-2500
5. #4 REBAR REINFORCEMENT @ 16" O.C. MAX.
6. FINISH GRADE
7. 95% COMPACTED SUBGRADE
8. CONCRETE LEG SUPPORTS

NOTES:

A. PARK TEXT SIDES OF GRANITE SHALL BE POLISHED. VERIFY WITH COUNTY ON 1-SIDED OR 2-SIDED PARK TEXT SIGN. PARKS AND REC LOGO AREA, BACK (IF 1-SIDED), AND SIDES OF SIGN SHALL BE RUBBED AND SANDED. SEE LOCAL PARK GRANITE SIGN DETAIL FOR MORE INFORMATION.
B. ALL EDGES OF GRANITE SHALL BE .125" CHAMFERED.
C. WHERE REBAR PINS ARE SHOWN, GRANITE SHALL HAVE 3/4" DIAMETER DRILL HOLES 4" DEEP.
D. SCALED SHOP DRAWINGS FOR SIGN SHALL BE SUBMITTED FOR COUNTY APPROVAL PRIOR TO ORDERING.
E. CONFIRM SURFACE AREA TREATMENTS AROUND SIGN AREA PRIOR TO SUBMITTING SHOP DRAWINGS.

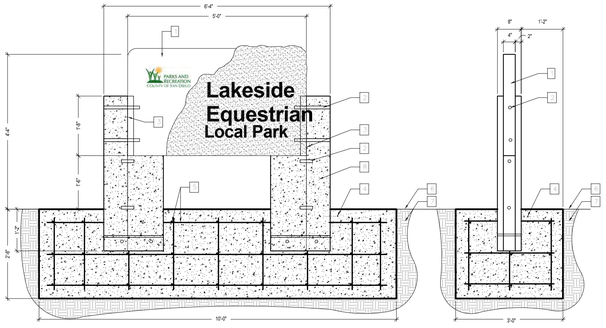

FRONT SECTION

SIDE SECTION

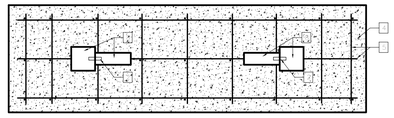

TOP SECTION

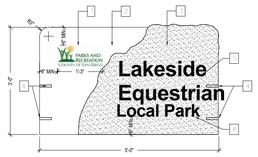

LEGEND

1. ENGRAVED AND PAINTED COUNTY OF SAN DIEGO PARKS AND RECREATION LOGO - LOGO PROVIDED BY COUNTY. MIN. 6" CLEAR FROM EDGE OF SIGN.
2. GRANITE SIGN, 4" THICK, 5' x 3'. COLOR: 'MOUNTAIN GREEN' WITH 'RUBBED AND SANDED' FINISH. GRANITE SIGN AVAILABLE THROUGH COLDSPRINGS. (800) 328-5040, www.coldspringsusa.com.
3. SHADED AREA OF SIGN TO BE COLOR: 'MOUNTAIN GREEN' WITH A 'POLISH' FINISH.
4. DRILL 3/4" DIAMETER HOLES 4" DEEP IN GRANITE FOR REBAR PINS WHEN ATTACHED TO POSTS.
5. ALL PARK NAME TEXT SHALL BE ENGRAVED AND WHITE LITHOCHROME. FONT SHALL BE: MAIANDRA GD - 5" OR 6" TALL AND CENTERED IN POLISHED AREA OF SIGN. TEXT HEIGHT WILL VARY DEPENDING ON LENGTH OF PARK NAME. SUBMIT SCALED DRAWINGS TO SHOW ACCURATE TEXT HEIGHT.
6. 'LOCAL PARK' TEXT SHALL BE ENGRAVED IN WHITE LITHOCHROME. FONT SHALL BE ARIAL 4" TALL, CENTERED BELOW NAME OF PARK.

GRANITE SIGN NOTES:

1. PARK TEXT SIDES OF GRANITE (SHADED AREA) SHALL BE POLISHED. VERIFY WITH COUNTY ON 1-SIDED OR 2-SIDED PARK TEXT SIGN. PARKS AND REC LOGO AREA, BACK (IF 1-SIDED), AND SIDES OF SIGN SHALL BE RUBBED AND SANDED.
2. ALL EDGES OF GRANITE SHALL BE .125" CHAMFERED
3. SCALED SHOP DRAWINGS FOR SIGN SHALL BE SUBMITTED FOR COUNTY APPROVAL PRIOR TO ORDERING.
4. SEE ADDITIONAL DETAILS FOR ATTACHMENT TO POSTS.

GRANITE SIGN AVAILABLE FROM:
COLDSPRINGS
(800) 328-5040
www.coldspringsusa.com

A 3'x5' GRANITE SIGN FOR LOCAL PARKS
SCALE:

2 **Signage Detail - County of San Diego Entrance Monument Sign**
1/2" = 1'-0"

ISSUE FOR BID - 2/03/2020 NOT FOR CONSTRUCTION

SHEET: A 6.3.1

LICENSED ARCHITECT
WARREN W. SCOTT
C-011211
11.30.19
RENEWAL DATE
STATE OF CALIFORNIA

763 2nd Street
Suite 200
Encinitas California
92024
760.943.8180
www.wsaala.com

WARREN SCOTT + ARCHITECTURE

DEPARTMENT OF PARKS AND RECREATION
COUNTY OF SAN DIEGO
5500 OVERLAND DRIVE, SUITE 410 SAN DIEGO, CALIFORNIA 92123

COUNTY OF SAN DIEGO PARKS AND RECREATION

NO.	REVISIONS	APPR.	DATE
Rev	Description		Date

DESIGNED BY: WSA
DRAWN BY: WSA
CHECKED BY: WSA
PROJECT MANAGER: IESZIC FORMELLER

LAKESIDE EQUESTRIAN FACILITY

Details - County Monument Signage

SCALE: AS SHOWN
PROJ. NO.: 1020367
FILE NO.:
SHEET: 67
OF: 68

E:\OneDrive\WSA - Lakeside Equestrian Center\Construction Drawings\Area 6\Lakeside Equestrian Center_CD-1_Library - R20.rvt

-1 0 1 2 3 4 5 6 7 8 9 10

FOR REDUCED PLANS
ORIGINAL SCALE IS IN INCHES

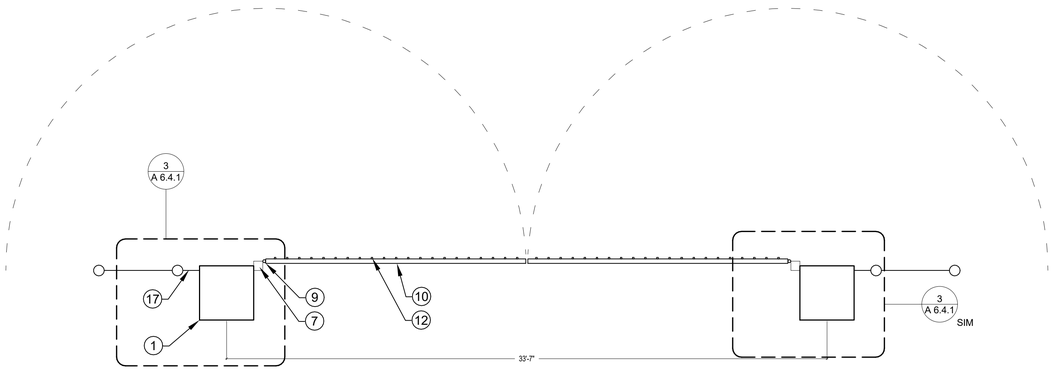

1 Entry Gate - Plan

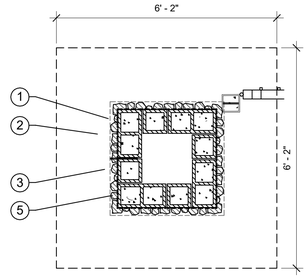

3 Entry Gate - Plan -

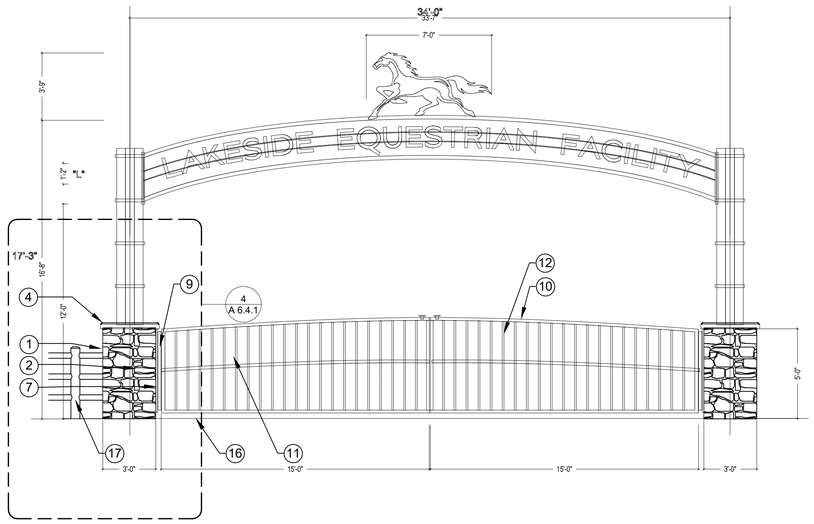

2 Entry Gate - Elevation

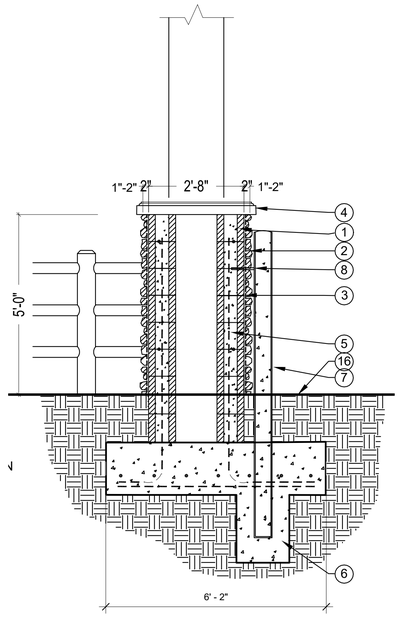

4 Entry Gate - Elevation -

KEYNOTES:

1. 32" SQ. x 10' CMU GATE COLUMN, GROUT ALL CELLS SOLID
2. STONE VENEER, ELDORADO STONE RUSTIC LEDGE, CASCADE COLOR RANGE, SIENA PRODUCTS POLYMER-ENHANCED GROUT #G28 PARCHMENT
3. 2.5 LB. GALV. LATH
4. PRECAST COLUMN CAP, LITE STONE #PC5-40, DAVIS #6804 CLIFFSIDE BROWN INTEGRAL COLOR, EPOXY TO COLUMN
5. REINFORCEMENT PER SHOP DRAWING STRUCTURAL ENGINEER
6. FOOTING PER SHOP DRAWING STRUCTURAL ENGINEER
7. 6" DIA. HSS GATE POST WITH GROUT FILL
8. POST ANCHOR PER PER SHOP DRAWING STRUCTURAL ENGINEER
9. HEAVY DUTY HINGES PER SHOP DRAWING STRUCTURAL ENGINEER
10. HSS GATE FRAME PER SHOP DRAWING STRUCTURAL ENGINEER
11. HSS GATE RAIL PER SHOP DRAWING STRUCTURAL ENGINEER
12. GATE PICKETT, 1-INCH TUBULAR STEEL, 14 GA, @ 8 INCHES ON CENTER
13. CAST IRON PICKETT DECORATIVE SPEAR, JENSEN #217-1
14. 1/2-INCH GALVANIZED HEAVY DUTY LOCKABLE SLIDE BOLT AND RECEIVER
15. 1/2-INCH GALVANIZED HEAVY DUTY LOCKABLE CANE BOLT AND RECEIVER
16. FINISH GRADE
17. PEELER POLE POST AND RAIL FENCE

ENTRY GATE NOTES:

1. THIS DETAIL IS SCHEMATIC ONLY. PRIOR TO FABRICATION OR INSTALLING, THE CONTRACTOR SHALL PROVIDE SHOP DRAWING DESIGN CALCULATIONS, PLANS, DETAILS, AND SPECIFICATIONS TO BE SUBMITTED TO AND APPROVED BY THE COUNTY OF SAN DIEGO PARKS AND RECREATION DEPARTMENT.
2. PLANS FOR THE SEPARATE BUILDING PERMIT SHALL BE SUBMITTED IN A TIMELY MANNER THAT ALLOWS A MINIMUM OF 30 WORKING DAYS FOR INITIAL PLAN REVIEW. ALL COMMENTS RELATED TO THE SEPARATE PERMIT SUBMITTAL MUST BE ADDRESSED TO THE SATISFACTION OF THE PLAN CHECK DIVISION PRIOR TO APPROVAL OF THE SUBMITTAL ITEMS.
3. THESE DRAWINGS ARE FOR REFERENCE ONLY. FOR CONSTRUCTION, USE ONLY APPROVED AND PERFORATED BUILDING PERMIT PLAN SETS.
4. ALL STEEL SHALL BE DOMESTIC MADE ASTM A500 COLD-ROLLED STEEL GALVANIZED INSIDE AND OUT PER ASTM A123.
5. AFTER FABRICATION, GRIND ALL WELDS TO BARE METAL AND COAT WITH NO. 321 PROLINE COLD GALVANIZING OR APPROVED EQUAL.
6. ALL PAINTING SHALL BE SHOP APPLIED. FIELD PAINTING WILL BE PERMITTED ONLY ON CAPS, FINIALS AND SCRATCHES.
7. FINISH FOR GATE, POST AND ALL HARDWARE SHALL BE A HIGH PERFORMANCE ZINC-RICH PRIMER, INTERMEDIATE AND TOP COAT SYSTEM DESIGNED FOR GALVANIZED STEEL, COLOR TO BE GLOSS BLACK.
8. FOOTING TO BE POURED AGAINST UNDISTURBED SOIL OR RECOMPACTED SOIL PER STRUCTURAL SOILS REPORT RECOMMENDATIONS.

SHEET: A 6.4.1

ISSUE FOR BID - 2/03/2020 NOT FOR CONSTRUCTION

LICENSED ARCHITECT
WARREN W. SCOTT
C-011211
11.30.19 RENEWAL DATE
STATE OF CALIFORNIA

763 2nd Street
Suite 200
Encinitas California
92024
760.943.8180
www.wsaala.com

WARREN SCOTT + ARCHITECTURE

DEPARTMENT OF PARKS AND RECREATION
COUNTY OF SAN DIEGO
5500 OVERLAND DRIVE, SUITE 410 SAN DIEGO, CALIFORNIA 92123

COUNTY OF SAN DIEGO PARKS AND RECREATION

NO.	REVISIONS	APPR.	DATE
Rev	Description		Date

DESIGNED BY:	WSA
DRAWN BY:	WSA
CHECKED BY:	WSA
PROJECT MANAGER:	IESZIC FORMELLER

LAKESIDE EQUESTRIAN FACILITY

Entry Gate Details

SCALE	AS SHOWN
PROJ. NO.	1020367
FILE NO.	
SHEET	68
OF	68

E:\OneDrive\WSA - Lakeside Equestrian Center\Construction Drawings\Arch Ex\Lakeside Equestrian Center_CD1_Arch Ex_R20.rvt